Project Manual
Volume 1 of 2

Erie International Airport
Passenger Boarding Bridge
Gate 3

Prepared for

ERIE INTERNATIONAL AIRPORT
TOM RIDGE FIELD

Mead and Hunt, Inc. 3225600-201731.01

Prepared by

Mead & Hunt

Pyramid Engineering, PC

KTH ARCHITECTS

www.meadhunt.com

February 18, 2021 – Bid Set

WARNING: THIS RECORD CONTAINS SENSITIVE SECURITY INFORMATION THAT IS CONTROLLED IN 49 CFR PART 1520. NO PART OF THIS RECORD MAY BE DISCLOSED TO PERSONS WITHOUT A "NEED TO KNOW", AS DIRECTED IN 49 CFR PART 1520, EXCEPT WITH THE WRITTEN PERMISSION OF THE ADMINISTRATOR OR THE TRANSPORTATION SECURITY ADMINISTRATION OR THE SECRETARY OF TRANSPORTATION. UNAUTHORIZED RELEASE MAY RESULT IN CIVIL PENALTY OR OTHER ACTION. FOR US GOVERNMENT AGENCIES, PUBLIC DISCLOSURE IS GOVERNED BY 5 USC 552 AND 49 CRF PART 1520.' ALL OTHER DOCUMENTS SHALL BE MARKED OFFICIAL USE ONLY – PUBLIC AVAILABILITY TO BE DETERMINED UNDER 5 USC 552.

Page intentionally left blank for printing purposes

TABLE OF CONTENTS

Advertisement for Bids 5
Type of Work, Project Location and Schedule 7
Contract Proposal 9
Instructions to Bidders 11
Price Form …. 13
Acknowledgements by Bidder 17
DBE Utilization Statement 23
DBE Letter of Intent 25
Certification Buy American, Total Facility 27
Certification of Bidder Regarding Tax Delinquency and Felony Convictions 29
Certification Trade Restriction 31
Certification Lobbying 33
Non-Collison Affidavit 35
Contractor's Certification of Non-Segregated Facilities 39
Public Works Employment Verification Form 41
Protest-Dispute Procedures 43
General Provisions 45
AIA General Provisions 89
Federal Requirements 131
Special Provisions 161
Supplemental Information – Geotechnical Engineering Report 173
Federal (Davis-Bacon) Wage Rates 205

See Volume 2 for Technical Specifications

Page intentionally left blank for printing purposes

ADVERTISEMENT FOR BIDS

Erie International Airport will receive sealed bids for the **Erie International Airport , Passenger Boarding Bridge – Gate 3, at the Erie International Airport, Erie, PA until 10:30 am (local time) Thursday, March 18, 2021**. Bids received after the stated time will not be accepted. Bids will be publicly opened and read aloud immediately following the time stated above.

Bidders shall submit with their bid, evidence of qualifications meeting the requirements of General Provisions 20-02. PennDOT prequalification is an acceptable form of evidence.

There is zero (0%) percent DBE requirement for this project.

Bids shall be addressed to the **Erie International Airport, Tom Ridge Field, 4411 West 12th Street, Erie, PA 16505-0393**, **Attn: Kimberlie Scharrer** sealed and shall have the name and address of the bidder clearly marked on the outside of the envelope. The envelope shall also be marked with the following: **Erie International Airport, Passenger Boarding Bridge – Gate 3, Erie International Airport, Erie, PA**. Bids must be submitted on the bid forms (provided in the proposal).

Bidders will submit a proposal guaranty in the form of a proposal bond (preferred), certified check, cashier's check or bank money order, in the amount of not less than five (5) percent of the bid sum. The proposal guaranty shall be made payable to Erie International Airport. If the selected contractor fails to provide the required materials and/or execute the contract within fifteen (15) days after being furnished with the necessary contract and bond forms, the proposal guaranty will be forfeited to the Sponsor. The successful bidder will be required to furnish satisfactory 100 percent performance bond as well as labor and material bond.

No bid may be withdrawn after closing time for the receipt of proposals for a period of Forty Nine (49) calendar days.

Erie International Airport reserves the right to reject any and all bids, and to waive any informalities in bidding or to accept the bids or bid, should it consider same to be in its best interest.

A pre-bid meeting is scheduled for Tuesday, March 2, 2021, 10am (local time) at the Airport waiting room. This meeting is recommended but not mandatory.

Scope of Work
The purpose of the project is the construction of architectural, structural, and electrical modifications for acceptance of a passenger board bridge (NTC).

The project shall be complete and ready for final inspection within One Hundred Twenty (120) calendar days from the effective date of Notice-to-Proceed.

Availability of Documents
Complete digital project bidding documents will be available beginning at 3:00 pm, Wednesday, February 17, 2021, 2021 at https://www.erieairport.org/doing-business-with-the-authority/business-opportunities/

A virtual (micosoft teams) Bid Document Workshop will be presented Tuesday March 16, 2021, 10am (local time), join the meeting with this link Click here to join the meeting. **This meeting is recommended but not mandatory.**

Questions about the project should be directed to Richard Lundeen, Mead & Hunt Inc. 2440 Deming Way, Middleton, WI 53562, 608-443-0529, richard.lundeen@meadhunt.com

This project is being funded in part by Federal Aviation Administration, State of Pennsylvania and Erie International Airport. All bidders are required to comply with applicable Federal and State laws and regulations.

Affirmative Action Requirement (41 CFR part 60-4, Executive Order 11246)

Notice of Requirement for Affirmative Action To Ensure Equal Employment Opportunity

1. The Offeror's or Bidder's attention is called to the "Equal Opportunity Clause" and the "Standard Federal Equal Employment Opportunity Construction Contract Specifications".
2. The goals and timetables for minority and female participation, expressed in percentage terms for the Contractor's aggregate workforce in each trade on all construction work in the covered area as outlined in the Required Federal Contract Provisions for FAA Airport Improvement Program Projects.

Civil Rights-Title Assurance (49 USC § 47123, FAA Order 1400.11)

Title VI Solicitation Notice

The Erie International AIrport, in accordance with the provisions of Title VI of the Civil Rights Act of 1964 (78 Stat. 252, 42 USC §§ 2000d to 2000d-4) and the Regulations, hereby notifies all bidders or offerors that it will affirmatively ensure that any contract entered into pursuant to this advertisement, select disadvantaged business enterprises will be afforded full and fair opportunity to submit bids in response to this invitation and will not be discriminated against on the grounds of race, color, or national origin in consideration for an award. The contract, if awarded, will be subject to the following:

Buy American Preference
(Title 49 USC § 50101)

Davis-Bacon Requirements
(2 CFR § 200, Appendix II(D), 29 CFR Part 5)

Debarment and Suspension
(2 CFR part 180 (Subpart C). 2 CFR part 1200, DOT Order 4200.5)

Disadvantaged Business Enterprise
(49 CFR part 26)

Trade Restriction Certification
(49 USC § 50104, 49 CFR part 30)

Lobbying and Influencing Federal Employees
(31 USC § 1352 – Byrd Anti-Lobbying Amendment, 2 CFR part 200, Appendix II(J), 49 CFR part 20, Appendix A)

Procurement of Recovered Materials
(2 CFR § 200.322, 40 CFR part 247, Solid Waste Disposal Act)

TYPE OF WORK, PROJECT LOCATION AND SCHEDULE

Mead & Hunt Project No.
3225600-201731.01

Work Description
Construction of architectural, structural, and electrical modifications for acceptance of a passenger board bridge (NTC).

Type of Contract
Project will be constructed under coordinated, concurrent multiple contracts. See Section 011200 "Multiple Contract Summary" for a description of work included under each of the multiple contracts and for the responsibilities of Project coordinator. Contracts for this Project include the following:

C-1: General: A separate contract will be awarded to a General Contractor for general building.

C-4: Electrical Construction: A separate contract will be awarded to an Electrical Contractor for the construction of electrical, and data equipment and distribution systems.

Work Location
The work will be accomplished at the Erie International Airport

Airport Sponsor/Owner
Erie International Airport

Consultant – Mead & Hunt, Inc.
Questions regarding the contract, plans and specifications should be directed to:

Richard Lundeen
Mead & Hunt, Inc.
2440 Deming Way
Middleton, WI 53562
608-443-0529
richard.lundeen@meadhunt.com

The contractor is responsible for visiting the airport in order to assess the job site. Site visits can be arranged by contacting Mr. Ian Bogle. ibogle@erieairport.org

Liquidated Damages

Liquidated Damages in the amount of $500.00 shall be assessed for each calendar day construction exceeds 120 calendar days for the total project, and/or $500.00 for each calendar day work on a particular phase exceeds the contract time allotted for that phase.

Schedule
The project is expected to start on April 1, 2021

The contract time for this project will be One Hundred Twenty (120) calendar days.

Page intentionally left blank for printing purposes

Contract Proposal

Federal No.: TBD

To: Erie International Airport
Erie, Pennsylvania

The undersigned, in compliance with the request for bids for construction of the following Project

PASSENGER BOARDING BRIDGE – GATE 3

hereby proposes to furnish all labor, permits, material, machinery, tools, supplies and equipment to faithfully perform all work required for construction of the Project in accordance with the Project Manual, Project Drawings and issued Addenda within the specified time of performance for the following prices:

Refer to following pages:

BIDDER MUST SUBMIT THE FOLLOWING ITEMS WITH BID:
The following documents are to be attached and made a part of this Bid

1. Bid Guaranty in the form of proposal bond/cashier's check/certified check – 5%
2. Bid Form
3. Acknowledgements by Bidder
4. Signature of Bidder
5. Completed DBE forms "Utilization Statement" and "Letter of Intent"
6. Buy America Certification(s) - "Manufactured Products" and "Total Facility"
7. Trade Restriction Certification
8. Tax Delinquency and Felony Convictions
9. Certification Regarding Lobbying
10. Non-Collison Affidavit
11. Contractor's Certification of Non-Segregated Facilities
12. Commonwealth of Pennsylvania – Public Works Employment Verification Form
13. Evidence of good faith efforts required by 49 CFR Part 26, Appendix A. If proposed DBE goal is met, submittal of evidence of good faith efforts is not required
14. Evidence of BIDDER'S qualifications per the requirements of General Provisions, Section 20-02 Qualification of Bidders. **Provide items a thru d or Penn DOT Prequalification**
    a) Experience
    b) Equipment
    c) Personnel
    d) Financial responsibility

Page intentionally left blank for printing purposes

PROPOSAL/INSTRUCTIONS TO BIDDERS

PROJECT DESCRIPTION: Passenger Boarding Bridge – Gate 3

LOCATION: Erie International Airport
Erie, Pennsylvania

SPONSOR: Erie International Airport

AIP No.
TBD

Bids are due **10:30 AM**, local time on **Thursday, March 18, 2021** at **Erie International Airport, Waiting Room, 4411 West 12th Street, Erie, PA 16505. Bids cannot be submitted electronically.** The bidders shall submit the fully completed Proposal/Instructions to Bidders form, along with the Schedule of Items and proposal guaranty.

Bidders shall submit with their bid, evidence of qualifications meeting the requirements AIA Document A201™ – 2017 and General Provisions 20-02.

Prime Contractor shall be required to self-perform a minimum of 25% of the total contract cost.

All Unit Price or LUMP (sum) entries made on the Schedule of Items pages by the Bidder in the "Unit Price" column and the "Bid Amount" column must be legible, prepared in ink.

Where a LUMP (sum) is called for, it shall be entered only in the "Bid Amount" column.

The unit prices, as stated, will govern in determining the correct total of the bid.

If a Unit Price or LUMP (sum) already entered by the Bidder on the Bid Document is to be altered, it shall be crossed out in ink. The new Unit Price or LUMP (sum) shall be entered above or below it and initialed in ink by the Bidder on the line of the change each time the Unit Price or LUMP (sum) is altered. No other method of alteration will be accepted.

Completed bid documents may be hand delivered to the letting site, on the day of the letting to **Erie International Airport, Waiting Room, Tom Ridge Field, 4411 West 12th Street, Erie, PA 16505-0393.** Bids sent by US mail or an overnight carrier to any other location may not be accepted and may be returned to the bidder unopened. Bids delivered after 10:30am (local time) on the letting day will be returned to the bidder unopened.

NOTE: Any propriety information submitted in response to this Bid Document will become a public record subject to disclosure under the Pennsylvania Right to Know. THE INFORMATION WILL NOT BE TREATED AS CONFIDENTIAL. FINANCIAL INFORMATION WILL BE CONFIDENTIAL.

After review of all bid documents for mathematical errors, the proposal of the apparent low bidder will then be reviewed for discrepancies until a proposal meeting all requirements is found.

The undersigned has examined the plans, specifications and the location of the work described in the proposal for this project and is fully informed as to the nature of the work and the conditions relating to its performance and understands that the quantities shown are approximate only and are subject to either increase or decrease.

The undersigned hereby proposes to furnish all necessary machinery, tools, apparatus and other means of construction, do all the work, furnish all the materials except as otherwise specified and, for each unit price, lump sum to complete the work in strict accordance with the plans therefore and the entire proposal, which is incorporated by reference in these pages, and in strict conformity with the requirements of the General Provisions and such other Special or Supplemental Provisions and Supplemental Specifications as may be a part of this proposal.

The undersigned further proposes to do such extra work as may be authorized by the Sponsor, prices for which are not included in the itemized bid. Compensation shall be made on the basis agreed upon before such extra work is begun.

THE UNDERSIGNED UNDERSTANDS AND AGREES THAT THE SPONSOR RESERVES THE RIGHT TO REJECT ANY AND ALL BIDS AND NO CONTRACTUAL RELATIONSHIP SHALL EXIST BETWEEN THE UNDERSIGNED AND THE SPONSOR FOR THE WORK DESCRIBED HEREIN UNTIL SUCH TIME AS A CONTRACT HAS BEEN FORMALLY EXECUTED BY BOTH THE UNDERSIGNED AND THE SPONSOR.

The undersigned agrees upon submitting this bid that its agents, officers or employees have not directly or indirectly entered into any agreements, participated in any collusion, or otherwise taken any action in restraint of free competitive bidding in connection with this proposal for the above project.

The undersigned encloses shall submit a proposal guaranty in the form of a proposal bond, certified check, cashier’s check or bank money order in the amount of not less than five (5) percent of the bid sum. The proposal guaranty shall be made payable to Erie International Airport, Erie, PA. If the selected contractor fails to provide the required materials and/or execute the contract within fifteen (15) days after being furnished with the necessary contract and bond forms, the proposal guaranty will be forfeited to the Sponsor. The successful bidder will be required to furnish satisfactory 100 percent performance bond as well as labor and material bond.

IT IS FURTHER UNDERSTOOD AND AGREED THAT IF THE SPONSOR, AFTER RECEIVING FROM THE UNDERSIGNED ALL REQUIRED MATERIALS, DETERMINES THAT IT IS NOT IN THE BEST INTEREST OF THE SPONSOR TO EXECUTE AND ENTER INTO SAID CONTRACT, THE PROPOSAL GUARANTY WILL BE PROMPTLY RETURNED.

It is understood that the proposal guaranty of the undersigned will NOT be returned until all steps have complied with the General Provisions. The proposal guarantees of all except the successful bidder will be returned promptly.

The undersigned has examined and carefully studied the following addenda, receipt of which is hereby acknowledged.

Official Use Only
Proposal Received
Date:
Time:
Witnesses:

Proposal Submitted For:	
Prime Contract	**Description**
C-1	General Construction
C-4	Electrical Construction

⋆***NOTE: IF ANY ITEM IDENTIFIED ON THE BID FORM HAS ZERO ($0) DOLLARS OR NOT APPLICABLE (N/A) ASSOCIATED WITH IT; IT IS PRESUMED THAT THE BIDDER IS NOT CHARGING FOR THIS ITEM BUT IS LEGALLY BOUND BY IT ACCORDING TO THE CONTRACT DOCUMENTS.***

C-1: GENERAL CONSTRUCTION BASE BID:

CSI Division	Description	Breakdown	Subtotals	Totals
01	**General:**			
		General Conditions:	$_____	
		Temporary Facilities:	$_____	
		Allowance No. 1	$ 12,000.00	
		Allowance No. 2	$ 10,000.00	
	TOTAL:			$
02	**Selective Demolition**			
		Selective Demolition:	$_____	
	TOTAL:			$
03	**Concrete:**			
		Cast in Place Concrete/Reinforcing:	$_____	
	TOTAL:			$
05	**Metals**			
		Cold Formed Metal Framing and Decking:	$_____	
	TOTAL:			$
06	**Wood, Plastics and Composites**			
		Rough Carpentry and Sheathing	$_____	
	TOTAL			$
07	**Thermal & Moisture Protection:**			
		Thermal Insulation	$_____	
		Fluid Applied Air Barrier	$_____	
		Aluminum Composite Panels	$_____	
		Sheet Metal and Flashing	$_____	
		Joint Sealants:	$_____	
	TOTAL:			$
08	**Doors & Windows:**			
		HM Doors and Frames:	$_____	
		Door Hardware	$_____	
	TOTAL:			$
09	**Finishes:**			
		Gypsum Board:	$_____	

		Resilient Base and Accessories:	$_____	
		Interior and Exterior Painting / Coatings:	$_____	
	TOTAL:			$
10	**Specialties:**			
		Interior Signage:	$_____	
	TOTAL:			$
31	**Earthwork**			
		Site Clearing and Earth Moving	$_____	
		Dewatering	$_____	
		Excavation Support and Protection	$_____	
	TOTAL:			$

All General/Site Construction (C-1) complete as depicted in the Contract Documents inclusive of Allowance No. 1, and Allowance No. 2 for the sum of:

_____Dollars $_____

(WRITTEN)

C-4: ELECTRICAL CONSTRUCTION BASE BID:

CSI Division	Description	Breakdown	Subtotals	Totals
01	**General:**			
		General Conditions:	$_____	
		Temporary Facilities and Controls:	$_____	
		Allowance No. 3	$ 5,000.00	
	TOTAL:			$
02	**Selective Demolition:**		$_____	
	TOTAL:			$
26	**Electrical:**			
		Common Work Results for Electrical:	$_____	
		Low Voltage Electrical Power Conductors and Cables:	$_____	
		Grounding and Bonding for Electrical Systems:	$_____	
		Hangers and Supports for Electrical Systems	$_____	
		Boxes:	$_____	
		Conduit	$_____	
		Surface Raceways	$_____	
		Identification for Electrical Systems	$_____	
		Low Voltage Transformers	$_____	
		Switchboards	$_____	
		Electrical Cabinets and Enclosures:	$_____	
		Wiring Devices:	$_____	
		Enclosed Switches and Circuit Breakers:	$_____	
		Low Voltage AC Surge Protective Devices for Electrical Distribution Systems:	$_____	
	TOTAL:			$
28	**Electrical:**			
		Common Work Results for Electronic Saferty and Security	$_____	
		Conductors and Cables for Electronic Safety and Security Systems	$_____	
		Pathways for Electronic Safety and Security Systems	$_____	
	TOTAL:			$

All Electrical Construction (C-4) complete as depicted in the Contract Documents inclusive of Allowance No. 3 for the sum of:

_____ Dollars $_____

(WRITTEN)

ACKNOWLEDGEMENTS BY BIDDER

a. By submittal of a proposal, the BIDDER acknowledges and accepts that the quantities established by the OWNER are an approximate estimate of the quantities required to fully complete the Project and that the estimated quantities are principally intended to serve as a basis for evaluation of bids. The BIDDER further acknowledges and accepts that payment under this contract will be made only for actual quantities and that quantities will vary in accordance with the General Provisions subsection entitled "Alteration of Work and Quantities".

b. The BIDDER hereby proposes to furnish all necessary machinery, tools, apparatus and other means of construction, do all the work, furnish all the materials except as otherwise specified and, for each unit price and lump sum to complete the work in strict accordance with the plans therefore and the entire proposal, which is incorporated by reference in these pages, and in strict conformity with the requirements of the General Provisions and such other Special or Supplemental Provisions and Supplemental Specifications as may be a part of this proposal. The BIDDER further proposes to do such extra work as may be authorized by the OWNER, prices for which are not included in the itemized bid. Compensation shall be made on the basis agreed upon before such extra work is begun.

c. As evidence of good faith in submitting this proposal, the undersigned encloses a bid guaranty in the form of a proposal bond, certified check, cashier's check or bank money order in the amount of **5.0%** of the bid price. The BIDDER acknowledges and accepts that refusal or failure to accept award and execute a contract within the terms and conditions established herein will result in forfeiture of the bid guaranty to the owner as a liquidated damage.

d. The BIDDER acknowledges and accepts the OWNER'S right to reject any or all bids and to waive any minor informality in any Bid or solicitation procedure should it consider same to be in its best interest.

e. The BIDDER acknowledges and accepts the OWNER'S right to hold all Proposals for purposes of review and evaluation and not issue a notice-of-award for a period not to exceed **Forty Nine (49) Calendar Days** from the stated date for receipt of bids.

f. The undersigned agrees that upon written notice of award of contract, he or she will execute the contract and provide executed payment and performance bonds within **Fifteen (15) Calendar Days** of the notice-of- award. The undersigned accepts that failure to execute the contract and provide the required bonds within the stated timeframe shall result in forfeiture of the bid guaranty to the owner as a liquidated damage.

g. Time of Performance: By submittal of this proposal, the undersigned acknowledges and agrees to commence work within **Ten (10) Calendar Days** of the date specified in the written "Notice-to-Proceed" as issued by the OWNER. The undersigned further agrees to complete the Project within **One Hundred Twenty (120) Calendar Days** from the commencement date specified in the Notice-to-Proceed.

h. The undersigned acknowledges and accepts that liquidated damages in the amount of $500.00 shall be assessed for each calendar day construction exceeds 120 calendar days for the total project, and/or $500 for each calendar day work on a particular phase exceeds the contract time allotted for that phase as a liquidated damage to the OWNER.

i. The BIDDER, by submission of a proposal, acknowledges that award of this contract is subject to the provisions of the Davis-Bacon Wage Act. The BIDDER accepts the requirement to pay prevailing wages for each classification and type of worker as established in the attached wage rate determination as issued by the United States Department of Labor. The BIDDER further acknowledges and accepts their requirement to incorporate the provision to pay the established prevailing wages in every subcontract agreement entered into by the Bidder under this project.

j. Compliance Reports (41 CFR Part 60-1.7): Within 30 days after award of this contract, the Contractor/Subcontractor shall file a compliance report (Standard Form 100) if s/he has not submitted a complete compliance report within 12 months proceeding the date of award. This report is required if the Contractor/Subcontractor meets all of the following conditions:

    1. Contractors/Subcontractors are not exempt based on 41 CFR 60-1,5.

2. Has 50 or more employees.
3. Is a prime contractor or first tier subcontractor.
4. There is a contract, subcontract, or purchase order amounting to $50,000 or more

k. The undersigned acknowledges receipt of the following addenda:

Addendum Number_____dated_____ Received_____

Addendum Number_____dated_____ Received_____

Addendum Number_____dated_____ Received_____

REPRESENTATIONS BY BIDDER

By submittal of a proposal (bid), the BIDDER represents the following:

a. The BIDDER has read and thoroughly examined the bid documents including all authorized addenda.
b. The BIDDER has a complete understanding of the terms and conditions required for the satisfactory performance of project work.
c. The BIDDER has fully informed themselves of the project site, the project site conditions and the surrounding area.
d. The BIDDER has familiarized themselves of the requirements of working on an operating airport and understands the conditions that may in any manner affect cost, progress or performance of the work
e. The BIDDER has correlated their observations with that of the project documents.
f. The BIDDER has found no errors, conflicts, ambiguities or omissions in the project documents, except as previously submitted in writing to the owner that would affect cost, progress or performance of the work.
g. The BIDDER is familiar with all applicable Federal, State and local laws, rules and regulations pertaining to execution of the contract and the project work.
h. The BIDDER has complied with all requirements of these instructions and the associated project documents.
i. The BIDDER certifies they are submitting the bid without collusion.

CERTIFICATIONS BY BIDDER

a. The undersigned hereby declares and certifies that the only parties interested in this proposal are named herein and that this proposal is made without collusion with any other person, firm or corporation. The undersigned further certifies that no member, officer or agent of OWNER'S has direct or indirect financial interest in this proposal.
b. **Required Contract Provisions:** The BIDDER, as a potential federally-assisted construction contractor, certifies that it is responsible for compliance with all Federal, State, and Local contract provision requirements. The BIDDER (including all subcontractors) shall:
    1. insert these contract provisions in each lower tier contract (subcontract or sub-agreement);
    2. incorporate the applicable requirements of these contract provisions by reference for work done under any purchase orders, rental agreements and other agreements for supplies or services;
    3. be responsible for compliance with these contract provisions by any subcontractor, lower-tier subcontractor or service provider.

The following documents are to be attached and made a part of this Bid:

1. Bid Guaranty in the form of proposal bond/cashier's check/certified check – 5%
2. Bid From
3. Acknowledgements by Bidder
4. Signature of Bidder
5. Completed DBE forms "Utilization Statement" and "Letter of Intent"
6. Buy America Certification(s) - "Manufactured Products" and "Total Facility"
7. Tax Delinquency and Felony Convictions
8. Trade Restriction Certification
9. Certification Regarding Lobbying
10. Non-Collison Affidavit
11. Contractor's Certification of Non-Segregated Facilities
12. Commonwealth of Pennsylvania – Public Works Employment Verification Form
13. Evidence of good faith efforts required by 49 CFR Part 26, Appendix A. If proposed DBE goal is met, submittal of evidence of good faith efforts is not required
14. Evidence of BIDDER'S qualifications per the requirements of General Provisions, Section 20-02 Qualification of Bidders. **Provide items a thru d or Penn DOT Prequalification**
    a) Experience
    b) Equipment
    c) Personnel
    d) Financial responsibility

SIGNATURE OF BIDDER

IF AN INDIVIDUAL:

Name: _____

By: _____

(Signature of Individual)

Doing Business as: _____

Business Address: _____

_____

Telephone Number: _____

IF A PARTNERSHIP:

Partnership Name: _____

By: _____

(Authorized Signature)

(Attach Evidence of Authority to sign as a Partnership)

Name and Title: _____

Business Address: _____

_____

Telephone Number: _____

IF A CORPORATION:

Corporation Name: _____

By: _____

(Authorized Signature)

(Attach Evidence of Authority to sign)

Name and Title: _____

Business Address: _____ (CORPORATE SEAL)

_____

Telephone Number: _____

ATTEST:

By: _____

(Authorized Signature)

Name and Title: _____

IF A JOINT VENTURE: *(Attach copy of Joint Venture Agreement)*

Joint Venture Name: _____

By: _____

(Authorized Signature)

(Attach Evidence of Authority to sign)

Name and Title: _____

Business Address: _____

_____

Telephone Number: _____

Joint Venture Name: _____

By: _____

(Authorized Signature)

(Attach Evidence of Authority to sign)

Name and Title: _____

Business Address: _____

_____

Telephone Number: _____

Page intentionally left blank for printing purposes

UTILIZATION STATEMENT
Disadvantage Business Enterprise

The undersigned bidder/offeror has satisfied the requirements of the bid specification in the following manner. (*Please mark the appropriate box*)

- ❑ **The bidder/offeror is committed to a minimum of 00 % DBE utilization on this contract.**

- ❑ **The bidder/offeror, while unable to meet the DBE goal of 00 %, hereby commits to a minimum of _____% DBE utilization on this contract and also submits documentation, as an attachment, demonstrating good faith efforts (GFE).**

The undersigned hereby further assures that the information included herein is true and correct, and that the DBE firm(s) listed herein have agreed to perform a commercially useful function in the work items noted for each firm. The undersigned further understands that no changes to this statement may be made without prior approval from the Civil Right Staff of the Federal Aviation Administration.

_____
Bidder's/Offeror's Firm Name

_____ _____
Signature Date

DBE UTILIZATION SUMMARY

	Contract Amount/Fee		DBE Amount	Contract Percentage
DBE Prime Contractor	$	x 1.00 =	$	%
DBE Subcontractor	$	x 1.00 =	$	%
DBE Manufacturer	$	x 1.00 =	$	%
DBE Regular Dealer	$	x 0.60 =	$	%
DBE Trucking	$	x 1.00 =	$	%
DBE Supply Broker (Fee)	$	x 1.00 =	$	%
DBE Truck Broker (Fee)	$	x 1.00 =	$	%
Total Amount DBE			$	%
DBE Goal			$	%

Note: If the total proposed DBE participation is less than the established DBE goal, Bidder must provide written documentation of the good faith efforts as required by 49 CFR Part 26.

Page intentionally left blank for printing purposes

LETTER OF INTENT
Disadvantaged Business Enterprise
(This page shall be submitted for each DBE firm)

Bidder: Name: _____

If DBE Firm is contracted through Subcontractor, fill out Subcontractor Information below

Subcontractor: *Name:* _____
Address: _____
City: _____ *State:* _____ *Zip:* _____

To be filled out by DBE Firm

DBE Firm: Name: _____
Address: _____
City: _____ State: _____ Zip: _____

DBE Contact: Name: _____ Phone: _____

DBE Certification Agency: _____ **Expiration Date:** _____
DBE Firm shall submit evidence (such as photocopy) of their certification status

Work Item(s) to be performed	Description of Work Item	Quantity	Total Amount ($)

The above-named DBE firm affirms that it will perform the portion of the contract for the estimated dollar value(s) as stated above.

DBE Firm Signature: _____ **Date:** _____

Anticipated DBE Firm Contract Amount ($)		**DBE Participation Rate** (60% - Regular Dealers) (100% - All Others)		**Anticipated DBE Firm Participation ($)**
_____	x	_____	=	_____

The bidder/offeror is committed to utilizing the above-name DBE for the work and estimated amount as shown above. In the event the bidder does not receive award of the prime contract, any and all representations in this Letter of Intent shall be null and void.

Bidder Signature: _____ **Date:** _____

Subcontractor Signature: _____ ***Date:*** _____
(if applicable)

Page intentionally left blank for printing purposes

BUY AMERICAN PREFERENCE

The Contractor agrees to comply with 49 USC § 50101, which provides that Federal funds may not be obligated unless all steel and manufactured goods used in AIP funded projects are produced in the United States, unless the Federal Aviation Administration has issued a waiver for the product; the product is listed as an Excepted Article, Material Or Supply in Federal Acquisition Regulation subpart 25.108; or is included in the FAA Nationwide Buy American Waivers Issued list.

A bidder or offeror must complete and submit the Buy America certification included herein with their bid or offer. The Owner will reject as nonresponsive any bid or offer that does not include a completed Certificate of Buy American Compliance.

Certificate of Buy American Compliance for Total Facility

As a matter of bid responsiveness, the bidder or offeror must complete, sign, date, and submit this certification statement with its proposal. The bidder or offeror must indicate how it intends to comply with 49 USC § 50101 by selecting one of the following certification statements. These statements are mutually exclusive. Bidder must select one or the other (i.e. not both) by inserting a checkmark (□) or the letter "X".

□ Bidder or offeror hereby certifies that it will comply with 49 USC § 50101 by:

a) Only installing steel and manufactured products produced in the United States; or
b) Installing manufactured products for which the Federal Aviation Administration (FAA) has issued a waiver as indicated by inclusion on the current FAA Nationwide Buy American Waivers Issued listing; or
c) Installing products listed as an Excepted Article, Material or Supply in Federal Acquisition Regulation Subpart 25.108.

By selecting this certification statement, the bidder or offeror agrees:

- To provide to the Owner evidence that documents the source and origin of the steel and manufactured product.
- To faithfully comply with providing U.S. domestic products.
- To refrain from seeking a waiver request after establishment of the contract, unless extenuating circumstances emerge that the FAA determines justified.

□ The bidder or offeror hereby certifies it cannot comply with the 100 percent Buy American Preferences of 49 USC § 50101(a) but may qualify for either a Type 3 or Type 4 waiver under 49 USC § 50101(b). By selecting this certification statement, the apparent bidder or offeror with the apparent low bid agrees:

a) To the submit to the Owner within 15 calendar days of the bid opening, a formal waiver request and required documentation that supports the type of waiver being requested.
b) That failure to submit the required documentation within the specified timeframe is cause for a non-responsive determination that may result in rejection of the proposal.
c) To faithfully comply with providing U.S. domestic products at or above the approved U.S. domestic content percentage as approved by the FAA.
d) To furnish U.S. domestic product for any waiver request that the FAA rejects.
e) To refrain from seeking a waiver request after establishment of the contract, unless extenuating circumstances emerge that the FAA determines justified.

Required Documentation

Type 3 Waiver – The cost of components and subcomponents produced in the United States is more than 60 percent of the cost of all components and subcomponents of the "facility". The required documentation for a Type 3 waiver is:

a) Listing of all manufactured products that are not comprised of 100 percent U.S. domestic content (excludes products listed on the FAA Nationwide Buy American Waivers Issued listing and products excluded by Federal Acquisition Regulation Subpart 25.108; products of unknown origin must be considered as non-domestic products in their entirety).
b) Cost of non-domestic components and subcomponents, excluding labor costs associated with final assembly and installation at project location.
c) Percentage of non-domestic component and subcomponent cost as compared to total "facility" component and subcomponent costs, excluding labor costs associated with final assembly and installation at project location.

Type 4 Waiver – Total cost of project using U.S. domestic source product exceeds the total project cost using non-domestic product by 25 percent. The required documentation for a Type 4 of waiver is:

a) Detailed cost information for total project using U.S. domestic product
b) Detailed cost information for total project using non-domestic product

False Statements: Per 49 USC § 47126, this certification concerns a matter within the jurisdiction of the Federal Aviation Administration and the making of a false, fictitious or fraudulent certification may render the maker subject to prosecution under Title 18, United States Code.

Date	Signature
Company Name	Title

CERTIFICATION OF BIDDER REGARDING TAX DELINQUENCY AND FELONY CONVICTIONS:

The BIDDER must complete the following two certification statements. The BIDDER must indicate its current status as it relates to tax delinquency and felony conviction by inserting a checkmark (✓) or the letter "X" in the space following the applicable response. The BIDDER agrees that, if awarded a contract resulting from this solicitation, it will incorporate this provision for certification in all lower tier subcontracts.

1) The BIDDER represents that it is ☐ is not ☐ a corporation that has any unpaid Federal tax liability that has been assessed, for which all judicial and administrative remedies have been exhausted or have lapsed, and that is not being paid in a timely manner pursuant to an agreement with the authority responsible for collecting tax liability.

2) The BIDDER represents that it is ☐ is not ☐ a corporation that was convicted of a criminal violation under any Federal law within the preceding 24 months.

Note: If a BIDDER responds in the affirmative to either of the above representations, the BIDDER is ineligible to receive an award unless the SPONSOR has received notification from the agency suspension and debarment official (SDO) that the SDO has considered suspension or debarment and determined that further action is not required to protect the Government's interests. The BIDDER therefore must provide information to the SPONSOR about its tax liability or conviction to the SPONSOR, who will then notify the FAA Airports District Office, which will then notify the agency's SDO to facilitate completion of the required considerations before award decisions are made.

Term Definitions

Felony conviction: Felony conviction means a conviction within the preceding twenty-four (24) months of a felony criminal violation under any Federal law and includes conviction of an offense defined in a section of the U.S. code that specifically classifies the offense as a felony and conviction of an offense that is classified as a felony under 18 U.S.C. § 3559.

Tax Delinquency: A tax delinquency is any unpaid Federal tax liability that has been assessed, for which all judicial and administrative remedies have been exhausted, or have lapsed, and that is not being paid in a timely manner pursuant to an agreement with the authority responsible for collecting the tax liability.

_____ _____

Date Signature

_____ _____

Company Name Title

Page intentionally left blank for printing purposes

TRADE RESTRICTION CERTIFICATION

The BIDDER must complete the following certification statements. The BIDDER agrees that, if awarded a contract resulting from this solicitation, it will incorporate this provision for certification in all lower tier subcontracts. By submission of an offer, the Offeror certifies that with respect to this solicitation and any resultant contract, the Offeror –

1) is not owned or controlled by one or more citizens of a foreign country included in the list of countries that discriminate against U.S. firms as published by the Office of the United States Trade Representative (USTR);
2) has not knowingly entered into any contract or subcontract for this project with a person that is a citizen or national of a foreign country included on the list of countries that discriminate against U.S. firms as published by the USTR; and
3) has not entered into any subcontract for any product to be used on the Federal project that is produced in a foreign country included on the list of countries that discriminate against U.S. firms published by the USTR.

This certification concerns a matter within the jurisdiction of an agency of the United States of America and the making of a false, fictitious, or fraudulent certification may render the maker subject to prosecution under Title 18 USC Section 1001.

The Offeror/Contractor must provide immediate written notice to the Owner if the Offeror/Contractor learns that its certification or that of a subcontractor was erroneous when submitted or has become erroneous by reason of changed circumstances. The Contractor must require subcontractors provide immediate written notice to the Contractor if at any time it learns that its certification was erroneous by reason of changed circumstances.

Unless the restrictions of this clause are waived by the Secretary of Transportation in accordance with 49 CFR 30.17, **no contract shall be awarded to an Offeror or subcontractor:**

1) who is owned or controlled by one or more citizens or nationals of a foreign country included on the list of countries that discriminate against U.S. firms published by the USTR or
2) whose subcontractors are owned or controlled by one or more citizens or nationals of a foreign country on such USTR list or
3) who incorporates in the public works project any product of a foreign country on such USTR list.

Nothing contained in the foregoing shall be construed to require establishment of a system of records in order to render, in good faith, the certification required by this provision. The knowledge and information of a contractor is not required to exceed that which is normally possessed by a prudent person in the ordinary course of business dealings.

The Offeror agrees that, if awarded a contract resulting from this solicitation, it will incorporate this provision for certification without modification in all lower tier subcontracts. The Contractor may rely on the certification of a prospective subcontractor that it is not a firm from a foreign country included on the list of countries that discriminate against U.S. firms as published by USTR, unless the Offeror has knowledge that the certification is erroneous.

This certification is a material representation of fact upon which reliance was placed when making an award. If it is later determined that the Contractor or subcontractor knowingly rendered an erroneous certification, the Federal Aviation Administration (FAA) may direct through the Owner cancellation of the contract or subcontract for default at no cost to the Owner or the FAA.

Date	Signature
Company Name	Title

CERTIFICATION REGARDING LOBBYING

The Bidder or Offeror certifies by signing and submitting this bid or proposal, to the best of his or her knowledge and belief, that:

(1) No Federal appropriated funds have been paid or will be paid, by or on behalf of the Bidder or Offeror, to any person for influencing or attempting to influence an officer or employee of an agency, a Member of Congress, an officer or employee of Congress, or an employee of a Member of Congress in connection with the awarding of any Federal contract, the making of any Federal grant, the making of any Federal loan, the entering into of any cooperative agreement, and the extension, continuation, renewal, amendment, or modification of any Federal contract, grant, loan, or cooperative agreement.

(2) If any funds other than Federal appropriated funds have been paid or will be paid to any person for influencing or attempting to influence an officer or employee of any agency, a Member of Congress, an officer or employee of Congress, or an employee of a Member of Congress in connection with this Federal contract, grant, loan, or cooperative agreement, the undersigned shall complete and submit Standard Form-LLL, “Disclosure Form to Report Lobbying,” in accordance with its instructions.

(3) The undersigned shall require that **the language of this certification be included in the award documents for all sub-awards at all tiers (including subcontracts, subgrants, and contracts under grants, loans, and cooperative agreements)** and that all sub-recipients shall certify and disclose accordingly.

This certification is a material representation of fact upon which reliance was placed when this transaction was made or entered into. Submission of this certification is a prerequisite for making or entering into this transaction imposed by section 1352, title 31, U.S. Code. Any person who fails to file the required certification shall be subject to a civil penalty of not less than $10,000 and not more than $100,000 for each such failure

_____ _____

Date Signature

_____ _____

Company Name Title

Page intentionally left blank for printing purposes

INSTRUCTIONS FOR NON-COLLUSION AFFIDAVIT

1. This Non-Collusion Affidavit is material to any Contract awarded pursuant to this bid.

2. This Non-Collusion Affidavit must be executed by the member, officer or employee of the bidder who makes the final decision on prices and the amount quoted in the bid.

3. Bid rigging and other efforts to restrain competition, and making of false sworn statements in connection with the submission of bids are unlawful and may be subject to criminal prosecution. The person who signs the Affidavit should examine it carefully before signing and assure himself or herself that each statement is true and accurate, making diligent inquiry, as necessary, of all other persons employed by or associated with the bidder with responsibilities for the preparation, approval or submission of the bid.

4. In the case of a bid submitted by a joint venture, each party to the joint venture must be identified in the Bid Documents, and an Affidavit must be submitted separately on behalf of each party.

5. The term "complementary bid" as used in the Affidavit has the meaning commonly associated with that term in the bidding process, and includes the knowing submission of bids higher than the bid of another firm, any intentionally high or noncompetitive bid, and any other form of bid submitted for the purpose of giving a false appearance of competition.

6. Failure to file an Affidavit in compliance with these instructions shall result in disqualification of the bid.

NON-COLLUSION AFFIDAVIT

Contract/Bid No._____

State of

ss:

County of _____

I state that I am _____ (Title) of _____ (Name of Firm) and that I am authorized to make this Affidavit on behalf of my firm, and its owners, directors, and officers. I am the person responsible in my firm for the price(s) and the amount of the bid.

I state that:

(1) The price(s) and amount of this bid have been arrived at independently and without consultation, communication or agreement with any other contractor, bidder or potential bidder.

(2) Neither the price(s) nor the amount of this bid, and neither the approximate price(s) nor approximate amount of this bid, have been disclosed to any other firm or person who is a bidder or potential bidder, and they will not be disclosed before bid opening.

(3) No attempt has been made or will be made to induce any firm or person to refrain from bidding on this Contract, or to submit a bid higher than this bid, or to submit any intentionally high or noncompetitive bid or other form of complementary bid.

(4) The bid of my firm is made in good faith and not pursuant to any agreement or discussion with, or inducement from, any firm or person to submit a complementary or other noncompetitive bid.

(5) _____ (Name of my firm), its affiliates, subsidiaries, officers, directors and employees are not currently under investigation by any governmental agency and have not in the last four years been convicted or found liable for any act prohibited by State or Federal law in any jurisdiction, involving conspiracy or collusion with respect to bidding on any public contract, except as follows:

I state that _____(Name of Firm) understands and acknowledges that the above representations are material and important, and will be relied on by the Owner in awarding the Contract for which this bid is submitted. I understand and my firm understands that any misstatement in this Affidavit is and shall be treated as fraudulent concealment from the Owner of the true facts relating to the submission of bids for this Contract.

_____

(Name and Company Position)

SWORN to and subscribed before me

this day of _____ A.D. 2020.

My Commission Expires: _____

(NOTARIAL SEAL)

Page intentionally left blank for printing purposes

CONTRACTOR'S CERTIFICATION OF NON-SEGREGATED FACILITIES

The Federally Assisted Construction Contractor certifies that it does not maintain or provide, for its employees, any segregated facilities at any of its establishments and that it does not permit employees to perform services at any location, under its control, where segregated facilities are maintained. The Federally Assisted Construction Contractor certifies that it shall not maintain or provide, for its employees, segregated facilities at any of its establishments and that it shall not permit its employees to perform services at any location, under its control, where segregated facilities are maintained. The Federally Assisted Construction Contractor agrees that a breach of this certification is a violation of the equal opportunity clause in this Contract. As used in this certification, the term "segregated facilities" means any waiting room, work area, restrooms and washrooms, restaurants and other eating areas, timeclocks, locker rooms and other storage or dressing areas, parking lots, drinking fountains, recreation or entertainment areas, transportation and housing facilities provided for employees which are segregated by explicit directives or are in fact segregated on the basis of race, color religion, or national origin because of habit, local custom, or any other reason. The Federally Assisted Construction Contractor agrees that (except where he has obtained identical certifications from proposed Subcontractors for specific time periods) he shall obtain identical certifications from proposed Subcontractors prior to the award of

Subcontracts exceeding $10,000.00 which are not exempt from the provisions of the equal opportunity clause and that he shall retain such certifications in his files.

The information above is true and complete to the best of my knowledge.

Name and Title (Please Type)

Date _____

Signature _____

NOTE: The penalty for making false statements in offers is prescribed in 18 U.S.C. 1001.

Page intentionally left blank for printing purposes

COMMONWEALTH OF PENNSYLVANIA

PUBLIC WORKS EMPLOYMENT VERIFICATION FORM

Business or Organization Name (Employer) _____

Address _____

City _____ State _____ Zip Code _____

Check One:

- ☐ Contractor
- ☐ Subcontractor

Contracting Public Body _____

Contract/Project No _____

Project Description _____

Project Location _____

Date Enrolled in E-Verify: _____

As a contractor/subcontractor for the above referenced public works contract, I hereby affirm that as of the above date, our company is in compliance with the Public Works Employment Verification Act ('the Act') through utilization of the federal E-Verify Program (EVP) operated by the United States Department of Homeland Security. To the best of my/our knowledge, all employees hired post January 1, 2013 are authorized to work in the United States.

It is also agreed to that all public works contractors/subcontractors will utilize the federal EVP to verify the employment eligibility of each new hire within five (5) business days of the employee start date throughout the duration of the public works contract. Documentation confirming the use of the federal EVP upon each new hire shall be maintained in the event of an investigation or audit.

I, _____, authorized representative of the company above, attest that the information contained in this verification form is true and correct and understand that the submission of false or misleading information in connection with the above verification shall be subject to sanctions provided by law.

_____ _____

Authorized Representative Signature Date of Signature

Page intentionally left blank for printing purposes

NOTICE TO BIDDERS
BID PROTEST / DISPUTE PROCEDURES

The following criteria shall be met in order to dispute the bid for this project:

- The protest shall include the name, street address, electronic mail address, and telephone number of the protester. All protested/disputed item(s) shall be detailed in writing and include justification or grounds for protest.
- Pre-Bid Protest: If a protester formally disputes the procurement because the bid solicitation is allegedly defective, the protest shall be submitted in writing to both the Sponsor and Engineer no later than 7 calendar days prior to the bid due date and time. Late submittal of a protest regarding improper bid solicitations may result in rejection of the protest without action by the Sponsor, per FAA policy.
- Pre-Award Protest: If a protester formally disputes award of the project because of alleged improper bid evaluation, the protest shall be submitted in writing to both the Sponsor and Engineer no later than 14 calendar days following the issuance of the Recommendation to Award.
- Post-Award Protest: No protest received after an award has been made will be considered.
- Protests shall be submitted in writing to each of the following locations.

Sponsor:	Project Manager:
Ms. Kimberlie Scharrer	Richard Lundeen, AIA
Erie International Airport	Mead & Hunt, Inc.
4411 West 12th Street	2440 Deming Way
Erie, PA 16505-0393	Middleton, MI 53562
kscharrer@erieairport.org	richard.lundeen@meadhunt.com

All protests must be conspicuously marked and identified that the correspondence contains a bid protest. Protests delivered by e-mail shall not be considered received or official unless the Sponsor and Engineer respond to the e-mail acknowledging receipt of the protest. Hard copies meeting the deadlines and all requirements should therefore also be submitted. Without this acknowledgement the protester must conclude that the protest has not been received.

The Sponsor will respond in detail to each substantive issue raised by a protest submitted in strict accordance with these written requirements. Items addressed by addenda subsequent to a bid protest that address the protested item(s) will not be allowed to be considered for dispute. A protest or specific protest allegations may be dismissed any time sufficient information is obtained by the Sponsor warranting dismissal. The Sponsor's determination is final. Any information contained within a protest will become public record subject to disclosure under the Freedom of Information Act. The information will not be treated as confidential.

Protests must be received by the established deadlines with no exceptions.

Deadline for receipt of bid protests: 10:30 am (EDT), Thursday, March 11, 2021
Deadline for receipt of award protests: 5:00 pm (EDT), Tuesday, April 6, 2021 (anticipated)

This Page Intentionally Left Blank

Part 1 – General Contract Provisions

Section 10 Definition of Terms

When the following terms are used in these specifications, in the contract, or in any documents or other instruments pertaining to construction where these specifications govern, the intent and meaning shall be defined as follows:

Paragraph Number	Term	Definition
10-01	**AASHTO**	The American Association of State Highway and Transportation Officials.
10-02	**Access Road**	The right-of-way, the roadway and all improvements constructed thereon connecting the airport to a public roadway.
10-03	**Advertisement**	A public announcement, as required by local law, inviting bids for work to be performed and materials to be furnished.
10-04	**Airport**	Airport means an area of land or water which is used or intended to be used for the landing and takeoff of aircraft; an appurtenant area used or intended to be used for airport buildings or other airport facilities or rights of way; airport buildings and facilities located in any of these areas, and a heliport.
10-05	**Airport Improvement Program (AIP)**	A grant-in-aid program, administered by the Federal Aviation Administration (FAA).
10-06	**Air Operations Area (AOA)**	The term air operations area (AOA) shall mean any area of the airport used or intended to be used for the landing, takeoff, or surface maneuvering of aircraft. An air operation area shall include such paved or unpaved areas that are used or intended to be used for the unobstructed movement of aircraft in addition to its associated runway, taxiway, or apron.
10-07	**Apron**	Area where aircraft are parked, unloaded or loaded, fueled and/or serviced.
10-08	**ASTM International (ASTM)**	Formerly known as the American Society for Testing and Materials (ASTM).
10-09	**Award**	The Owner's notice to the successful bidder of the acceptance of the submitted bid.

Paragraph Number	Term	Definition
10-10	**Bidder**	Any individual, partnership, firm, or corporation, acting directly or through a duly authorized representative, who submits a proposal for the work contemplated.
10-11	**Building Area**	An area on the airport to be used, considered, or intended to be used for airport buildings or other airport facilities or rights-of-way together with all airport buildings and facilities located thereon.
10-12	**Calendar Day**	Every day shown on the calendar.
10-13	**Certificate of Analysis (COA)**	The COA is the manufacturer's Certificate of Compliance (COC) including all applicable test results required by the specifications.
10-14	**Certificate of Compliance (COC)**	The manufacturer's certification stating that materials or assemblies furnished fully comply with the requirements of the contract. The certificate shall be signed by the manufacturer's authorized representative.
10-15	**Change Order**	A written order to the Contractor covering changes in the plans, specifications, or proposal quantities and establishing the basis of payment and contract time adjustment, if any, for work within the scope of the contract and necessary to complete the project.
10-16	**Contract**	A written agreement between the Owner and the Contractor that establishes the obligations of the parties including but not limited to performance of work, furnishing of labor, equipment and materials and the basis of payment. The awarded contract includes but may not be limited to: Advertisement, Contract form, Proposal, Performance bond, payment bond, General provisions, certifications and representations, Technical Specifications, Plans, Supplemental Provisions, standards incorporated by reference and issued addenda.
10-17	**Contract Item (Pay Item)**	A specific unit of work for which a price is provided in the contract.
10-18	**Contract Time**	The number of calendar days or working days, stated in the proposal, allowed for completion of the contract, including authorized time extensions. If a calendar date of completion is stated in the proposal, in lieu of a number of

Paragraph Number	Term	Definition
		calendar or working days, the contract shall be completed by that date.
10-19	**Contractor**	The individual, partnership, firm, or corporation primarily liable for the acceptable performance of the work contracted and for the payment of all legal debts pertaining to the work who acts directly or through lawful agents or employees to complete the contract work.
10-20	**Contractors Quality Control (QC) Facilities**	The Contractor's QC facilities in accordance with the Contractor Quality Control Program (CQCP).
10-21	**Contractor Quality Control Program (CQCP)**	Details the methods and procedures that will be taken to assure that all materials and completed construction required by the contract conform to contract plans, technical specifications and other requirements, whether manufactured by the Contractor, or procured from subcontractors or vendors.
10-22	**Control Strip**	A demonstration by the Contractor that the materials, equipment, and construction processes results in a product meeting the requirements of the specification.
10-23	**Construction Safety and Phasing Plan (CSPP)**	The overall plan for safety and phasing of a construction project developed by the airport operator, or developed by the airport operator's consultant and approved by the airport operator. It is included in the invitation for bids and becomes part of the project specifications.
10-24	**Drainage System**	The system of pipes, ditches, and structures by which surface or subsurface waters are collected and conducted from the airport area.
10-25	**Engineer**	The individual, partnership, firm, or corporation duly authorized by the Owner to be responsible for engineering, inspection, and/or observation of the contract work and acting directly or through an authorized representative.
10-26	**Equipment**	All machinery, together with the necessary supplies for upkeep and maintenance; and all tools and apparatus necessary for the proper construction and acceptable completion of the work.
10-27	**Extra Work**	An item of work not provided for in the awarded contract as previously modified by change order or supplemental agreement, but which is found by the Owner's Engineer or Resident Project Representative (RPR) to be necessary to

Paragraph Number	Term	Definition
		complete the work within the intended scope of the contract as previously modified.
10-28	**FAA**	The Federal Aviation Administration. When used to designate a person, FAA shall mean the Administrator or their duly authorized representative.
10-29	**Federal Specifications**	The federal specifications and standards, commercial item descriptions, and supplements, amendments, and indices prepared and issued by the General Services Administration.
10-30	**Force Account**	**a.** Contract Force Account - A method of payment that addresses extra work performed by the Contractor on a time and material basis. **b.** Owner Force Account - Work performed for the project by the Owner's employees.
10-31	**Intention of Terms**	Whenever, in these specifications or on the plans, the words “directed,” “required,” “permitted,” “ordered,” “designated,” “prescribed,” or words of like import are used, it shall be understood that the direction, requirement, permission, order, designation, or prescription of the Engineer and/or Resident Project Representative (RPR) is intended; and similarly, the words “approved,” “acceptable,” “satisfactory,” or words of like import, shall mean approved by, or acceptable to, or satisfactory to the Engineer and/or RPR, subject in each case to the final determination of the Owner. Any reference to a specific requirement of a numbered paragraph of the contract specifications or a cited standard shall be interpreted to include all general requirements of the entire section, specification item, or cited standard that may be pertinent to such specific reference.
10-32	**Lighting**	A system of fixtures providing or controlling the light sources used on or near the airport or within the airport buildings. The field lighting includes all luminous signals, markers, floodlights, and illuminating devices used on or near the airport or to aid in the operation of aircraft landing at, taking off from, or taxiing on the airport surface.
10-33	**Major and Minor Contract Items**	A major contract item shall be any item that is listed in the proposal, the total cost of which is equal to or greater than 20% of the total amount of the award contract. All other items shall be considered minor contract items.

Paragraph Number	Term	Definition
10-34	**Materials**	Any substance specified for use in the construction of the contract work.
10-35	**Modification of Standards (MOS)**	Any deviation from standard specifications applicable to material and construction methods in accordance with FAA Order 5300.1.
10-36	**Notice to Proceed (NTP)**	A written notice to the Contractor to begin the actual contract work on a previously agreed to date. If applicable, the Notice to Proceed shall state the date on which the contract time begins.
10-37	**Owner**	The term "Owner" shall mean the party of the first part or the contracting agency signatory to the contract. Where the term "Owner" is capitalized in this document, it shall mean airport Sponsor only. The Owner for this project is **Erie Regional Airport Authority**
10-38	Passenger Facility Charge (PFC)	Per 14 Code of Federal Regulations (CFR) Part 158 and 49 United States Code (USC) § 40117, a PFC is a charge imposed by a public agency on passengers enplaned at a commercial service airport it controls.
10-39	**Pavement Structure**	The combined surface course, base course(s), and subbase course(s), if any, considered as a single unit.
10-40	**Payment bond**	The approved form of security furnished by the Contractor and their own surety as a guaranty that the Contractor will pay in full all bills and accounts for materials and labor used in the construction of the work.
10-41	**Performance bond**	The approved form of security furnished by the Contractor and their own surety as a guaranty that the Contractor will complete the work in accordance with the terms of the contract.
10-42	**Plans**	The official drawings or exact reproductions which show the location, character, dimensions and details of the airport and the work to be done and which are to be considered as a part of the contract, supplementary to the specifications. Plans may also be referred to as 'contract drawings.'
10-43	**Project**	The agreed scope of work for accomplishing specific airport development with respect to a particular airport.

Paragraph Number	Term	Definition
10-44	**Proposal**	The written offer of the bidder (when submitted on the approved proposal form) to perform the contemplated work and furnish the necessary materials in accordance with the provisions of the plans and specifications.
10-45	**Proposal guaranty**	The security furnished with a proposal to guarantee that the bidder will enter into a contract if their own proposal is accepted by the Owner.
10-46	**Quality Assurance (QA)**	Owner's responsibility to assure that construction work completed complies with specifications for payment.
10-47	**Quality Control (QC)**	Contractor's responsibility to control material(s) and construction processes to complete construction in accordance with project specifications.
10-48	**Quality Assurance (QA) Inspector**	An authorized representative of the Engineer and/or Resident Project Representative (RPR) assigned to make all necessary inspections, observations, tests, and/or observation of tests of the work performed or being performed, or of the materials furnished or being furnished by the Contractor.
10-49	**Quality Assurance (QA) Laboratory**	The official quality assurance testing laboratories of the Owner or such other laboratories as may be designated by the Engineer or RPR. May also be referred to as Engineer's, Owner's, or QA Laboratory.
10-50	**Resident Project Representative (RPR)**	The individual, partnership, firm, or corporation duly authorized by the Owner to be responsible for all necessary inspections, observations, tests, and/or observations of tests of the contract work performed or being performed, or of the materials furnished or being furnished by the Contractor, and acting directly or through an authorized representative.
10-51	**Runway**	The area on the airport prepared for the landing and takeoff of aircraft.
10-52	**Runway Safety Area (RSA)**	A defined surface surrounding the runway prepared or suitable for reducing the risk of damage to aircraft. See the construction safety and phasing plan (CSPP) for limits of the RSA.
10-53	**Safety Plan Compliance Document (SPCD)**	Details how the Contractor will comply with the CSPP.

Paragraph Number	Term	Definition
10-54	**Specifications**	A part of the contract containing the written directions and requirements for completing the contract work. Standards for specifying materials or testing which are cited in the contract specifications by reference shall have the same force and effect as if included in the contract physically.
10-55	**Sponsor**	A Sponsor is defined in 49 USC § 47102(24) as a public agency that submits to the FAA for an AIP grant; or a private Owner of a public-use airport that submits to the FAA an application for an AIP grant for the airport.
10-56	**Structures**	Airport facilities such as bridges; culverts; catch basins, inlets, retaining walls, cribbing; storm and sanitary sewer lines; water lines; underdrains; electrical ducts, manholes, handholes, lighting fixtures and bases; transformers; navigational aids; buildings; vaults; and, other manmade features of the airport that may be encountered in the work and not otherwise classified herein.
10-57	**Subgrade**	The soil that forms the pavement foundation.
10-58	**Superintendent**	The Contractor's executive representative who is present on the work during progress, authorized to receive and fulfill instructions from the RPR, and who shall supervise and direct the construction.
10-59	**Supplemental Agreement**	A written agreement between the Contractor and the Owner that establishes the basis of payment and contract time adjustment, if any, for the work affected by the supplemental agreement. A supplemental agreement is required if: (1) in scope work would increase or decrease the total amount of the awarded contract by more than 25%: (2) in scope work would increase or decrease the total of any major contract item by more than 25%; (3) work that is not within the scope of the originally awarded contract; or (4) adding or deleting of a major contract item.
10-60	**Surety**	The corporation, partnership, or individual, other than the Contractor, executing payment or performance bonds that are furnished to the Owner by the Contractor.
10-61	**Taxilane**	A taxiway designed for low speed movement of aircraft between aircraft parking areas and terminal areas.
10-62	**Taxiway**	The portion of the air operations area of an airport that has been designated by competent airport authority for

Paragraph Number	Term	Definition
		movement of aircraft to and from the airport's runways, aircraft parking areas, and terminal areas.
10-63	**Taxiway/Taxilane Safety Area (TSA)**	A defined surface alongside the taxiway prepared or suitable for reducing the risk of damage to an aircraft. See the construction safety and phasing plan (CSPP) for limits of the TSA.
10-64	**Work**	The furnishing of all labor, materials, tools, equipment, and incidentals necessary or convenient to the Contractor's performance of all duties and obligations imposed by the contract, plans, and specifications.
10-65	**Working day**	A working day shall be any day other than a legal holiday, Saturday, or Sunday on which the normal working forces of the Contractor may proceed with regular work for at least six (6) hours toward completion of the contract. When work is suspended for causes beyond the Contractor's control, it will not be counted as a working day. Saturdays, Sundays and holidays on which the Contractor's forces engage in regular work will be considered as working days.
10-66	**Owner Defined terms**	None

END OF SECTION 10

Section 20 Proposal Requirements and Conditions

20-01 Advertisement (Notice to Bidders). The "Advertisement for Bids" included in the front of this Specifications 'Book' has been published at such places and at such times as required by local law or ordinances and is made a part of the "Contract Documents."

The Bid Advertisement provides the following information for Bidders:

- time and place for submitting sealed proposals;
- description of the proposed work;
- instructions about obtaining proposal forms, plans, and specifications;
- Contractor's requirements (license, registration, etc);
- required Federal Provisions solicitation language;
- the proposal guaranty required; and
- the Owner's right to reject any and all bids.

20-02 Qualification of bidders. Each bidder shall submit evidence of competency and evidence of financial responsibility to perform the work to the Owner at the time of bid opening.

Evidence of competency, unless otherwise specified, shall consist of statements covering the bidder's past experience on similar work, and a list of equipment and a list of key personnel that would be available for the work.

Each bidder shall furnish the Owner satisfactory evidence of their financial responsibility. Evidence of financial responsibility, unless otherwise specified, shall consist of a confidential statement or report of the bidder's financial resources and liabilities as of the last calendar year or the bidder's last fiscal year. Such statements or reports shall be certified by a public accountant. At the time of submitting such financial statements or reports, the bidder shall further certify whether their financial responsibility is approximately the same as stated or reported by the public accountant. If the bidder's financial responsibility has changed, the bidder shall qualify the public accountant's statement or report to reflect the bidder's true financial condition at the time such qualified statement or report is submitted to the Owner.

Unless otherwise specified, a bidder may submit evidence that they are prequalified with the State Highway Division and are on the current "bidder's list" of the state in which the proposed work is located. Evidence of State Highway Division prequalification may be submitted as evidence of financial responsibility in lieu of the certified statements or reports specified above.

20-03 Contents of proposal forms. The Owner's proposal forms state the location and description of the proposed construction; the place, date, and time of opening of the proposals; and the estimated quantities of the various items of work to be performed and materials to be furnished for which unit bid prices are asked. The proposal form states the time in which the work must be completed, and the amount of the proposal guaranty that must accompany the proposal. The Owner will accept only those Proposals properly executed on physical forms or electronic forms provided by the Owner. Bidder actions that may cause the Owner to deem a proposal irregular are given in paragraph 20-09 *Irregular proposals*.

A prebid conference is required on this project to discuss as a minimum, the following items: material requirements; submittals; Quality Control/Quality Assurance requirements; the construction safety and phasing plan including airport access and staging areas; and unique airfield paving construction requirements. The prebid conference will be held on Tuesday March 2, 2021, 10am (local time) at the airport waiting room.

20-04 Issuance of proposal forms. The Owner reserves the right to refuse to issue a proposal form to a prospective bidder if the bidder is in default for any of the following reasons:

a. Failure to comply with any prequalification regulations of the Owner, if such regulations are cited, or otherwise included, in the proposal as a requirement for bidding.

b. Failure to pay, or satisfactorily settle, all bills due for labor and materials on former contracts in force with the Owner at the time the Owner issues the proposal to a prospective bidder.

c. Documented record of Contractor default under previous contracts with the Owner.

d. Documented record of unsatisfactory work on previous contracts with the Owner.

20-05 Interpretation of estimated proposal quantities. An estimate of quantities of work to be done and materials to be furnished under these specifications is given in the proposal. It is the result of careful calculations and is believed to be correct. It is given only as a basis for comparison of proposals and the award of the contract. The Owner does not expressly, or by implication, agree that the actual quantities involved will correspond exactly therewith; nor shall the bidder plead misunderstanding or deception because of such estimates of quantities, or of the character, location, or other conditions pertaining to the work. Payment to the Contractor will be made only for the actual quantities of work performed or materials furnished in accordance with the plans and specifications. It is understood that the quantities may be increased or decreased as provided in the Section 40, paragraph 40-02, Alteration of Work and Quantities, without in any way invalidating the unit bid prices.

20-06 Examination of plans, specifications, and site. The bidder is expected to carefully examine the site of the proposed work, the proposal, plans, specifications, and contract forms. Bidders shall satisfy themselves to the character, quality, and quantities of work to be performed, materials to be furnished, and to the requirements of the proposed contract. The submission of a proposal shall be prima facie evidence that the bidder has made such examination and is satisfied to the conditions to be encountered in performing the work and the requirements of the proposed contract, plans, and specifications.

20-07 Preparation of proposal. The bidder shall submit their proposal on the forms furnished by the Owner. All blank spaces in the proposal forms, unless explicitly stated otherwise, must be correctly filled in where indicated for each and every item for which a quantity is given. The bidder shall state the price (written in ink or typed) both in words and numerals which they propose for each pay item furnished in the proposal. In case of conflict between words and numerals, the words, unless obviously incorrect, shall govern.

The bidder shall correctly sign the proposal in ink. If the proposal is made by an individual, their name and post office address must be shown. If made by a partnership, the name and post office address of each member of the partnership must be shown. If made by a corporation, the person signing the proposal shall give the name of the state where the corporation was chartered and the name, titles, and business address of the president, secretary, and the treasurer. Anyone signing a proposal as an agent shall file evidence of their authority to do so and that the signature is binding upon the firm or corporation.

20-08 Responsive and responsible bidder. A responsive bid conforms to all significant terms and conditions contained in the Owner's invitation for bid. It is the Owner's responsibility to decide if the exceptions taken by a bidder to the solicitation are material or not and the extent of deviation it is willing to accept.

A responsible bidder has the ability to perform successfully under the terms and conditions of a proposed procurement, as defined in 2 CFR § 200.318(h). This includes such matters as Contractor integrity, compliance with public policy, record of past performance, and financial and technical resources.

20-09 Irregular proposals. Proposals shall be considered irregular for the following reasons:

a. If the proposal is on a form other than that furnished by the Owner, or if the Owner's form is altered, or if any part of the proposal form is detached.

b. If there are unauthorized additions, conditional or alternate pay items, or irregularities of any kind that make the proposal incomplete, indefinite, or otherwise ambiguous.

c. If the proposal does not contain a unit price for each pay item listed in the proposal, except in the case of authorized alternate pay items, for which the bidder is not required to furnish a unit price.

d. If the proposal contains unit prices that are obviously unbalanced.

e. If the proposal is not accompanied by the proposal guaranty specified by the Owner.

f. If the applicable Disadvantaged Business Enterprise information is incomplete.

The Owner reserves the right to reject any irregular proposal and the right to waive technicalities if such waiver is in the best interest of the Owner and conforms to local laws and ordinances pertaining to the letting of construction contracts.

20-10 Bid guarantee. Each separate proposal shall be accompanied by a bid bond, certified check, or other specified acceptable collateral, in the amount specified in the proposal form. Such bond, check, or collateral, shall be made payable to the Owner.

20-11 Delivery of proposal. Each proposal submitted shall be placed in a sealed envelope plainly marked with the project number, location of airport, and name and business address of the bidder on the outside. When sent by mail, preferably registered, the sealed proposal, marked as indicated above, should be enclosed in an additional envelope. No proposal will be considered unless received at the place specified in the advertisement or as modified by Addendum before the time specified for opening all bids. Proposals received after the bid opening time shall be returned to the bidder unopened.

20-12 Withdrawal or revision of proposals. A bidder may withdraw or revise (by withdrawal of one proposal and submission of another) a proposal provided that the bidder's request for withdrawal is received by the Owner in writing or by email before the time specified for opening bids. Revised proposals must be received at the place specified in the advertisement before the time specified for opening all bids.

20-13 Public opening of proposals. Proposals shall be opened, and read, publicly at the time and place specified in the advertisement. Bidders, their authorized agents, and other interested persons are invited to attend. Proposals that have been withdrawn (by written or telegraphic request) or received after the time specified for opening bids shall be returned to the bidder unopened.

20-14 Disqualification of bidders. A bidder shall be considered disqualified for any of the following reasons:

a. Submitting more than one proposal from the same partnership, firm, or corporation under the same or different name.

b. Evidence of collusion among bidders. Bidders participating in such collusion shall be disqualified as bidders for any future work of the Owner until any such participating bidder has been reinstated by the Owner as a qualified bidder.

c. If the bidder is considered to be in "default" for any reason specified in paragraph 20-04, *Issuance of Proposal Forms,* of this section.

20-15 Discrepancies and Omissions. A Bidder who discovers discrepancies or omissions with the project bid documents shall immediately notify the Owner's Engineer of the matter. A bidder that has doubt as to the true meaning of a project requirement may submit to the Owner's Engineer a written request for interpretation no later than **5** days prior to bid opening.

Any interpretation of the project bid documents by the Owner's Engineer will be by written addendum issued by the Owner. The Owner will not consider any instructions, clarifications or interpretations of the bidding documents in any manner other than written addendum.

END OF SECTION 20

Section 30 Award and Execution of Contract

30-01 Consideration of proposals. After the proposals are publicly opened and read, they will be compared on the basis of the summation of the products obtained by multiplying the estimated quantities shown in the proposal by the unit bid prices. If a bidder's proposal contains a discrepancy between unit bid prices written in words and unit bid prices written in numbers, the unit bid price written in words shall govern.

Until the award of a contract is made, the Owner reserves the right to reject a bidder's proposal for any of the following reasons:

a. If the proposal is irregular as specified in Section 20, paragraph 20-09, *Irregular Proposals*.

b. If the bidder is disqualified for any of the reasons specified Section 20, paragraph 20-14, *Disqualification of Bidders*.

In addition, until the award of a contract is made, the Owner reserves the right to reject any or all proposals, waive technicalities, if such waiver is in the best interest of the Owner and is in conformance with applicable state and local laws or regulations pertaining to the letting of construction contracts; advertise for new proposals; or proceed with the work otherwise. All such actions shall promote the Owner's best interests.

30-02 Award of contract. The award of a contract, if it is to be awarded, shall be made within **120** calendar days of the date specified for publicly opening proposals, unless otherwise specified herein.

If the Owner elects to proceed with an award of contract, the Owner will make award to the responsible bidder whose bid, conforming with all the material terms and conditions of the bid documents, is the lowest in price.

30-03 Cancellation of award. The Owner reserves the right to cancel the award without liability to the bidder, except return of proposal guaranty, at any time before a contract has been fully executed by all parties and is approved by the Owner in accordance with paragraph 30-07 *Approval of Contract*.

30-04 Return of proposal guaranty. All proposal guaranties, except those of the two lowest bidders, will be returned immediately after the Owner has made a comparison of bids as specified in the paragraph 30-01, *Consideration of Proposals.* Proposal guaranties of the two lowest bidders will be retained by the Owner until such time as an award is made, at which time, the unsuccessful bidder's proposal guaranty will be returned. The successful bidder's proposal guaranty will be returned as soon as the Owner receives the contract bonds as specified in paragraph 30-05, *Requirements of Contract Bonds.*

30-05 Requirements of contract bonds. At the time of the execution of the contract, the successful bidder shall furnish the Owner a surety bond or bonds that have been fully executed by the bidder and the surety guaranteeing the performance of the work and the payment of all legal debts that may be incurred by reason of the Contractor's performance of the work. The surety and the form of the bond or bonds shall be acceptable to the Owner. Unless otherwise specified in this subsection, the surety bond or bonds shall be in a sum equal to the full amount of the contract.

30-06 Execution of contract. The successful bidder shall sign (execute) the necessary agreements for entering into the contract and return the signed contract to the Owner, along with the fully executed surety bond or bonds specified in paragraph 30-05, *Requirements of Contract Bonds*, of this section, within 15 calendar days from the date mailed or otherwise delivered to the successful bidder.

30-07 Approval of contract. Upon receipt of the contract and contract bond or bonds that have been executed by the successful bidder, the Owner shall complete the execution of the contract in accordance with local laws or ordinances, and return the fully executed contract to the Contractor. Delivery of the

fully executed contract to the Contractor shall constitute the Owner's approval to be bound by the successful bidder's proposal and the terms of the contract.

30-08 Failure to execute contract. Failure of the successful bidder to execute the contract and furnish an acceptable surety bond or bonds within the period specified in paragraph 30-06, *Execution of Contract*, of this section shall be just cause for cancellation of the award and forfeiture of the proposal guaranty, not as a penalty, but as liquidated damages to the Owner.

END OF SECTION 30

Section 40 Scope of Work

40-01 Intent of contract. The intent of the contract is to provide for construction and completion, in every detail, of the work described. It is further intended that the Contractor shall furnish all labor, materials, equipment, tools, transportation, and supplies required to complete the work in accordance with the plans, specifications, and terms of the contract.

40-02 Alteration of work and quantities. The Owner reserves the right to make such changes in quantities and work as may be necessary or desirable to complete, in a satisfactory manner, the original intended work. Unless otherwise specified in the Contract, the Owner's Engineer or RPR shall be and is hereby authorized to make, in writing, such in-scope alterations in the work and variation of quantities as may be necessary to complete the work, provided such action does not represent a significant change in the character of the work.

For purpose of this section, a significant change in character of work means: any change that is outside the current contract scope of work; any change (increase or decrease) in the total contract cost by more than 25%; or any change in the total cost of a major contract item by more than 25%.

Work alterations and quantity variances that do not meet the definition of significant change in character of work shall not invalidate the contract nor release the surety. Contractor agrees to accept payment for such work alterations and quantity variances in accordance with Section 90, paragraph 90-03, *Compensation for Altered Quantities*.

Should the value of altered work or quantity variance meet the criteria for significant change in character of work, such altered work and quantity variance shall be covered by a supplemental agreement. Supplemental agreements shall also require consent of the Contractor's surety and separate performance and payment bonds. If the Owner and the Contractor are unable to agree on a unit adjustment for any contract item that requires a supplemental agreement, the Owner reserves the right to terminate the contract with respect to the item and make other arrangements for its completion.

40-03 Omitted items. The Owner, the Owner's Engineer or the RPR may provide written notice to the Contractor to omit from the work any contract item that does not meet the definition of major contract item. Major contract items may be omitted by a supplemental agreement. Such omission of contract items shall not invalidate any other contract provision or requirement.

Should a contract item be omitted or otherwise ordered to be non-performed, the Contractor shall be paid for all work performed toward completion of such item prior to the date of the order to omit such item. Payment for work performed shall be in accordance with Section 90, paragraph 90-04, *Payment for Omitted Items*.

40-04 Extra work. Should acceptable completion of the contract require the Contractor to perform an item of work not provided for in the awarded contract as previously modified by change order or supplemental agreement, Owner may issue a Change Order to cover the necessary extra work. Change orders for extra work shall contain agreed unit prices for performing the change order work in accordance with the requirements specified in the order, and shall contain any adjustment to the contract time that, in the RPR's opinion, is necessary for completion of the extra work.

When determined by the RPR to be in the Owner's best interest, the RPR may order the Contractor to proceed with extra work as provided in Section 90, paragraph 90-05, *Payment for Extra Work*. Extra work that is necessary for acceptable completion of the project, but is not within the general scope of the work covered by the original contract shall be covered by a supplemental agreement as defined in Section 10, paragraph 10-59, *Supplemental Agreement*.

If extra work is essential to maintaining the project critical path, RPR may order the Contractor to commence the extra work under a Time and Material contract method. Once sufficient detail is available

to establish the level of effort necessary for the extra work, the Owner shall initiate a change order or supplemental agreement to cover the extra work.

Any claim for payment of extra work that is not covered by written agreement (change order or supplemental agreement) shall be rejected by the Owner.

40-05 Maintenance of traffic. It is the explicit intention of the contract that the safety of aircraft, as well as the Contractor's equipment and personnel, is the most important consideration. The Contractor shall maintain traffic in the manner detailed in the Construction Safety and Phasing Plan (CSPP).

a. It is understood and agreed that the Contractor shall provide for the free and unobstructed movement of aircraft in the air operations areas (AOAs) of the airport with respect to their own operations and the operations of all subcontractors as specified in Section 80, paragraph 80-04, *Limitation of Operations*. It is further understood and agreed that the Contractor shall provide for the uninterrupted operation of visual and electronic signals (including power supplies thereto) used in the guidance of aircraft while operating to, from, and upon the airport as specified in Section 70, paragraph 70-15, *Contractor's Responsibility for Utility Service and Facilities of Others*.

b. With respect to their own operations and the operations of all subcontractors, the Contractor shall provide marking, lighting, and other acceptable means of identifying personnel, equipment, vehicles, storage areas, and any work area or condition that may be hazardous to the operation of aircraft, fire-rescue equipment, or maintenance vehicles at the airport in accordance with the construction safety and phasing plan (CSPP) and the safety plan compliance document (SPCD).

c. When the contract requires the maintenance of an existing road, street, or highway during the Contractor's performance of work that is otherwise provided for in the contract, plans, and specifications, the Contractor shall keep the road, street, or highway open to all traffic and shall provide maintenance as may be required to accommodate traffic. The Contractor, at their expense, shall be responsible for the repair to equal or better than preconstruction conditions of any damage caused by the Contractor's equipment and personnel. The Contractor shall furnish, erect, and maintain barricades, warning signs, flag person, and other traffic control devices in reasonable conformity with the Manual on Uniform Traffic Control Devices (MUTCD) (http://mutcd.fhwa.dot.gov/), unless otherwise specified. The Contractor shall also construct and maintain in a safe condition any temporary connections necessary for ingress to and egress from abutting property or intersecting roads, streets or highways.

40-06 Removal of existing structures. All existing structures encountered within the established lines, grades, or grading sections shall be removed by the Contractor, unless such existing structures are otherwise specified to be relocated, adjusted up or down, salvaged, abandoned in place, reused in the work or to remain in place. The cost of removing such existing structures shall not be measured or paid for directly, but shall be included in the various contract items.

Should the Contractor encounter an existing structure (above or below ground) in the work for which the disposition is not indicated on the plans, the Resident Project Representative (RPR) shall be notified prior to disturbing such structure. The disposition of existing structures so encountered shall be immediately determined by the RPR in accordance with the provisions of the contract.

Except as provided in Section 40, paragraph 40-07, *Rights in and Use of Materials Found in the Work*, it is intended that all existing materials or structures that may be encountered (within the lines, grades, or grading sections established for completion of the work) shall be used in the work as otherwise provided for in the contract and shall remain the property of the Owner when so used in the work.

40-07 Rights in and use of materials found in the work. Should the Contractor encounter any material such as (but not restricted to) sand, stone, gravel, slag, or concrete slabs within the established lines, grades, or grading sections, the use of which is intended by the terms of the contract to be embankment, the Contractor may at their own option either:

a. Use such material in another contract item, providing such use is approved by the RPR and is in conformance with the contract specifications applicable to such use; or,

b. Remove such material from the site, upon written approval of the RPR; or

c. Use such material for the Contractor's own temporary construction on site; or,

d. Use such material as intended by the terms of the contract.

Should the Contractor wish to exercise option a., b., or c., the Contractor shall request the RPR's approval in advance of such use.

Should the RPR approve the Contractor's request to exercise option a., b., or c., the Contractor shall be paid for the excavation or removal of such material at the applicable contract price. The Contractor shall replace, at their expense, such removed or excavated material with an agreed equal volume of material that is acceptable for use in constructing embankment, backfills, or otherwise to the extent that such replacement material is needed to complete the contract work. The Contractor shall not be charged for use of such material used in the work or removed from the site.

Should the RPR approve the Contractor's exercise of option a., the Contractor shall be paid, at the applicable contract price, for furnishing and installing such material in accordance with requirements of the contract item in which the material is used.

It is understood and agreed that the Contractor shall make no claim for delays by reason of their own exercise of option a., b., or c.

The Contractor shall not excavate, remove, or otherwise disturb any material, structure, or part of a structure which is located outside the lines, grades, or grading sections established for the work, except where such excavation or removal is provided for in the contract, plans, or specifications.

40-08 Final cleanup. Upon completion of the work and before acceptance and final payment will be made, the Contractor shall remove from the site all machinery, equipment, surplus and discarded materials, rubbish, temporary structures, and stumps or portions of trees. The Contractor shall cut all brush and woods within the limits indicated and shall leave the site in a neat and presentable condition. Material cleared from the site and deposited on adjacent property will not be considered as having been disposed of satisfactorily, unless the Contractor has obtained the written permission of the property Owner.

END OF SECTION 40

Section 50 Control of Work

50-01 Authority of the Resident Project Representative (RPR). The RPR has final authority regarding the interpretation of project specification requirements. The RPR shall determine acceptability of the quality of materials furnished, method of performance of work performed, and the manner and rate of performance of the work. The RPR does not have the authority to accept work that does not conform to specification requirements.

50-02 Conformity with plans and specifications. All work and all materials furnished shall be in reasonably close conformity with the lines, grades, grading sections, cross-sections, dimensions, material requirements, and testing requirements that are specified (including specified tolerances) in the contract, plans, or specifications.

If the RPR finds the materials furnished, work performed, or the finished product not within reasonably close conformity with the plans and specifications, but that the portion of the work affected will, in their opinion, result in a finished product having a level of safety, economy, durability, and workmanship acceptable to the Owner, the RPR will advise the Owner of their determination that the affected work be accepted and remain in place. The RPR will document the determination and recommend to the Owner a basis of acceptance that will provide for an adjustment in the contract price for the affected portion of the work. Changes in the contract price must be covered by contract change order or supplemental agreement as applicable.

If the RPR finds the materials furnished, work performed, or the finished product are not in reasonably close conformity with the plans and specifications and have resulted in an unacceptable finished product, the affected work or materials shall be removed and replaced or otherwise corrected by and at the expense of the Contractor in accordance with the RPR's written orders.

The term "reasonably close conformity" shall not be construed as waiving the Contractor's responsibility to complete the work in accordance with the contract, plans, and specifications. The term shall not be construed as waiving the RPR's responsibility to insist on strict compliance with the requirements of the contract, plans, and specifications during the Contractor's execution of the work, when, in the RPR's opinion, such compliance is essential to provide an acceptable finished portion of the work.

The term "reasonably close conformity" is also intended to provide the RPR with the authority, after consultation with the Sponsor and FAA, to use sound engineering judgment in their determinations to accept work that is not in strict conformity, but will provide a finished product equal to or better than that required by the requirements of the contract, plans and specifications.

The RPR will not be responsible for the Contractor's means, methods, techniques, sequences, or procedures of construction or the safety precautions incident thereto.

50-03 Coordination of contract, plans, and specifications. The contract, plans, specifications, and all referenced standards cited are essential parts of the contract requirements. If electronic files are provided and used on the project and there is a conflict between the electronic files and hard copy plans, the hard copy plans shall govern. A requirement occurring in one is as binding as though occurring in all. They are intended to be complementary and to describe and provide for a complete work. In case of discrepancy, calculated dimensions will govern over scaled dimensions; contract technical specifications shall govern over contract general provisions, plans, cited standards for materials or testing, and cited advisory circulars (ACs); contract general provisions shall govern over plans, cited standards for materials or testing, and cited ACs; plans shall govern over cited standards for materials or testing and cited ACs. If any paragraphs contained in the Special Provisions conflict with General Provisions or Technical Specifications, the Special Provisions shall govern.

From time to time, discrepancies within cited testing standards occur due to the timing of the change, edits, and/or replacement of the standards. If the Contractor discovers any apparent discrepancy within

standard test methods, the Contractor shall immediately ask the RPR for an interpretation and decision, and such decision shall be final.

The Contractor shall not take advantage of any apparent error or omission on the plans or specifications. In the event the Contractor discovers any apparent error or discrepancy, Contractor shall immediately notify the Owner or the designated representative in writing requesting their written interpretation and decision.

50-04 List of Special Provisions.

1. Retainage;
2. Insurance;
3. Taxes;
4. Independent Contractor; Further Assurances and Assistance;
5. Pennsylvania Right-To-Know Law;
6. Compliance with Steel Products Procurement Act;
7. Public Works Verification Act;
8. COVID-19 Interruptions;
9. Discrimination Prohibited;
10. Human Relations Act Compliance;

50-05 Cooperation of Contractor. The Contractor shall be supplied with an electronic PDF of the plans and specifications. The Contractor shall have available on the construction site at all times one hardcopy each of the plans and specifications. Additional hard copies of plans and specifications may be obtained by the Contractor for the cost of reproduction.

The Contractor shall give constant attention to the work to facilitate the progress thereof, and shall cooperate with the RPR and their inspectors and with other Contractors in every way possible. The Contractor shall have a competent superintendent on the work at all times who is fully authorized as their agent on the work. The superintendent shall be capable of reading and thoroughly understanding the plans and specifications and shall receive and fulfill instructions from the RPR or their authorized representative.

50-06 Cooperation between Contractors. The Owner reserves the right to contract for and perform other or additional work on or near the work covered by this contract.

When separate contracts are let within the limits of any one project, each Contractor shall conduct the work not to interfere with or hinder the progress of completion of the work being performed by other Contractors. Contractors working on the same project shall cooperate with each other as directed.

Each Contractor involved shall assume all liability, financial or otherwise, in connection with their own contract and shall protect and hold harmless the Owner from any and all damages or claims that may arise because of inconvenience, delays, or loss experienced because of the presence and operations of other Contractors working within the limits of the same project.

The Contractor shall arrange their work and shall place and dispose of the materials being used to not interfere with the operations of the other Contractors within the limits of the same project. The Contractor shall join their work with that of the others in an acceptable manner and shall perform it in proper sequence to that of the others.

50-07 Construction layout and stakes. The Engineer/RPR shall establish necessary horizontal and vertical control. The establishment of Survey Control and/or reestablishment of survey control shall be by a State Licensed Land Surveyor. Contractor is responsible for preserving integrity of horizontal and vertical controls established by Engineer/RPR. In case of negligence on the part of the Contractor or their

employees, resulting in the destruction of any horizontal and vertical control, the resulting costs will be deducted as a liquidated damage against the Contractor.

Prior to the start of construction, the Contractor will check all control points for horizontal and vertical accuracy and certify in writing to the RPR that the Contractor concurs with survey control established for the project. All lines, grades and measurements from control points necessary for the proper execution and control of the work on this project will be provided to the RPR. The Contractor is responsible to establish all layout required for the construction of the project.

Copies of survey notes will be provided to the RPR for each area of construction and for each placement of material as specified to allow the RPR to make periodic checks for conformance with plan grades, alignments and grade tolerances required by the applicable material specifications. Surveys will be provided to the RPR prior to commencing work items that cover or disturb the survey staking. Survey(s) and notes shall be provided in the following format(s): **AutoCAD Civil3D 2020 and .csv**.

Laser, GPS, String line, or other automatic control shall be checked with temporary control as necessary. In the case of error, on the part of the Contractor, their surveyor, employees or subcontractors, resulting in established grades, alignment or grade tolerances that do not concur with those specified or shown on the plans, the Contractor is solely responsible for correction, removal, replacement and all associated costs at no additional cost to the Owner.

No direct payment will be made, unless otherwise specified in contract documents, for this labor, materials, or other expenses. The cost shall be included in the price of the bid for the various items of the Contract.

50-08 Authority and duties of Quality Assurance (QA) inspectors. QA inspectors shall be authorized to inspect all work done and all material furnished. Such QA inspection may extend to all or any part of the work and to the preparation, fabrication, or manufacture of the materials to be used. QA inspectors are not authorized to revoke, alter, or waive any provision of the contract. QA inspectors are not authorized to issue instructions contrary to the plans and specifications or to act as foreman for the Contractor.

QA Inspectors are authorized to notify the Contractor or their representatives of any failure of the work or materials to conform to the requirements of the contract, plans, or specifications and to reject such nonconforming materials in question until such issues can be referred to the RPR for a decision.

50-09 Inspection of the work. All materials and each part or detail of the work shall be subject to inspection. The RPR shall be allowed access to all parts of the work and shall be furnished with such information and assistance by the Contractor as is required to make a complete and detailed inspection.

If the RPR requests it, the Contractor, at any time before acceptance of the work, shall remove or uncover such portions of the finished work as may be directed. After examination, the Contractor shall restore said portions of the work to the standard required by the specifications. Should the work thus exposed or examined prove acceptable, the uncovering, or removing, and the replacing of the covering or making good of the parts removed will be paid for as extra work; but should the work so exposed or examined prove unacceptable, the uncovering, or removing, and the replacing of the covering or making good of the parts removed will be at the Contractor’s expense.

Provide advance written notice to the RPR of work the Contractor plans to perform each week and each day. Any work done or materials used without written notice and allowing opportunity for inspection by the RPR may be ordered removed and replaced at the Contractor’s expense.

Should the contract work include relocation, adjustment, or any other modification to existing facilities, not the property of the (contract) Owner, authorized representatives of the Owners of such facilities shall have the right to inspect such work. Such inspection shall in no sense make any facility owner a party to the contract, and shall in no way interfere with the rights of the parties to this contract.

50-10 Removal of unacceptable and unauthorized work. All work that does not conform to the requirements of the contract, plans, and specifications will be considered unacceptable, unless otherwise determined acceptable by the RPR as provided in paragraph 50-02, *Conformity with Plans and Specifications*.

Unacceptable work, whether the result of poor workmanship, use of defective materials, damage through carelessness, or any other cause found to exist prior to the final acceptance of the work, shall be removed immediately and replaced in an acceptable manner in accordance with the provisions of Section 70, paragraph 70-14, *Contractor's Responsibility for Work*.

No removal work made under provision of this paragraph shall be done without lines and grades having been established by the RPR. Work done contrary to the instructions of the RPR, work done beyond the lines shown on the plans or as established by the RPR, except as herein specified, or any extra work done without authority, will be considered as unauthorized and will not be paid for under the provisions of the contract. Work so done may be ordered removed or replaced at the Contractor's expense.

Upon failure on the part of the Contractor to comply with any order of the RPR made under the provisions of this subsection, the RPR will have authority to cause unacceptable work to be remedied or removed and replaced; and unauthorized work to be removed and recover the resulting costs as a liquidated damage against the Contractor.

50-11 Load restrictions. The Contractor shall comply with all legal load restrictions in the hauling of materials on public roads beyond the limits of the work. A special permit will not relieve the Contractor of liability for damage that may result from the moving of material or equipment.

The operation of equipment of such weight or so loaded as to cause damage to structures or to any other type of construction will not be permitted. Hauling of materials over the base course or surface course under construction shall be limited as directed. No loads will be permitted on a concrete pavement, base, or structure before the expiration of the curing period. The Contractor, at their own expense, shall be responsible for the repair to equal or better than preconstruction conditions of any damage caused by the Contractor's equipment and personnel.

50-12 Maintenance during construction. The Contractor shall maintain the work during construction and until the work is accepted. Maintenance shall constitute continuous and effective work prosecuted day by day, with adequate equipment and forces so that the work is maintained in satisfactory condition at all times.

In the case of a contract for the placing of a course upon a course or subgrade previously constructed, the Contractor shall maintain the previous course or subgrade during all construction operations.

All costs of maintenance work during construction and before the project is accepted shall be included in the unit prices bid on the various contract items, and the Contractor will not be paid an additional amount for such work.

50-13 Failure to maintain the work. Should the Contractor at any time fail to maintain the work as provided in paragraph 50-12, *Maintenance during Construction*, the RPR shall immediately notify the Contractor of such noncompliance. Such notification shall specify a reasonable time within which the Contractor shall be required to remedy such unsatisfactory maintenance condition. The time specified will give due consideration to the exigency that exists.

Should the Contractor fail to respond to the RPR's notification, the Owner may suspend any work necessary for the Owner to correct such unsatisfactory maintenance condition, depending on the exigency that exists. Any maintenance cost incurred by the Owner, shall be recovered as a liquidated damage against the Contractor.

50-14 Partial acceptance. If at any time during the execution of the project the Contractor substantially completes a usable unit or portion of the work, the occupancy of which will benefit the Owner, the Contractor may request the RPR to make final inspection of that unit. If the RPR finds upon inspection that the unit has been satisfactorily completed in compliance with the contract, the RPR may accept it as being complete, and the Contractor may be relieved of further responsibility for that unit. Such partial acceptance and beneficial occupancy by the Owner shall not void or alter any provision of the contract.

50-15 Final acceptance. Upon due notice from the Contractor of presumptive completion of the entire project, the RPR and Owner will make an inspection. If all construction provided for and contemplated by the contract is found to be complete in accordance with the contract, plans, and specifications, such inspection shall constitute the final inspection. The RPR shall notify the Contractor in writing of final acceptance as of the date of the final inspection.

If, however, the inspection discloses any work, in whole or in part, as being unsatisfactory, the RPR will notify the Contractor and the Contractor shall correct the unsatisfactory work. Upon correction of the work, another inspection will be made which shall constitute the final inspection, provided the work has been satisfactorily completed. In such event, the RPR will make the final acceptance and notify the Contractor in writing of this acceptance as of the date of final inspection.

50-16 Claims for adjustment and disputes. If for any reason the Contractor deems that additional compensation is due for work or materials not clearly provided for in the contract, plans, or specifications or previously authorized as extra work, the Contractor shall notify the RPR in writing of their intention to claim such additional compensation before the Contractor begins the work on which the Contractor bases the claim. If such notification is not given or the RPR is not afforded proper opportunity by the Contractor for keeping strict account of actual cost as required, then the Contractor hereby agrees to waive any claim for such additional compensation. Such notice by the Contractor and the fact that the RPR has kept account of the cost of the work shall not in any way be construed as proving or substantiating the validity of the claim. When the work on which the claim for additional compensation is based has been completed, the Contractor shall, within 10 calendar days, submit a written claim to the RPR who will present it to the Owner for consideration in accordance with local laws or ordinances.

Nothing in this subsection shall be construed as a waiver of the Contractor’s right to dispute final payment based on differences in measurements or computations.

END OF SECTION 50

Section 60 Control of Materials

60-01 Source of supply and quality requirements. The materials used in the work shall conform to the requirements of the contract, plans, and specifications. Unless otherwise specified, such materials that are manufactured or processed shall be new (as compared to used or reprocessed).

In order to expedite the inspection and testing of materials, the Contractor shall furnish documentation to the RPR as to the origin, composition, and manufacture of all materials to be used in the work. Documentation shall be furnished promptly after execution of the contract but, in all cases, prior to delivery of such materials.

At the RPR's option, materials may be approved at the source of supply before delivery. If it is found after trial that sources of supply for previously approved materials do not produce specified products, the Contractor shall furnish materials from other sources.

The Contractor shall furnish airport lighting equipment that meets the requirements of the specifications; and is listed in AC 150/5345-53, *Airport Lighting Equipment Certification Program* and *Addendum*, that is in effect on the date of advertisement.

60-02 Samples, tests, and cited specifications. All materials used in the work shall be inspected, tested, and approved by the RPR before incorporation in the work unless otherwise designated. Any work in which untested materials are used without approval or written permission of the RPR shall be performed at the Contractor's risk. Materials found to be unacceptable and unauthorized will not be paid for and, if directed by the RPR, shall be removed at the Contractor's expense.

Unless otherwise designated, quality assurance tests will be made by and at the expense of the Owner in accordance with the cited standard methods of ASTM, American Association of State Highway and Transportation Officials (AASHTO), federal specifications, Commercial Item Descriptions, and all other cited methods, which are current on the date of advertisement for bids.

The testing organizations performing on-site quality assurance field tests shall have copies of all referenced standards on the construction site for use by all technicians and other personnel. Unless otherwise designated, samples for quality assurance will be taken by a qualified representative of the RPR. All materials being used are subject to inspection, test, or rejection at any time prior to or during incorporation into the work. Copies of all tests will be furnished to the Contractor's representative at their request after review and approval of the RPR.

A copy of all Contractor QC test data shall be provided to the RPR daily, along with printed reports, in an approved format, on a weekly basis. After completion of the project, and prior to final payment, the Contractor shall submit a final report to the RPR showing all test data reports, plus an analysis of all results showing ranges, averages, and corrective action taken on all failing tests.

60-03 Certification of compliance/analysis (COC/COA). The RPR may permit the use, prior to sampling and testing, of certain materials or assemblies when accompanied by manufacturer's COC stating that such materials or assemblies fully comply with the requirements of the contract. The certificate shall be signed by the manufacturer. Each lot of such materials or assemblies delivered to the work must be accompanied by a certificate of compliance in which the lot is clearly identified. The COA is the manufacturer's COC and includes all applicable test results.

Materials or assemblies used on the basis of certificates of compliance may be sampled and tested at any time and if found not to be in conformity with contract requirements will be subject to rejection whether in place or not.

The form and distribution of certificates of compliance shall be as approved by the RPR.

When a material or assembly is specified by "brand name or equal" and the Contractor elects to furnish the specified "or equal," the Contractor shall be required to furnish the manufacturer's certificate of compliance for each lot of such material or assembly delivered to the work. Such certificate of compliance shall clearly identify each lot delivered and shall certify as to:

a. Conformance to the specified performance, testing, quality or dimensional requirements; and,

b. Suitability of the material or assembly for the use intended in the contract work.

The RPR shall be the sole judge as to whether the proposed "or equal" is suitable for use in the work.

The RPR reserves the right to refuse permission for use of materials or assemblies on the basis of certificates of compliance.

60-04 Plant inspection. The RPR or their authorized representative may inspect, at its source, any specified material or assembly to be used in the work. Manufacturing plants may be inspected from time to time for the purpose of determining compliance with specified manufacturing methods or materials to be used in the work and to obtain samples required for acceptance of the material or assembly.

Should the RPR conduct plant inspections, the following conditions shall exist:

a. The RPR shall have the cooperation and assistance of the Contractor and the producer with whom the Contractor has contracted for materials.

b. The RPR shall have full entry at all reasonable times to such parts of the plant that concern the manufacture or production of the materials being furnished.

c. If required by the RPR, the Contractor shall arrange for adequate office or working space that may be reasonably needed for conducting plant inspections. Place office or working space in a convenient location with respect to the plant.

It is understood and agreed that the Owner shall have the right to retest any material that has been tested and approved at the source of supply after it has been delivered to the site. The RPR shall have the right to reject only material which, when retested, does not meet the requirements of the contract, plans, or specifications.

60-05 Engineer/ Resident Project Representative (RPR) field office. An Engineer/RPR field office is not required.

60-06 Storage of materials. Materials shall be stored to assure the preservation of their quality and fitness for the work. Stored materials, even though approved before storage, may again be inspected prior to their use in the work. Stored materials shall be located to facilitate their prompt inspection. The Contractor shall coordinate the storage of all materials with the RPR. Materials to be stored on airport property shall not create an obstruction to air navigation nor shall they interfere with the free and unobstructed movement of aircraft. Unless otherwise shown on the plans and/or CSPP, the storage of materials and the location of the Contractor's plant and parked equipment or vehicles shall be as directed by the RPR. Private property shall not be used for storage purposes without written permission of the Owner or lessee of such property. The Contractor shall make all arrangements and bear all expenses for the storage of materials on private property. Upon request, the Contractor shall furnish the RPR a copy of the property Owner's permission.

All storage sites on private or airport property shall be restored to their original condition by the Contractor at their expense, except as otherwise agreed to (in writing) by the Owner or lessee of the property.

60-07 Unacceptable materials. Any material or assembly that does not conform to the requirements of the contract, plans, or specifications shall be considered unacceptable and shall be rejected. The

Contractor shall remove any rejected material or assembly from the site of the work, unless otherwise instructed by the RPR.

Rejected material or assembly, the defects of which have been corrected by the Contractor, shall not be returned to the site of the work until such time as the RPR has approved its use in the work.

60-08 Owner furnished materials. The Contractor shall furnish all materials required to complete the work, except those specified, if any, to be furnished by the Owner. Owner-furnished materials shall be made available to the Contractor at the location specified.

All costs of handling, transportation from the specified location to the site of work, storage, and installing Owner-furnished materials shall be included in the unit price bid for the contract item in which such Owner-furnished material is used.

After any Owner-furnished material has been delivered to the location specified, the Contractor shall be responsible for any demurrage, damage, loss, or other deficiencies that may occur during the Contractor's handling, storage, or use of such Owner-furnished material. The Owner will deduct from any monies due or to become due the Contractor any cost incurred by the Owner in making good such loss due to the Contractor's handling, storage, or use of Owner-furnished materials.

END OF SECTION 60

Section 70 Legal Regulations and Responsibility to Public

70-01 Laws to be observed. The Contractor shall keep fully informed of all federal and state laws, all local laws, ordinances, and regulations and all orders and decrees of bodies or tribunals having any jurisdiction or authority, which in any manner affect those engaged or employed on the work, or which in any way affect the conduct of the work. The Contractor shall at all times observe and comply with all such laws, ordinances, regulations, orders, and decrees; and shall protect and indemnify the Owner and all their officers, agents, or servants against any claim or liability arising from or based on the violation of any such law, ordinance, regulation, order, or decree, whether by the Contractor or the Contractor's employees.

70-02 Permits, licenses, and taxes. The Contractor shall procure all permits and licenses, pay all charges, fees, and taxes, and give all notices necessary and incidental to the due and lawful execution of the work.

70-03 Patented devices, materials, and processes. If the Contractor is required or desires to use any design, device, material, or process covered by letters of patent or copyright, the Contractor shall provide for such use by suitable legal agreement with the Patentee or Owner. The Contractor and the surety shall indemnify and hold harmless the Owner, any third party, or political subdivision from any and all claims for infringement by reason of the use of any such patented design, device, material or process, or any trademark or copyright, and shall indemnify the Owner for any costs, expenses, and damages which it may be obliged to pay by reason of an infringement, at any time during the execution or after the completion of the work.

70-04 Restoration of surfaces disturbed by others. The Owner reserves the right to authorize the construction, reconstruction, or maintenance of any public or private utility service, FAA or National Oceanic and Atmospheric Administration (NOAA) facility, or a utility service of another government agency at any time during the progress of the work. To the extent that such construction, reconstruction, or maintenance has been coordinated with the Owner, such authorized work (by others) must be shown on the plans and is indicated as follows: None.

Except as listed above, the Contractor shall not permit any individual, firm, or corporation to excavate or otherwise disturb such utility services or facilities located within the limits of the work without the written permission of the RPR.

Should the Owner of public or private utility service, FAA, or NOAA facility, or a utility service of another government agency be authorized to construct, reconstruct, or maintain such utility service or facility during the progress of the work, the Contractor shall cooperate with such Owners by arranging and performing the work in this contract to facilitate such construction, reconstruction or maintenance by others whether or not such work by others is listed above. When ordered as extra work by the RPR, the Contractor shall make all necessary repairs to the work which are due to such authorized work by others, unless otherwise provided for in the contract, plans, or specifications. It is understood and agreed that the Contractor shall not be entitled to make any claim for damages due to such authorized work by others or for any delay to the work resulting from such authorized work.

70-05 Federal Participation. The United States Government has agreed to reimburse the Owner for some portion of the contract costs. The contract work is subject to the inspection and approval of duly authorized representatives of the FAA Administrator. No requirement of this contract shall be construed as making the United States a party to the contract nor will any such requirement interfere, in any way, with the rights of either party to the contract.

70-06 Sanitary, health, and safety provisions. The Contractor's worksite and facilities shall comply with applicable federal, state, and local requirements for health, safety and sanitary provisions.

70-07 Public convenience and safety. The Contractor shall control their operations and those of their subcontractors and all suppliers, to assure the least inconvenience to the traveling public. Under all circumstances, safety shall be the most important consideration.

The Contractor shall maintain the free and unobstructed movement of aircraft and vehicular traffic with respect to their own operations and those of their own subcontractors and all suppliers in accordance with Section 40, paragraph 40-05, *Maintenance of Traffic*, and shall limit such operations for the convenience and safety of the traveling public as specified in Section 80, paragraph 80-04, *Limitation of Operations*.

The Contractor shall remove or control debris and rubbish resulting from its work operations at frequent intervals, and upon the order of the RPR. If the RPR determines the existence of Contractor debris in the work site represents a hazard to airport operations and the Contractor is unable to respond in a prompt and reasonable manner, the RPR reserves the right to assign the task of debris removal to a third party and recover the resulting costs as a liquidated damage against the Contractor.

70-08 Construction Safety and Phasing Plan (CSPP). The Contractor shall complete the work in accordance with the approved Construction Safety and Phasing Plan (CSPP) developed in accordance with AC 150/5370-2, Operational Safety on Airports During Construction. The CSPP is in the project plans.

70-09 Use of explosives. The use of explosives is not permitted on this project.

70-10 Protection and restoration of property and landscape. The Contractor shall be responsible for the preservation of all public and private property, and shall protect carefully from disturbance or damage all land monuments and property markers until the Engineer/RPR has witnessed or otherwise referenced their location and shall not move them until directed.

The Contractor shall be responsible for all damage or injury to property of any character, during the execution of the work, resulting from any act, omission, neglect, or misconduct in manner or method of executing the work, or at any time due to defective work or materials, and said responsibility shall not be released until the project has been completed and accepted.

When or where any direct or indirect damage or injury is done to public or private property by or on account of any act, omission, neglect, or misconduct in the execution of the work, or in consequence of the non-execution thereof by the Contractor, the Contractor shall restore, at their expense, such property to a condition similar or equal to that existing before such damage or injury was done, by repairing, or otherwise restoring as may be directed, or the Contractor shall make good such damage or injury in an acceptable manner.

70-11 Responsibility for damage claims. The Contractor shall indemnify and hold harmless the Engineer/RPR and the Owner and their officers, agents, and employees from all suits, actions, or claims, of any character, brought because of any injuries or damage received or sustained by any person, persons, or property on account of the operations of the Contractor; or on account of or in consequence of any neglect in safeguarding the work; or through use of unacceptable materials in constructing the work; or because of any act or omission, neglect, or misconduct of said Contractor; or because of any claims or amounts recovered from any infringements of patent, trademark, or copyright; or from any claims or amounts arising or recovered under the "Workmen's Compensation Act," or any other law, ordinance, order, or decree. Money due the Contractor under and by virtue of their own contract considered necessary by the Owner for such purpose may be retained for the use of the Owner or, in case no money is due, their own surety may be held until such suits, actions, or claims for injuries or damages shall have been settled and suitable evidence to that effect furnished to the Owner, except that money due the Contractor will not be withheld when the Contractor produces satisfactory evidence that he or she is adequately protected by public liability and property damage insurance.

70-12 Third party beneficiary clause. It is specifically agreed between the parties executing the contract that it is not intended by any of the provisions of any part of the contract to create for the public or any member thereof, a third-party beneficiary or to authorize anyone not a party to the contract to maintain a suit for personal injuries or property damage pursuant to the terms or provisions of the contract.

70-13 Opening sections of the work to traffic. If it is necessary for the Contractor to complete portions of the contract work for the beneficial occupancy of the Owner prior to completion of the entire contract, such "phasing" of the work must be specified below and indicated on the approved Construction Safety and Phasing Plan (CSPP) and the project plans. When so specified, the Contractor shall complete such portions of the work on or before the date specified or as otherwise specified.

120 calendar days from Notice to Proceed to substantial completion.

Upon completion of any portion of work listed above, such portion shall be accepted by the Owner in accordance with Section 50, paragraph 50-14, *Partial Acceptance*.

No portion of the work may be opened by the Contractor until directed by the Owner in writing. Should it become necessary to open a portion of the work to traffic on a temporary or intermittent basis, such openings shall be made when, in the opinion of the RPR, such portion of the work is in an acceptable condition to support the intended traffic. Temporary or intermittent openings are considered to be inherent in the work and shall not constitute either acceptance of the portion of the work so opened or a waiver of any provision of the contract. Any damage to the portion of the work so opened that is not attributable to traffic which is permitted by the Owner shall be repaired by the Contractor at their expense.

The Contractor shall make their own estimate of the inherent difficulties involved in completing the work under the conditions herein described and shall not claim any added compensation by reason of delay or increased cost due to opening a portion of the contract work.

The Contractor must conform to safety standards contained AC 150/5370-2 and the approved CSPP.

Contractor shall refer to the plans, specifications, and the approved CSPP to identify barricade requirements, temporary and/or permanent markings, airfield lighting, guidance signs and other safety requirements prior to opening up sections of work to traffic.

70-14 Contractor's responsibility for work. Until the RPR's final written acceptance of the entire completed work, excepting only those portions of the work accepted in accordance with Section 50, paragraph 50-14, *Partial Acceptance*, the Contractor shall have the charge and care thereof and shall take every precaution against injury or damage to any part due to the action of the elements or from any other cause, whether arising from the execution or from the non-execution of the work. The Contractor shall rebuild, repair, restore, and make good all injuries or damages to any portion of the work occasioned by any of the above causes before final acceptance and shall bear the expense thereof except damage to the work due to unforeseeable causes beyond the control of and without the fault or negligence of the Contractor, including but not restricted to acts of God such as earthquake, tidal wave, tornado, hurricane or other cataclysmic phenomenon of nature, or acts of the public enemy or of government authorities.

If the work is suspended for any cause whatever, the Contractor shall be responsible for the work and shall take such precautions necessary to prevent damage to the work. The Contractor shall provide for normal drainage and shall erect necessary temporary structures, signs, or other facilities at their own expense. During such period of suspension of work, the Contractor shall properly and continuously maintain in an acceptable growing condition all living material in newly established planting, seeding, and sodding furnished under the contract, and shall take adequate precautions to protect new tree growth and other important vegetative growth against injury.

70-15 Contractor's responsibility for utility service and facilities of others. As provided in paragraph 70-04, *Restoration of Surfaces Disturbed by Others*, the Contractor shall cooperate with the owner of any

public or private utility service, FAA or NOAA, or a utility service of another government agency that may be authorized by the Owner to construct, reconstruct or maintain such utility services or facilities during the progress of the work. In addition, the Contractor shall control their operations to prevent the unscheduled interruption of such utility services and facilities.

To the extent that such public or private utility services, FAA, or NOAA facilities, or utility services of another governmental agency are known to exist within the limits of the contract work, the approximate locations have been indicated on the plans and/or in the contract documents.

It is understood and agreed that the Owner does not guarantee the accuracy or the completeness of the location information relating to existing utility services, facilities, or structures that may be shown on the plans or encountered in the work. Any inaccuracy or omission in such information shall not relieve the Contractor of the responsibility to protect such existing features from damage or unscheduled interruption of service.

It is further understood and agreed that the Contractor shall, upon execution of the contract, notify the Owners of all utility services or other facilities of their plan of operations. Such notification shall be in writing addressed to "The Person to Contact" as provided in this paragraph and paragraph 70-04, *Restoration of Surfaces Disturbed By Others*. A copy of each notification shall be given to the RPR.

In addition to the general written notification provided, it shall be the responsibility of the Contractor to keep such individual Owners advised of changes in their plan of operations that would affect such Owners.

Prior to beginning the work in the general vicinity of an existing utility service or facility, the Contractor shall again notify each such Owner of their plan of operation. If, in the Contractor's opinion, the Owner's assistance is needed to locate the utility service or facility or the presence of a representative of the Owner is desirable to observe the work, such advice should be included in the notification. Such notification shall be given by the most expeditious means to reach the utility owner's "Person to Contact" no later than two normal business days prior to the Contractor's commencement of operations in such general vicinity. The Contractor shall furnish a written summary of the notification to the RPR.

The Contractor's failure to give the two days' notice shall be cause for the Owner to suspend the Contractor's operations in the general vicinity of a utility service or facility.

Where the outside limits of an underground utility service have been located and staked on the ground, the Contractor shall be required to use hand excavation methods within 3 feet (1 m) of such outside limits at such points as may be required to ensure protection from damage due to the Contractor's operations.

Should the Contractor damage or interrupt the operation of a utility service or facility by accident or otherwise, the Contractor shall immediately notify the proper authority and the RPR and shall take all reasonable measures to prevent further damage or interruption of service. The Contractor, in such events, shall cooperate with the utility service or facility owner and the RPR continuously until such damage has been repaired and service restored to the satisfaction of the utility or facility owner.

The Contractor shall bear all costs of damage and restoration of service to any utility service or facility due to their operations whether due to negligence or accident. The Owner reserves the right to deduct such costs from any monies due or which may become due the Contractor, or their own surety.

70-15.1 FAA facilities and cable runs. The Contractor is hereby advised that the construction limits of the project include existing facilities and buried cable runs that are owned, operated and maintained by the FAA. The Contractor, during the execution of the project work, shall comply with the following:

a. The Contractor shall permit FAA maintenance personnel the right of access to the project work site for purposes of inspecting and maintaining all existing FAA owned facilities.

b. The Contractor shall provide notice to the FAA Air Traffic Organization (ATO)/Technical Operations/System Support Center (SSC) Point-of-Contact through the airport Owner a minimum of seven (7) calendar days prior to commencement of construction activities in order to permit sufficient time to locate and mark existing buried cables and to schedule any required facility outages.

c. If execution of the project work requires a facility outage, the Contractor shall contact the FAA Point-of-Contact a minimum of 72 hours prior to the time of the required outage.

d. Any damage to FAA cables, access roads, or FAA facilities during construction caused by the Contractor's equipment or personnel whether by negligence or accident will require the Contractor to repair or replace the damaged cables, access road, or FAA facilities to FAA requirements. The Contractor shall not bear the cost to repair damage to underground facilities or utilities improperly located by the FAA.

e. If the project work requires the cutting or splicing of FAA owned cables, the FAA Point-of-Contact shall be contacted a minimum of 72 hours prior to the time the cable work commences. The FAA reserves the right to have a FAA representative on site to observe the splicing of the cables as a condition of acceptance. All cable splices are to be accomplished in accordance with FAA specifications and require approval by the FAA Point-of-Contact as a condition of acceptance by the Owner. The Contractor is hereby advised that FAA restricts the location of where splices may be installed. If a cable splice is required in a location that is not permitted by FAA, the Contractor shall furnish and install a sufficient length of new cable that eliminates the need for any splice.

70-16 Furnishing rights-of-way. The Owner will be responsible for furnishing all rights-of-way upon which the work is to be constructed in advance of the Contractor's operations.

70-17 Personal liability of public officials. In carrying out any of the contract provisions or in exercising any power or authority granted by this contract, there shall be no liability upon the Engineer, RPR, their authorized representatives, or any officials of the Owner either personally or as an official of the Owner. It is understood that in such matters they act solely as agents and representatives of the Owner.

70-18 No waiver of legal rights. Upon completion of the work, the Owner will expeditiously make final inspection and notify the Contractor of final acceptance. Such final acceptance, however, shall not preclude or stop the Owner from correcting any measurement, estimate, or certificate made before or after completion of the work, nor shall the Owner be precluded or stopped from recovering from the Contractor or their surety, or both, such overpayment as may be sustained, or by failure on the part of the Contractor to fulfill their obligations under the contract. A waiver on the part of the Owner of any breach of any part of the contract shall not be held to be a waiver of any other or subsequent breach.

The Contractor, without prejudice to the terms of the contract, shall be liable to the Owner for latent defects, fraud, or such gross mistakes as may amount to fraud, or as regards the Owner's rights under any warranty or guaranty.

70-19 Environmental protection. The Contractor shall comply with all federal, state, and local laws and regulations controlling pollution of the environment. The Contractor shall take necessary precautions to prevent pollution of streams, lakes, ponds, and reservoirs with fuels, oils, asphalts, chemicals, or other harmful materials and to prevent pollution of the atmosphere from particulate and gaseous matter.

70-20 Archaeological and historical findings. Unless otherwise specified in this subsection, the Contractor is advised that the site of the work is not within any property, district, or site, and does not contain any building, structure, or object listed in the current National Register of Historic Places published by the United States Department of Interior.

Should the Contractor encounter, during their operations, any building, part of a building, structure, or object that is incongruous with its surroundings, the Contractor shall immediately cease operations in that

location and notify the RPR. The RPR will immediately investigate the Contractor's finding and the Owner will direct the Contractor to either resume operations or to suspend operations as directed.

Should the Owner order suspension of the Contractor's operations in order to protect an archaeological or historical finding, or order the Contractor to perform extra work, such shall be covered by an appropriate contract change order or supplemental agreement as provided in Section 40, paragraph 40-04, *Extra Work*, and Section 90, paragraph 90-05, *Payment for Extra Work*. If appropriate, the contract change order or supplemental agreement shall include an extension of contract time in accordance with Section 80, paragraph 80-07, *Determination and Extension of Contract Time*.

70-21 Insurance Requirements. See special provision

END OF SECTION 70

Page Intentionally Blank

Section 80 Execution and Progress

80-01 Subletting of contract. The Owner will not recognize any subcontractor on the work. The Contractor shall at all times when work is in progress be represented either in person, by a qualified superintendent, or by other designated, qualified representative who is duly authorized to receive and execute orders of the Resident Project Representative (RPR).

The Contractor shall perform, with his organization, an amount of work equal to at least **25** percent of the total contract cost.

Should the Contractor elect to assign their contract, said assignment shall be concurred in by the surety, shall be presented for the consideration and approval of the Owner, and shall be consummated only on the written approval of the Owner.

The Contractor shall provide copies of all subcontracts to the RPR 14 days prior to being utilized on the project. As a minimum, the information shall include the following:

- Subcontractor's legal company name.
- Subcontractor's legal company address, including County name.
- Principal contact person's name, telephone and fax number.
- Complete narrative description, and dollar value of the work to be performed by the subcontractor.
- Copies of required insurance certificates in accordance with the specifications.
- Minority/ non-minority status.

80-02 Notice to proceed (NTP). The Owners notice to proceed will state the date on which contract time commences. The Contractor is expected to commence project operations within 10 days of the NTP date. The Contractor shall notify the RPR at least 24 hours in advance of the time contract operations begins. The Contractor shall not commence any actual operations prior to the date on which the notice to proceed is issued by the Owner.

80-03 Execution and progress. Unless otherwise specified, the Contractor shall submit their coordinated construction schedule showing all work activities for the RPR's review and acceptance at least 10 days prior to the start of work. The Contractor's progress schedule, once accepted by the RPR, will represent the Contractor's baseline plan to accomplish the project in accordance with the terms and conditions of the Contract. The RPR will compare actual Contractor progress against the baseline schedule to determine that status of the Contractor's performance. The Contractor shall provide sufficient materials, equipment, and labor to guarantee the completion of the project in accordance with the plans and specifications within the time set forth in the proposal.

If the Contractor falls significantly behind the submitted schedule, the Contractor shall, upon the RPR's request, submit a revised schedule for completion of the work within the contract time and modify their operations to provide such additional materials, equipment, and labor necessary to meet the revised schedule. Should the execution of the work be discontinued for any reason, the Contractor shall notify the RPR at least 24 hours in advance of resuming operations.

The Contractor shall not commence any actual construction prior to the date on which the NTP is issued by the Owner.

The Contractor shall maintain the work schedule and provide an update and analysis of the progress schedule on a twice monthly basis, or as otherwise specified in the contract. Submission of the work schedule shall not relieve the Contractor of overall responsibility for scheduling, sequencing, and coordinating all work to comply with the requirements of the contract.

80-04 Limitation of operations. The Contractor shall control their operations and the operations of their subcontractors and all suppliers to provide for the free and unobstructed movement of aircraft in the air operations areas (AOA) of the airport.

When the work requires the Contractor to conduct their operations within an AOA of the airport, the work shall be coordinated with airport operations (through the RPR) at least 48 hours prior to commencement of such work. The Contractor shall not close an AOA until so authorized by the RPR and until the necessary temporary marking, signage and associated lighting is in place as provided in Section 70, paragraph 70-08, *Construction Safety and Phasing Plan (CSPP)*.

When the contract work requires the Contractor to work within an AOA of the airport on an intermittent basis (intermittent opening and closing of the AOA), the Contractor shall maintain constant communications as specified; immediately obey all instructions to vacate the AOA; and immediately obey all instructions to resume work in such AOA. Failure to maintain the specified communications or to obey instructions shall be cause for suspension of the Contractor's operations in the AOA until satisfactory conditions are provided. The areas of the AOA identified in the Construction Safety Phasing Plan (CSPP) and as listed below, cannot be closed to operating aircraft to permit the Contractor's operations on a continuous basis and will therefore be closed to aircraft operations intermittently as follows:

See phasing.

The Contractor shall be required to conform to safety standards contained in AC 150/5370-2, Operational Safety on Airports During Construction and the approved CSPP.

80-04.1 Operational safety on airport during construction. All Contractors' operations shall be conducted in accordance with the approved project Construction Safety and Phasing Plan (CSPP) and the Safety Plan Compliance Document (SPCD) and the provisions set forth within the current version of AC 150/5370-2, Operational Safety on Airports During Construction. The CSPP included within the contract documents conveys minimum requirements for operational safety on the airport during construction activities. The Contractor shall prepare and submit a SPCD that details how it proposes to comply with the requirements presented within the CSPP.

The Contractor shall implement all necessary safety plan measures prior to commencement of any work activity. The Contractor shall conduct routine checks to assure compliance with the safety plan measures.

The Contractor is responsible to the Owner for the conduct of all subcontractors it employs on the project. The Contractor shall assure that all subcontractors are made aware of the requirements of the CSPP and SPCD and that they implement and maintain all necessary measures.

No deviation or modifications may be made to the approved CSPP and SPCD unless approved in writing by the Owner. The necessary coordination actions to review Contractor proposed modifications to an approved CSPP or approved SPCD can require a significant amount of time.

80-05 Character of workers, methods, and equipment. The Contractor shall, at all times, employ sufficient labor and equipment for prosecuting the work to full completion in the manner and time required by the contract, plans, and specifications.

All workers shall have sufficient skill and experience to perform properly the work assigned to them. Workers engaged in special work or skilled work shall have sufficient experience in such work and in the operation of the equipment required to perform the work satisfactorily.

Any person employed by the Contractor or by any subcontractor who violates any operational regulations or operational safety requirements and, in the opinion of the RPR, does not perform his work in a proper and skillful manner or is intemperate or disorderly shall, at the written request of the RPR, be removed immediately by the Contractor or subcontractor employing such person, and shall not be employed again in any portion of the work without approval of the RPR.

Should the Contractor fail to remove such person or persons, or fail to furnish suitable and sufficient personnel for the proper execution of the work, the RPR may suspend the work by written notice until compliance with such orders.

All equipment that is proposed to be used on the work shall be of sufficient size and in such mechanical condition as to meet requirements of the work and to produce a satisfactory quality of work. Equipment used on any portion of the work shall not cause injury to previously completed work, adjacent property, or existing airport facilities due to its use.

When the methods and equipment to be used by the Contractor in accomplishing the work are not prescribed in the contract, the Contractor is free to use any methods or equipment that will accomplish the work in conformity with the requirements of the contract, plans, and specifications.

When the contract specifies the use of certain methods and equipment, such methods and equipment shall be used unless otherwise authorized by the RPR. If the Contractor desires to use a method or type of equipment other than specified in the contract, the Contractor may request authority from the RPR to do so. The request shall be in writing and shall include a full description of the methods and equipment proposed and of the reasons for desiring to make the change. If approval is given, it will be on the condition that the Contractor will be fully responsible for producing work in conformity with contract requirements. If, after trial use of the substituted methods or equipment, the RPR determines that the work produced does not meet contract requirements, the Contractor shall discontinue the use of the substitute method or equipment and shall complete the remaining work with the specified methods and equipment. The Contractor shall remove any deficient work and replace it with work of specified quality, or take such other corrective action as the RPR may direct. No change will be made in basis of payment for the contract items involved nor in contract time as a result of authorizing a change in methods or equipment under this paragraph.

80-06 Temporary suspension of the work. The Owner shall have the authority to suspend the work wholly, or in part, for such period or periods the Owner may deem necessary, due to unsuitable weather, or other conditions considered unfavorable for the execution of the work, or for such time necessary due to the failure on the part of the Contractor to carry out orders given or perform any or all provisions of the contract.

In the event that the Contractor is ordered by the Owner, in writing, to suspend work for some unforeseen cause not otherwise provided for in the contract and over which the Contractor has no control, the Contractor may be reimbursed for actual money expended on the work during the period of shutdown. No allowance will be made for anticipated profits. The period of shutdown shall be computed from the effective date of the written order to suspend work to the effective date of the written order to resume the work. Claims for such compensation shall be filed with the RPR within the time period stated in the RPR's order to resume work. The Contractor shall submit with their own claim information substantiating the amount shown on the claim. The RPR will forward the Contractor's claim to the Owner for consideration in accordance with local laws or ordinances. No provision of this article shall be construed as entitling the Contractor to compensation for delays due to inclement weather or for any other delay provided for in the contract, plans, or specifications.

If it becomes necessary to suspend work for an indefinite period, the Contractor shall store all materials in such manner that they will not become an obstruction nor become damaged in any way. The Contractor shall take every precaution to prevent damage or deterioration of the work performed and provide for

normal drainage of the work. The Contractor shall erect temporary structures where necessary to provide for traffic on, to, or from the airport.

80-07 Determination and extension of contract time. The number of calendar days shall be stated in the proposal and contract and shall be known as the Contract Time.

If the contract time requires extension for reasons beyond the Contractor's control, it shall be adjusted as follows:

80-07.1 Contract time based on calendar days. Contract Time based on calendar days shall consist of the number of calendar days stated in the contract counting from the effective date of the Notice to Proceed and including all Saturdays, Sundays, holidays, and non-work days. All calendar days elapsing between the effective dates of the Owner's orders to suspend and resume all work, due to causes not the fault of the Contractor, shall be excluded.

At the time of final payment, the contract time shall be increased in the same proportion as the cost of the actually completed quantities bears to the cost of the originally estimated quantities in the proposal. Such increase in the contract time shall not consider either cost of work or the extension of contract time that has been covered by a change order or supplemental agreement. Charges against the contract time will cease as of the date of final acceptance.

80-08 Failure to complete on time. For each calendar day or working day, as specified in the contract, that any work remains uncompleted after the contract time (including all extensions and adjustments as provided in paragraph 80-07, *Determination and Extension of Contract Time*) the sum specified in the contract and proposal as liquidated damages (LD) will be deducted from any money due or to become due the Contractor or their own surety. Such deducted sums shall not be deducted as a penalty but shall be considered as liquidation of a reasonable portion of damages including but not limited to additional engineering services that will be incurred by the Owner should the Contractor fail to complete the work in the time provided in their contract.

Schedule	Liquidated Damages Cost	Allowed Construction Time
Phase 1	$500/day	120 calendar days

The maximum construction time allowed for Schedules 1, 2, and 3 will be the sum of the time allowed for individual schedules but not more than 120 days. Permitting the Contractor to continue and finish the work or any part of it after the time fixed for its completion, or after the date to which the time for completion may have been extended, will in no way operate as a wavier on the part of the Owner of any of its rights under the contract.

80-09 Default and termination of contract. The Contractor shall be considered in default of their contract and such default will be considered as cause for the Owner to terminate the contract for any of the following reasons, if the Contractor:

a. Fails to begin the work under the contract within the time specified in the Notice to Proceed, or

b. Fails to perform the work or fails to provide sufficient workers, equipment and/or materials to assure completion of work in accordance with the terms of the contract, or

c. Performs the work unsuitably or neglects or refuses to remove materials or to perform anew such work as may be rejected as unacceptable and unsuitable, or

d. Discontinues the execution of the work, or

e. Fails to resume work which has been discontinued within a reasonable time after notice to do so, or

f. Becomes insolvent or is declared bankrupt, or commits any act of bankruptcy or insolvency, or

g. Allows any final judgment to stand against the Contractor unsatisfied for a period of 10 days, or

h. Makes an assignment for the benefit of creditors, or

i. For any other cause whatsoever, fails to carry on the work in an acceptable manner.

Should the Owner consider the Contractor in default of the contract for any reason above, the Owner shall immediately give written notice to the Contractor and the Contractor's surety as to the reasons for considering the Contractor in default and the Owner's intentions to terminate the contract.

If the Contractor or surety, within a period of 10 days after such notice, does not proceed in accordance therewith, then the Owner will, upon written notification from the RPR of the facts of such delay, neglect, or default and the Contractor's failure to comply with such notice, have full power and authority without violating the contract, to take the execution of the work out of the hands of the Contractor. The Owner may appropriate or use any or all materials and equipment that have been mobilized for use in the work and are acceptable and may enter into an agreement for the completion of said contract according to the terms and provisions thereof, or use such other methods as in the opinion of the RPR will be required for the completion of said contract in an acceptable manner.

All costs and charges incurred by the Owner, together with the cost of completing the work under contract, will be deducted from any monies due or which may become due the Contractor. If such expense exceeds the sum which would have been payable under the contract, then the Contractor and the surety shall be liable and shall pay to the Owner the amount of such excess.

80-10 Termination for national emergencies. The Owner shall terminate the contract or portion thereof by written notice when the Contractor is prevented from proceeding with the construction contract as a direct result of an Executive Order of the President with respect to the execution of war or in the interest of national defense.

When the contract, or any portion thereof, is terminated before completion of all items of work in the contract, payment will be made for the actual number of units or items of work completed at the contract price or as mutually agreed for items of work partially completed or not started. No claims or loss of anticipated profits shall be considered.

Reimbursement for organization of the work, and other overhead expenses, (when not otherwise included in the contract) and moving equipment and materials to and from the job will be considered, the intent being that an equitable settlement will be made with the Contractor.

Acceptable materials, obtained or ordered by the Contractor for the work and that are not incorporated in the work shall, at the option of the Contractor, be purchased from the Contractor at actual cost as shown by receipted bills and actual cost records at such points of delivery as may be designated by the RPR.

Termination of the contract or a portion thereof shall neither relieve the Contractor of their responsibilities for the completed work nor shall it relieve their surety of its obligation for and concerning any just claim arising out of the work performed.

80-11 Work area, storage area and sequence of operations. The Contractor shall obtain approval from the RPR prior to beginning any work in all areas of the airport. No operating runway, taxiway, or air operations area (AOA) shall be crossed, entered, or obstructed while it is operational. The Contractor shall plan and coordinate work in accordance with the approved CSPP and SPCD.

END OF SECTION 80

Section 90 Measurement and Payment

90-01 Measurement of quantities. All work completed under the contract will be measured by the RPR, or their authorized representatives, using United States Customary Units of Measurement.

The method of measurement and computations to be used in determination of quantities of material furnished and of work performed under the contract will be those methods generally recognized as conforming to good engineering practice.

Unless otherwise specified, longitudinal measurements for area computations will be made horizontally, and no deductions will be made for individual fixtures (or leave-outs) having an area of 9 square feet (0.8 square meters) or less. Unless otherwise specified, transverse measurements for area computations will be the neat dimensions shown on the plans or ordered in writing by the RPR.

Unless otherwise specified, all contract items which are measured by the linear foot such as electrical ducts, conduits, pipe culverts, underdrains, and similar items shall be measured parallel to the base or foundation upon which such items are placed.

The term "lump sum" when used as an item of payment will mean complete payment for the work described in the contract. When a complete structure or structural unit (in effect, "lump sum" work) is specified as the unit of measurement, the unit will be construed to include all necessary fittings and accessories.

When requested by the Contractor and approved by the RPR in writing, material specified to be measured by the cubic yard (cubic meter) may be weighed, and such weights will be converted to cubic yards (cubic meters) for payment purposes. Factors for conversion from weight measurement to volume measurement will be determined by the RPR and shall be agreed to by the Contractor before such method of measurement of pay quantities is used.

Measurement and Payment Terms

Term	Description
Excavation and Embankment Volume	In computing volumes of excavation, the average end area method will be used unless otherwise specified.
Measurement and Proportion by Weight	The term "ton" will mean the short ton consisting of 2,000 pounds (907 km) avoirdupois. All materials that are measured or proportioned by weights shall be weighed on accurate, independently certified scales by competent, qualified personnel at locations designated by the RPR. If material is shipped by rail, the car weight may be accepted provided that only the actual weight of material is paid for. However, car weights will not be acceptable for material to be passed through mixing plants. Trucks used to haul material being paid for by weight shall be weighed empty daily at such times as the RPR directs, and each truck shall bear a plainly legible identification mark.
Measurement by Volume	Materials to be measured by volume in the hauling vehicle shall be hauled in approved vehicles and measured therein at the point of delivery. Vehicles for this purpose may be of any size or type acceptable for the materials hauled, provided that the body is of such shape that the actual contents may be readily and accurately determined. All vehicles shall be loaded to at least their water level

Term	Description
	capacity, and all loads shall be leveled when the vehicles arrive at the point of delivery.
Asphalt Material	Asphalt materials will be measured by the gallon (liter) or ton (kg). When measured by volume, such volumes will be measured at 60°F (16°C) or will be corrected to the volume at 60°F (16°C) using ASTM D1250 for asphalts. Net certified scale weights or weights based on certified volumes in the case of rail shipments will be used as a basis of measurement, subject to correction when asphalt material has been lost from the car or the distributor, wasted, or otherwise not incorporated in the work. When asphalt materials are shipped by truck or transport, net certified weights by volume, subject to correction for loss or foaming, will be used for computing quantities.
Cement	Cement will be measured by the ton (kg) or hundredweight (km).
Structure	Structures will be measured according to neat lines shown on the plans or as altered to fit field conditions.
Timber	Timber will be measured by the thousand feet board measure (MFBM) actually incorporated in the structure. Measurement will be based on nominal widths and thicknesses and the extreme length of each piece.
Plates and Sheets	The thickness of plates and galvanized sheet used in the manufacture of corrugated metal pipe, metal plate pipe culverts and arches, and metal cribbing will be specified and measured in decimal fraction of inch.
Miscellaneous Items	When standard manufactured items are specified such as fence, wire, plates, rolled shapes, pipe conduit, etc., and these items are identified by gauge, unit weight, section dimensions, etc., such identification will be considered to be nominal weights or dimensions. Unless more stringently controlled by tolerances in cited specifications, manufacturing tolerances established by the industries involved will be accepted.
Scales	Scales must be tested for accuracy and serviced before use. Scales for weighing materials which are required to be proportioned or measured and paid for by weight shall be furnished, erected, and maintained by the Contractor, or be certified permanently installed commercial scales. Platform scales shall be installed and maintained with the platform level and rigid bulkheads at each end. Scales shall be accurate within 0.5% of the correct weight throughout the range of use. The Contractor shall have the scales checked under the observation of the RPR before beginning work and at such other times as requested. The intervals shall be uniform in spacing throughout the graduated or marked length of the beam or dial and shall not exceed 0.1% of the nominal rated capacity of the scale, but not less than one pound (454 grams). The use of spring balances will not be permitted. In the event inspection reveals the scales have been “overweighing” (indicating more than correct weight) they will be immediately adjusted. All materials

Term	Description
	received subsequent to the last previous correct weighting-accuracy test will be reduced by the percentage of error in excess of 0.5%. In the event inspection reveals the scales have been under-weighing (indicating less than correct weight), they shall be immediately adjusted. No additional payment to the Contractor will be allowed for materials previously weighed and recorded. Beams, dials, platforms, and other scale equipment shall be so arranged that the operator and the RPR can safely and conveniently view them. Scale installations shall have available ten standard 50-pound (2.3 km) weights for testing the weighing equipment or suitable weights and devices for other approved equipment. All costs in connection with furnishing, installing, certifying, testing, and maintaining scales; for furnishing check weights and scale house; and for all other items specified in this subsection, for the weighing of materials for proportioning or payment, shall be included in the unit contract prices for the various items of the project.
Rental Equipment	Rental of equipment will be measured by time in hours of actual working time and necessary traveling time of the equipment within the limits of the work. Special equipment ordered in connection with extra work will be measured as agreed in the change order or supplemental agreement authorizing such work as provided in paragraph 90-05 *Payment for Extra Work*.
Pay Quantities	When the estimated quantities for a specific portion of the work are designated as the pay quantities in the contract, they shall be the final quantities for which payment for such specific portion of the work will be made, unless the dimensions of said portions of the work shown on the plans are revised by the RPR. If revised dimensions result in an increase or decrease in the quantities of such work, the final quantities for payment will be revised in the amount represented by the authorized changes in the dimensions.

90-02 Scope of payment. The Contractor shall receive and accept compensation provided for in the contract as full payment for furnishing all materials, for performing all work under the contract in a complete and acceptable manner, and for all risk, loss, damage, or expense of whatever character arising out of the nature of the work or the execution thereof, subject to the provisions of Section 70, paragraph 70-18, *No Waiver of Legal Rights*.

When the "basis of payment" subsection of a technical specification requires that the contract price (price bid) include compensation for certain work or material essential to the item, this same work or material will not also be measured for payment under any other contract item which may appear elsewhere in the contract, plans, or specifications.

90-03 Compensation for altered quantities. When the accepted quantities of work vary from the quantities in the proposal, the Contractor shall accept as payment in full, so far as contract items are concerned, payment at the original contract price for the accepted quantities of work actually completed and accepted. No allowance, except as provided for in Section 40, paragraph 40-02, *Alteration of Work and Quantities*, will be made for any increased expense, loss of expected reimbursement, or loss of anticipated profits suffered or claimed by the Contractor which results directly from such alterations or

indirectly from their own unbalanced allocation of overhead and profit among the contract items, or from any other cause.

90-04 Payment for omitted items. As specified in Section 40, paragraph 40-03, *Omitted Items,* the RPR shall have the right to omit from the work (order nonperformance) any contract item, except major contract items, in the best interest of the Owner.

Should the RPR omit or order nonperformance of a contract item or portion of such item from the work, the Contractor shall accept payment in full at the contract prices for any work actually completed and acceptable prior to the RPR's order to omit or non-perform such contract item.

Acceptable materials ordered by the Contractor or delivered on the work prior to the date of the RPR's order will be paid for at the actual cost to the Contractor and shall thereupon become the property of the Owner.

In addition to the reimbursement hereinbefore provided, the Contractor shall be reimbursed for all actual costs incurred for the purpose of performing the omitted contract item prior to the date of the RPR's order. Such additional costs incurred by the Contractor must be directly related to the deleted contract item and shall be supported by certified statements by the Contractor as to the nature the amount of such costs.

90-05 Payment for extra work. Extra work, performed in accordance with Section 40, paragraph 40-04, *Extra Work,* will be paid for at the contract prices or agreed prices specified in the change order or supplemental agreement authorizing the extra work.

90-06 Partial payments. Partial payments will be made to the Contractor at least once each month as the work progresses. Said payments will be based upon estimates, prepared by the RPR, of the value of the work performed and materials complete and in place, in accordance with the contract, plans, and specifications. Such partial payments may also include the delivered actual cost of those materials stockpiled and stored in accordance with paragraph 90-07, *Payment for Materials on Hand*. No partial payment will be made when the amount due to the Contractor since the last estimate amounts to less than five hundred dollars.

See special provisions for retainage details.

It is understood and agreed that the Contractor shall not be entitled to demand or receive partial payment based on quantities of work in excess of those provided in the proposal or covered by approved change orders or supplemental agreements, except when such excess quantities have been determined by the RPR to be a part of the final quantity for the item of work in question.

No partial payment shall bind the Owner to the acceptance of any materials or work in place as to quality or quantity. All partial payments are subject to correction at the time of final payment as provided in paragraph 90-09, *Acceptance and Final Payment*.

The Contractor shall deliver to the Owner a complete release of all claims for labor and material arising out of this contract before the final payment is made. If any subcontractor or supplier fails to furnish such a release in full, the Contractor may furnish a bond or other collateral satisfactory to the Owner to indemnify the Owner against any potential lien or other such claim. The bond or collateral shall include all costs, expenses, and attorney fees the Owner may be compelled to pay in discharging any such lien or claim.

90-07 Payment for materials on hand. Partial payments may be made to the extent of the delivered cost of materials to be incorporated in the work, provided that such materials meet the requirements of the contract, plans, and specifications and are delivered to acceptable sites on the airport property or at other sites in the vicinity that are acceptable to the Owner. Such delivered costs of stored or stockpiled materials may be included in the next partial payment after the following conditions are met:

a. The material has been stored or stockpiled in a manner acceptable to the RPR at or on an approved site.

b. The Contractor has furnished the RPR with acceptable evidence of the quantity and quality of such stored or stockpiled materials.

c. The Contractor has furnished the RPR with satisfactory evidence that the material and transportation costs have been paid.

d. The Contractor has furnished the Owner legal title (free of liens or encumbrances of any kind) to the material stored or stockpiled.

e. The Contractor has furnished the Owner evidence that the material stored or stockpiled is insured against loss by damage to or disappearance of such materials at any time prior to use in the work.

It is understood and agreed that the transfer of title and the Owner's payment for such stored or stockpiled materials shall in no way relieve the Contractor of their responsibility for furnishing and placing such materials in accordance with the requirements of the contract, plans, and specifications.

In no case will the amount of partial payments for materials on hand exceed the contract price for such materials or the contract price for the contract item in which the material is intended to be used.

No partial payment will be made for stored or stockpiled living or perishable plant materials.

The Contractor shall bear all costs associated with the partial payment of stored or stockpiled materials in accordance with the provisions of this paragraph.

90-08 Payment of withheld funds. At the Contractor's option, if an Owner withholds retainage in accordance with the methods described in paragraph 90-06 *Partial Payments*, the Contractor may request that the Owner deposit the retainage into an escrow account. The Owner's deposit of retainage into an escrow account is subject to the following conditions:

a. The Contractor shall bear all expenses of establishing and maintaining an escrow account and escrow agreement acceptable to the Owner.

b. The Contractor shall deposit to and maintain in such escrow only those securities or bank certificates of deposit as are acceptable to the Owner and having a value not less than the retainage that would otherwise be withheld from partial payment.

c. The Contractor shall enter into an escrow agreement satisfactory to the Owner.

d. The Contractor shall obtain the written consent of the surety to such agreement.

90-09 Acceptance and final payment. When the contract work has been accepted in accordance with the requirements of Section 50, paragraph 50-15, *Final Acceptance*, the RPR will prepare the final estimate of the items of work actually performed. The Contractor shall approve the RPR's final estimate or advise the RPR of the Contractor's objections to the final estimate which are based on disputes in measurements or computations of the final quantities to be paid under the contract as amended by change order or supplemental agreement. The Contractor and the RPR shall resolve all disputes (if any) in the measurement and computation of final quantities to be paid within 30 calendar days of the Contractor's receipt of the RPR's final estimate. If, after such 30-day period, a dispute still exists, the Contractor may approve the RPR's estimate under protest of the quantities in dispute, and such disputed quantities shall be considered by the Owner as a claim in accordance with Section 50, paragraph 50-16, *Claims for Adjustment and Disputes*.

After the Contractor has approved, or approved under protest, the RPR's final estimate, and after the RPR's receipt of the project closeout documentation required in paragraph 90-11, *Contractor Final Project Documentation,* final payment will be processed based on the entire sum, or the undisputed sum

in case of approval under protest, determined to be due the Contractor less all previous payments and all amounts to be deducted under the provisions of the contract. All prior partial estimates and payments shall be subject to correction in the final estimate and payment.

If the Contractor has filed a claim for additional compensation under the provisions of Section 50, paragraph 50-16, *Claims for Adjustments and Disputes,* or under the provisions of this paragraph, such claims will be considered by the Owner in accordance with local laws or ordinances. Upon final adjudication of such claims, any additional payment determined to be due the Contractor will be paid pursuant to a supplemental final estimate.

90-10 Construction warranty.

a. In addition to any other warranties in this contract, the Contractor warrants that work performed under this contract conforms to the contract requirements and is free of any defect in equipment, material, workmanship, or design furnished, or performed by the Contractor or any subcontractor or supplier at any tier.

b. This warranty shall continue for a period of one year from the date of final acceptance of the work, except as noted. If the Owner takes possession of any part of the work before final acceptance, this warranty shall continue for a period of one year from the date the Owner takes possession. However, this will not relieve the Contractor from corrective items required by the final acceptance of the project work. Light Emitting Diode emitting diode (LED) light fixtures with the exception of obstruction lighting, must be warranted by the manufacturer for a minimum of four (4) years after date of installation inclusive of all electronics.

c. The Contractor shall remedy at the Contractor's expense any failure to conform, or any defect. In addition, the Contractor shall remedy at the Contractor's expense any damage to Owner real or personal property, when that damage is the result of the Contractor's failure to conform to contract requirements; or any defect of equipment, material, workmanship, or design furnished by the Contractor.

d. The Contractor shall restore any work damaged in fulfilling the terms and conditions of this clause. The Contractor's warranty with respect to work repaired or replaced will run for one year from the date of repair or replacement.

e. The Owner will notify the Contractor, in writing, within seven (7) days after the discovery of any failure, defect, or damage.

f. If the Contractor fails to remedy any failure, defect, or damage within 14 days after receipt of notice, the Owner shall have the right to replace, repair, or otherwise remedy the failure, defect, or damage at the Contractor's expense.

g. With respect to all warranties, express or implied, from subcontractors, manufacturers, or suppliers for work performed and materials furnished under this contract, the Contractor shall: (1) Obtain all warranties that would be given in normal commercial practice; (2) Require all warranties to be executed, in writing, for the benefit of the Owner, as directed by the Owner, and (3) Enforce all warranties for the benefit of the Owner.

h. This warranty shall not limit the Owner's rights with respect to latent defects, gross mistakes, or fraud.

90-11 Contractor Final Project Documentation. Approval of final payment to the Contractor is contingent upon completion and submittal of the items listed below. The final payment will not be approved until the RPR approves the Contractor's final submittal. The Contractor shall:

a. Provide two (2) copies of all manufacturers warranties specified for materials, equipment, and installations.

b. Provide weekly payroll records (not previously received) from the general Contractor and all subcontractors.

c. Complete final cleanup in accordance with Section 40, paragraph 40-08, *Final Cleanup*.

d. Complete all punch list items identified during the Final Inspection.

e. Provide complete release of all claims for labor and material arising out of the Contract.

f. Provide a certified statement signed by the subcontractors, indicating actual amounts paid to the Disadvantaged Business Enterprise (DBE) subcontractors and/or suppliers associated with the project.

g. When applicable per state requirements, return copies of sales tax completion forms.

h. Manufacturer's certifications for all items incorporated in the work.

i. All required record drawings, as-built drawings or as-constructed drawings.

j. Project Operation and Maintenance (O&M) Manual(s).

k. Security for Construction Warranty.

l. Equipment commissioning documentation submitted, if required.

END OF SECTION 90

AIA® Document A201® – 2017

General Conditions of the Contract for Construction

for the following PROJECT:
(Name and location or address)

Erie International Airport Passenger Boarding Bridge -Gate 3
Erie International Airport
Tom Ridge Field
4411 West 12th Street
Erie, Pennsylvania 16505

THE OWNER:
(Name, legal status and address)

Erie Regional Airport Authority
4411 West 12th Street
Erie, Pennsylvania 16505

THE ARCHITECT:
(Name, legal status and address)

Mr. Sean Thompson, PE
Mead & Hunt
2605 Port Lansing Road
Lansing, Michigan 48906

ADDITIONS AND DELETIONS:
The author of this document has added information needed for its completion. The author may also have revised the text of the original AIA standard form. An *Additions and Deletions Report* that notes added information as well as revisions to the standard form text is available from the author and should be reviewed. A vertical line in the left margin of this document indicates where the author has added necessary information and where the author has added to or deleted from the original AIA text.

This document has important legal consequences. Consultation with an attorney is encouraged with respect to its completion or modification.

For guidance in modifying this document to include supplementary conditions, see AIA Document A503™, Guide for Supplementary Conditions.

TABLE OF ARTICLES

1 GENERAL PROVISIONS
2 OWNER
3 CONTRACTOR
4 ARCHITECT
5 SUBCONTRACTORS
6 CONSTRUCTION BY OWNER OR BY SEPARATE CONTRACTORS
7 CHANGES IN THE WORK
8 TIME
9 PAYMENTS AND COMPLETION
10 PROTECTION OF PERSONS AND PROPERTY
11 INSURANCE AND BONDS
12 UNCOVERING AND CORRECTION OF WORK

Init.
/

AIA Document A201® – 2017. Copyright © 1911, 1915, 1918, 1925, 1937, 1951, 1958, 1961, 1963, 1966, 1970, 1976, 1987, 1997, 2007 and 2017 by The American Institute of Architects. All rights reserved. The "American Institute of Architects," "AIA," the AIA Logo, "A201," and "AIA Contract Documents" are registered trademarks and may not be used without permission. This document was produced by AIA software at 11:45:22 ET on 02/16/2021 under Order No.6324187910 which expires on 02/16/2022, is not for resale, is licensed for one-time use only, and may only be used in accordance with the AIA Contract Documents® Terms of Service. To report copyright violations, e-mail copyright@aia.org.
User Notes: (1697986356)

13 MISCELLANEOUS PROVISIONS

14 TERMINATION OR SUSPENSION OF THE CONTRACT

15 CLAIMS AND DISPUTES

Init.
/

AIA Document A201® – 2017. Copyright © 1911, 1915, 1918, 1925, 1937, 1951, 1958, 1961, 1963, 1966, 1970, 1976, 1987, 1997, 2007 and 2017 by The American Institute of Architects. All rights reserved. The "American Institute of Architects," "AIA," the AIA Logo, "A201," and "AIA Contract Documents" are registered trademarks and may not be used without permission. This document was produced by AIA software at 11:45:22 ET on 02/16/2021 under Order No.6324187910 which expires on 02/16/2022, is not for resale, is licensed for one-time use only, and may only be used in accordance with the AIA Contract Documents® Terms of Service. To report copyright violations, e-mail copyright@aia.org.
User Notes: (1697986356)

INDEX
(Topics and numbers in bold are Section headings.)

Acceptance of Nonconforming Work
9.6.6, 9.9.3, **12.3**
Acceptance of Work
9.6.6, 9.8.2, 9.9.3, 9.10.1, 9.10.3, 12.3
Access to Work
3.16, 6.2.1, 12.1
Accident Prevention
10
Acts and Omissions
3.2, 3.3.2, 3.12.8, 3.18, 4.2.3, 8.3.1, 9.5.1, 10.2.5, 10.2.8, 13.3.2, 14.1, 15.1.2, 15.2
Addenda
1.1.1
Additional Costs, Claims for
3.7.4, 3.7.5, 10.3.2, 15.1.5
Additional Inspections and Testing
9.4.2, 9.8.3, 12.2.1, **13.4**
Additional Time, Claims for
3.2.4, 3.7.4, 3.7.5, 3.10.2, 8.3.2, **15.1.6**
Administration of the Contract
3.1.3, **4.2**, 9.4, 9.5
Advertisement or Invitation to Bid
1.1.1
Aesthetic Effect
4.2.13
Allowances
3.8
Applications for Payment
4.2.5, 7.3.9, 9.2, **9.3**, 9.4, 9.5.1, 9.5.4, 9.6.3, 9.7, 9.10
Approvals
2.1.1, 2.3.1, 2.5, 3.1.3, 3.10.2, 3.12.8, 3.12.9, 3.12.10.1, 4.2.7, 9.3.2, 13.4.1
Arbitration
8.3.1, 15.3.2, **15.4**
ARCHITECT
4
Architect, Definition of
4.1.1
Architect, Extent of Authority
2.5, 3.12.7, 4.1.2, 4.2, 5.2, 6.3, 7.1.2, 7.3.4, 7.4, 9.2, 9.3.1, 9.4, 9.5, 9.6.3, 9.8, 9.10.1, 9.10.3, 12.1, 12.2.1, 13.4.1, 13.4.2, 14.2.2, 14.2.4, 15.1.4, 15.2.1
Architect, Limitations of Authority and Responsibility
2.1.1, 3.12.4, 3.12.8, 3.12.10, 4.1.2, 4.2.1, 4.2.2, 4.2.3, 4.2.6, 4.2.7, 4.2.10, 4.2.12, 4.2.13, 5.2.1, 7.4, 9.4.2, 9.5.4, 9.6.4, 15.1.4, 15.2
Architect's Additional Services and Expenses
2.5, 12.2.1, 13.4.2, 13.4.3, 14.2.4
Architect's Administration of the Contract
3.1.3, 3.7.4, 15.2, 9.4.1, 9.5
Architect's Approvals
2.5, 3.1.3, 3.5, 3.10.2, 4.2.7
Architect's Authority to Reject Work
3.5, 4.2.6, 12.1.2, 12.2.1
Architect's Copyright
1.1.7, 1.5
Architect's Decisions
3.7.4, 4.2.6, 4.2.7, 4.2.11, 4.2.12, 4.2.13, 4.2.14, 6.3, 7.3.4, 7.3.9, 8.1.3, 8.3.1, 9.2, 9.4.1, 9.5, 9.8.4, 9.9.1, 13.4.2, 15.2
Architect's Inspections
3.7.4, 4.2.2, 4.2.9, 9.4.2, 9.8.3, 9.9.2, 9.10.1, 13.4
Architect's Instructions
3.2.4, 3.3.1, 4.2.6, 4.2.7, 13.4.2
Architect's Interpretations
4.2.11, 4.2.12
Architect's Project Representative
4.2.10
Architect's Relationship with Contractor
1.1.2, 1.5, 2.3.3, 3.1.3, 3.2.2, 3.2.3, 3.2.4, 3.3.1, 3.4.2, 3.5, 3.7.4, 3.7.5, 3.9.2, 3.9.3, 3.10, 3.11, 3.12, 3.16, 3.18, 4.1.2, 4.2, 5.2, 6.2.2, 7, 8.3.1, 9.2, 9.3, 9.4, 9.5, 9.7, 9.8, 9.9, 10.2.6, 10.3, 11.3, 12, 13.3.2, 13.4, 15.2
Architect's Relationship with Subcontractors
1.1.2, 4.2.3, 4.2.4, 4.2.6, 9.6.3, 9.6.4, 11.3
Architect's Representations
9.4.2, 9.5.1, 9.10.1
Architect's Site Visits
3.7.4, 4.2.2, 4.2.9, 9.4.2, 9.5.1, 9.9.2, 9.10.1, 13.4
Asbestos
10.3.1
Attorneys' Fees
3.18.1, 9.6.8, 9.10.2, 10.3.3
Award of Separate Contracts
6.1.1, 6.1.2
Award of Subcontracts and Other Contracts for Portions of the Work
5.2
Basic Definitions
1.1
Bidding Requirements
1.1.1
Binding Dispute Resolution
8.3.1, 9.7, 11.5, 13.1, 15.1.2, 15.1.3, 15.2.1, 15.2.5, 15.2.6.1, 15.3.1, 15.3.2, 15.3.3, 15.4.1
Bonds, Lien
7.3.4.4, 9.6.8, 9.10.2, 9.10.3
Bonds, Performance, and Payment
7.3.4.4, 9.6.7, 9.10.3, **11.1.2**, 11.1.3, **11.5**
Building Information Models Use and Reliance
1.8
Building Permit
3.7.1
Capitalization
1.3
Certificate of Substantial Completion
9.8.3, 9.8.4, 9.8.5

Init.
/
AIA Document A201® – 2017. Copyright © 1911, 1915, 1918, 1925, 1937, 1951, 1958, 1961, 1963, 1966, 1970, 1976, 1987, 1997, 2007 and 2017 by The American Institute of Architects. All rights reserved. The "American Institute of Architects," "AIA," the AIA Logo, "A201," and "AIA Contract Documents" are registered trademarks and may not be used without permission. This document was produced by AIA software at 11:45:22 ET on 02/16/2021 under Order No.6324187910 which expires on 02/16/2022, is not for resale, is licensed for one-time use only, and may only be used in accordance with the AIA Contract Documents® Terms of Service. To report copyright violations, e-mail copyright@aia.org.
User Notes: (1697986356)

Certificates for Payment
4.2.1, 4.2.5, 4.2.9, 9.3.3, **9.4**, 9.5, 9.6.1, 9.6.6, 9.7, 9.10.1, 9.10.3, 14.1.1.3, 14.2.4, 15.1.4
Certificates of Inspection, Testing or Approval
13.4.4
Certificates of Insurance
9.10.2
Change Orders
1.1.1, 3.4.2, 3.7.4, 3.8.2.3, 3.11, 3.12.8, 4.2.8, 5.2.3, 7.1.2, 7.1.3, **7.2**, 7.3.2, 7.3.7, 7.3.9, 7.3.10, 8.3.1, 9.3.1.1, 9.10.3, 10.3.2, 11.2, 11.5, 12.1.2
Change Orders, Definition of
7.2.1
CHANGES IN THE WORK
2.2.2, 3.11, 4.2.8, **7**, 7.2.1, 7.3.1, 7.4, 8.3.1, 9.3.1.1, 11.5
Claims, Definition of
15.1.1
Claims, Notice of
1.6.2, 15.1.3
CLAIMS AND DISPUTES
3.2.4, 6.1.1, 6.3, 7.3.9, 9.3.3, 9.10.4, 10.3.3, **15**, 15.4
Claims and Timely Assertion of Claims
15.4.1
Claims for Additional Cost
3.2.4, 3.3.1, 3.7.4, 7.3.9, 9.5.2, 10.2.5, 10.3.2, **15.1.5**
Claims for Additional Time
3.2.4, 3.3.1, 3.7.4, 6.1.1, 8.3.2, 9.5.2, 10.3.2, **15.1.6**
Concealed or Unknown Conditions, Claims for
3.7.4
Claims for Damages
3.2.4, 3.18, 8.3.3, 9.5.1, 9.6.7, 10.2.5, 10.3.3, 11.3, 11.3.2, 14.2.4, 15.1.7
Claims Subject to Arbitration
15.4.1
Cleaning Up
3.15, 6.3
Commencement of the Work, Conditions Relating to
2.2.1, 3.2.2, 3.4.1, 3.7.1, 3.10.1, 3.12.6, 5.2.1, 5.2.3, 6.2.2, 8.1.2, 8.2.2, 8.3.1, 11.1, 11.2, **15.1.5**
Commencement of the Work, Definition of
8.1.2
Communications
3.9.1, **4.2.4**
Completion, Conditions Relating to
3.4.1, 3.11, 3.15, 4.2.2, 4.2.9, 8.2, 9.4.2, 9.8, 9.9.1, 9.10, 12.2, 14.1.2, 15.1.2
COMPLETION, PAYMENTS AND
9
Completion, Substantial
3.10.1, 4.2.9, 8.1.1, 8.1.3, 8.2.3, 9.4.2, 9.8, 9.9.1, 9.10.3, 12.2, 15.1.2
Compliance with Laws
2.3.2, 3.2.3, 3.6, 3.7, 3.12.10, 3.13, 9.6.4, 10.2.2, 13.1, 13.3, 13.4.1, 13.4.2, 13.5, 14.1.1, 14.2.1.3, 15.2.8, 15.4.2, 15.4.3
Concealed or Unknown Conditions
3.7.4, 4.2.8, 8.3.1, 10.3
Conditions of the Contract
1.1.1, 6.1.1, 6.1.4
Consent, Written
3.4.2, 3.14.2, 4.1.2, 9.8.5, 9.9.1, 9.10.2, 9.10.3, 13.2, 15.4.4.2
Consolidation or Joinder
15.4.4
CONSTRUCTION BY OWNER OR BY SEPARATE CONTRACTORS
1.1.4, **6**
Construction Change Directive, Definition of
7.3.1
Construction Change Directives
1.1.1, 3.4.2, 3.11, 3.12.8, 4.2.8, 7.1.1, 7.1.2, 7.1.3, **7.3**, 9.3.1.1
Construction Schedules, Contractor's
3.10, 3.11, 3.12.1, 3.12.2, 6.1.3, 15.1.6.2
Contingent Assignment of Subcontracts
5.4, 14.2.2.2
Continuing Contract Performance
15.1.4
Contract, Definition of
1.1.2
CONTRACT, TERMINATION OR SUSPENSION OF THE
5.4.1.1, 5.4.2, 11.5, **14**
Contract Administration
3.1.3, 4, 9.4, 9.5
Contract Award and Execution, Conditions Relating to
3.7.1, 3.10, 5.2, 6.1
Contract Documents, Copies Furnished and Use of
1.5.2, 2.3.6, 5.3
Contract Documents, Definition of
1.1.1
Contract Sum
2.2.2, 2.2.4, 3.7.4, 3.7.5, 3.8, 3.10.2, 5.2.3, 7.3, 7.4, **9.1**, 9.2, 9.4.2, 9.5.1.4, 9.6.7, 9.7, 10.3.2, 11.5, 12.1.2, 12.3, 14.2.4, 14.3.2, 15.1.4.2, **15.1.5, 15.2.5**
Contract Sum, Definition of
9.1
Contract Time
1.1.4, 2.2.1, 2.2.2, 3.7.4, 3.7.5, 3.10.2, 5.2.3, 6.1.5, 7.2.1.3, 7.3.1, 7.3.5, 7.3.6, 7, 7, 7.3.10, 7.4, 8.1.1, 8.2.1, 8.2.3, 8.3.1, 9.5.1, 9.7, 10.3.2, 12.1.1, 12.1.2, 14.3.2, 15.1.4.2, 15.1.6.1, 15.2.5
Contract Time, Definition of
8.1.1
CONTRACTOR
3
Contractor, Definition of
3.1, 6.1.2
Contractor's Construction and Submittal Schedules
3.10, 3.12.1, 3.12.2, 4.2.3, 6.1.3, 15.1.6.2

Init.
/
AIA Document A201® – 2017. Copyright © 1911, 1915, 1918, 1925, 1937, 1951, 1958, 1961, 1963, 1966, 1970, 1976, 1987, 1997, 2007 and 2017 by The American Institute of Architects. All rights reserved. The "American Institute of Architects," "AIA," the AIA Logo, "A201," and "AIA Contract Documents" are registered trademarks and may not be used without permission. This document was produced by AIA software at 11:45:22 ET on 02/16/2021 under Order No.6324187910 which expires on 02/16/2022, is not for resale, is licensed for one-time use only, and may only be used in accordance with the AIA Contract Documents® Terms of Service. To report copyright violations, e-mail copyright@aia.org.
User Notes:
(1697986356)

Contractor's Employees
2.2.4, 3.3.2, 3.4.3, 3.8.1, 3.9, 3.18.2, 4.2.3, 4.2.6, 10.2, 10.3, 11.3, 14.1, 14.2.1.1
Contractor's Liability Insurance
11.1
Contractor's Relationship with Separate Contractors and Owner's Forces
3.12.5, 3.14.2, 4.2.4, 6, 11.3, 12.2.4
Contractor's Relationship with Subcontractors
1.2.2, 2.2.4, 3.3.2, 3.18.1, 3.18.2, 4.2.4, 5, 9.6.2, 9.6.7, 9.10.2, 11.2, 11.3, 11.4
Contractor's Relationship with the Architect
1.1.2, 1.5, 2.3.3, 3.1.3, 3.2.2, 3.2.3, 3.2.4, 3.3.1, 3.4.2, 3.5.1, 3.7.4, 3.10, 3.11, 3.12, 3.16, 3.18, 4.2, 5.2, 6.2.2, 7, 8.3.1, 9.2, 9.3, 9.4, 9.5, 9.7, 9.8, 9.9, 10.2.6, 10.3, 11.3, 12, 13.4, 15.1.3, 15.2.1
Contractor's Representations
3.2.1, 3.2.2, 3.5, 3.12.6, 6.2.2, 8.2.1, 9.3.3, 9.8.2
Contractor's Responsibility for Those Performing the Work
3.3.2, 3.18, 5.3, 6.1.3, 6.2, 9.5.1, 10.2.8
Contractor's Review of Contract Documents
3.2
Contractor's Right to Stop the Work
2.2.2, 9.7
Contractor's Right to Terminate the Contract
14.1
Contractor's Submittals
3.10, 3.11, 3.12, 4.2.7, 5.2.1, 5.2.3, 9.2, 9.3, 9.8.2, 9.8.3, 9.9.1, 9.10.2, 9.10.3
Contractor's Superintendent
3.9, 10.2.6
Contractor's Supervision and Construction Procedures
1.2.2, 3.3, 3.4, 3.12.10, 4.2.2, 4.2.7, 6.1.3, 6.2.4, 7.1.3, 7.3.4, 7.3.6, 8.2, 10, 12, 14, 15.1.4
Coordination and Correlation
1.2, 3.2.1, 3.3.1, 3.10, 3.12.6, 6.1.3, 6.2.1
Copies Furnished of Drawings and Specifications
1.5, 2.3.6, 3.11
Copyrights
1.5, **3.17**
Correction of Work
2.5, 3.7.3, 9.4.2, 9.8.2, 9.8.3, 9.9.1, 12.1.2, **12.2**, 12.3, 15.1.3.1, 15.1.3.2, 15.2.1
Correlation and Intent of the Contract Documents
1.2
Cost, Definition of
7.3.4
Costs
2.5, 3.2.4, 3.7.3, 3.8.2, 3.15.2, 5.4.2, 6.1.1, 6.2.3, 7.3.3.3, 7.3.4, 7.3.8, 7.3.9, 9.10.2, 10.3.2, 10.3.6, 11.2, 12.1.2, 12.2.1, 12.2.4, 13.4, 14
Cutting and Patching
3.14, 6.2.5
Damage to Construction of Owner or Separate Contractors
3.14.2, 6.2.4, 10.2.1.2, 10.2.5, 10.4, 12.2.4
Damage to the Work
3.14.2, 9.9.1, 10.2.1.2, 10.2.5, 10.4, 12.2.4
Damages, Claims for
3.2.4, 3.18, 6.1.1, 8.3.3, 9.5.1, 9.6.7, 10.3.3, 11.3.2, 11.3, 14.2.4, 15.1.7
Damages for Delay
6.2.3, 8.3.3, 9.5.1.6, 9.7, 10.3.2, 14.3.2
Date of Commencement of the Work, Definition of
8.1.2
Date of Substantial Completion, Definition of
8.1.3
Day, Definition of
8.1.4
Decisions of the Architect
3.7.4, 4.2.6, 4.2.7, 4.2.11, 4.2.12, 4.2.13, 6.3, 7.3.4, 7.3.9, 8.1.3, 8.3.1, 9.2, 9.4, 9.5.1, 9.8.4, 9.9.1, 13.4.2, 14.2.2, 14.2.4, 15.1, 15.2
Decisions to Withhold Certification
9.4.1, **9.5**, 9.7, 14.1.1.3
Defective or Nonconforming Work, Acceptance, Rejection and Correction of
2.5, 3.5, 4.2.6, 6.2.3, 9.5.1, 9.5.3, 9.6.6, 9.8.2, 9.9.3, 9.10.4, 12.2.1
Definitions
1.1, 2.1.1, 3.1.1, 3.5, 3.12.1, 3.12.2, 3.12.3, 4.1.1, 5.1, 6.1.2, 7.2.1, 7.3.1, 8.1, 9.1, 9.8.1, 15.1.1
Delays and Extensions of Time
3.2, **3.7.4**, 5.2.3, 7.2.1, 7.3.1, **7.4**, **8.3**, 9.5.1, **9.7**, 10.3.2, **10.4**, 14.3.2, **15.1.6**, 15.2.5
Digital Data Use and Transmission
1.7
Disputes
6.3, 7.3.9, 15.1, 15.2
Documents and Samples at the Site
3.11
Drawings, Definition of
1.1.5
Drawings and Specifications, Use and Ownership of
3.11
Effective Date of Insurance
8.2.2
Emergencies
10.4, 14.1.1.2, **15.1.5**
Employees, Contractor's
3.3.2, 3.4.3, 3.8.1, 3.9, 3.18.2, 4.2.3, 4.2.6, 10.2, 10.3.3, 11.3, 14.1, 14.2.1.1
Equipment, Labor, or Materials
1.1.3, 1.1.6, 3.4, 3.5, 3.8.2, 3.8.3, 3.12, 3.13, 3.15.1, 4.2.6, 4.2.7, 5.2.1, 6.2.1, 7.3.4, 9.3.2, 9.3.3, 9.5.1.3, 9.10.2, 10.2.1, 10.2.4, 14.2.1.1, 14.2.1.2
Execution and Progress of the Work
1.1.3, 1.2.1, 1.2.2, 2.3.4, 2.3.6, 3.1, 3.3.1, 3.4.1, 3.7.1, 3.10.1, 3.12, 3.14, 4.2, 6.2.2, 7.1.3, 7.3.6, 8.2, 9.5.1, 9.9.1, 10.2, 10.3, 12.1, 12.2, 14.2, 14.3.1, 15.1.4

AIA Document A201® – 2017. Copyright © 1911, 1915, 1918, 1925, 1937, 1951, 1958, 1961, 1963, 1966, 1970, 1976, 1987, 1997, 2007 and 2017 by The American Institute of Architects. All rights reserved. The "American Institute of Architects," "AIA," the AIA Logo, "A201," and "AIA Contract Documents" are registered trademarks and may not be used without permission. This document was produced by AIA software at 11:45:22 ET on 02/16/2021 under Order No.6324187910 which expires on 02/16/2022, is not for resale, is licensed for one-time use only, and may only be used in accordance with the AIA Contract Documents® Terms of Service. To report copyright violations, e-mail copyright@aia.org.
User Notes: (1697986356)

Extensions of Time
3.2.4, 3.7.4, 5.2.3, 7.2.1, 7.3, 7.4, 9.5.1, 9.7, 10.3.2, 10.4, 14.3, 15.1.6, **15.2.5**
Failure of Payment
9.5.1.3, **9.7**, 9.10.2, 13.5, 14.1.1.3, 14.2.1.2
Faulty Work
(See Defective or Nonconforming Work)
Final Completion and Final Payment
4.2.1, 4.2.9, 9.8.2, **9.10**, 12.3, 14.2.4, 14.4.3
Financial Arrangements, Owner's
2.2.1, 13.2.2, 14.1.1.4
GENERAL PROVISIONS
1
Governing Law
13.1
Guarantees (See Warranty)
Hazardous Materials and Substances
10.2.4, **10.3**
Identification of Subcontractors and Suppliers
5.2.1
Indemnification
3.17, **3.18**, 9.6.8, 9.10.2, 10.3.3, 11.3
Information and Services Required of the Owner
2.1.2, **2.2**, 2.3, 3.2.2, 3.12.10.1, 6.1.3, 6.1.4, 6.2.5, 9.6.1, 9.9.2, 9.10.3, 10.3.3, 11.2, 13.4.1, 13.4.2, 14.1.1.4, 14.1.4, 15.1.4
Initial Decision
15.2
Initial Decision Maker, Definition of
1.1.8
Initial Decision Maker, Decisions
14.2.4, 15.1.4.2, 15.2.1, 15.2.2, 15.2.3, 15.2.4, 15.2.5
Initial Decision Maker, Extent of Authority
14.2.4, 15.1.4.2, 15.2.1, 15.2.2, 15.2.3, 15.2.4, 15.2.5
Injury or Damage to Person or Property
10.2.8, 10.4
Inspections
3.1.3, 3.3.3, 3.7.1, 4.2.2, 4.2.6, 4.2.9, 9.4.2, 9.8.3, 9.9.2, 9.10.1, 12.2.1, 13.4
Instructions to Bidders
1.1.1
Instructions to the Contractor
3.2.4, 3.3.1, 3.8.1, 5.2.1, 7, 8.2.2, 12, 13.4.2
Instruments of Service, Definition of
1.1.7
Insurance
6.1.1, 7.3.4, 8.2.2, 9.3.2, 9.8.4, 9.9.1, 9.10.2, 10.2.5, **11**
Insurance, Notice of Cancellation or Expiration
11.1.4, 11.2.3
Insurance, Contractor's Liability
11.1
Insurance, Effective Date of
8.2.2, 14.4.2
Insurance, Owner's Liability
11.2
Insurance, Property
10.2.5, 11.2, 11.4, 11.5
Insurance, Stored Materials
9.3.2
INSURANCE AND BONDS
11
Insurance Companies, Consent to Partial Occupancy
9.9.1
Insured loss, Adjustment and Settlement of
11.5
Intent of the Contract Documents
1.2.1, 4.2.7, 4.2.12, 4.2.13
Interest
13.5
Interpretation
1.1.8, 1.2.3, **1.4**, 4.1.1, 5.1, 6.1.2, 15.1.1
Interpretations, Written
4.2.11, 4.2.12
Judgment on Final Award
15.4.2
Labor and Materials, Equipment
1.1.3, 1.1.6, **3.4**, 3.5, 3.8.2, 3.8.3, 3.12, 3.13, 3.15.1, 5.2.1, 6.2.1, 7.3.4, 9.3.2, 9.3.3, 9.5.1.3, 9.10.2, 10.2.1, 10.2.4, 14.2.1.1, 14.2.1.2
Labor Disputes
8.3.1
Laws and Regulations
1.5, 2.3.2, 3.2.3, 3.2.4, 3.6, 3.7, 3.12.10, 3.13, 9.6.4, 9.9.1, 10.2.2, 13.1, 13.3.1, 13.4.2, 13.5, 14, 15.2.8, 15.4
Liens
2.1.2, 9.3.1, 9.3.3, 9.6.8, 9.10.2, 9.10.4, 15.2.8
Limitations, Statutes of
12.2.5, 15.1.2, 15.4.1.1
Limitations of Liability
3.2.2, 3.5, 3.12.10, 3.12.10.1, 3.17, 3.18.1, 4.2.6, 4.2.7, 6.2.2, 9.4.2, 9.6.4, 9.6.7, 9.6.8, 10.2.5, 10.3.3, 11.3, 12.2.5, 13.3.1
Limitations of Time
2.1.2, 2.2, 2.5, 3.2.2, 3.10, 3.11, 3.12.5, 3.15.1, 4.2.7, 5.2, 5.3, 5.4.1, 6.2.4, 7.3, 7.4, 8.2, 9.2, 9.3.1, 9.3.3, 9.4.1, 9.5, 9.6, 9.7, 9.8, 9.9, 9.10, 12.2, 13.4, 14, 15, 15.1.2, 15.1.3, 15.1.5
Materials, Hazardous
10.2.4, **10.3**
Materials, Labor, Equipment and
1.1.3, 1.1.6, 3.4.1, 3.5, 3.8.2, 3.8.3, 3.12, 3.13, 3.15.1, 5.2.1, 6.2.1, 7.3.4, 9.3.2, 9.3.3, 9.5.1.3, 9.10.2, 10.2.1.2, 10.2.4, 14.2.1.1, 14.2.1.2
Means, Methods, Techniques, Sequences and Procedures of Construction
3.3.1, 3.12.10, 4.2.2, 4.2.7, 9.4.2
Mechanic's Lien
2.1.2, 9.3.1, 9.3.3, 9.6.8, 9.10.2, 9.10.4, 15.2.8
Mediation
8.3.1, 15.1.3.2, 15.2.1, 15.2.5, 15.2.6, **15.3**, 15.4.1, 15.4.1.1
Minor Changes in the Work
1.1.1, 3.4.2, 3.12.8, 4.2.8, 7.1, **7.4**

AIA Document A201® – 2017. Copyright © 1911, 1915, 1918, 1925, 1937, 1951, 1958, 1961, 1963, 1966, 1970, 1976, 1987, 1997, 2007 and 2017 by The American Institute of Architects. All rights reserved. The "American Institute of Architects," "AIA," the AIA Logo, "A201," and "AIA Contract Documents" are registered trademarks and may not be used without permission. This document was produced by AIA software at 11:45:22 ET on 02/16/2021 under Order No.6324187910 which expires on 02/16/2022, is not for resale, is licensed for one-time use only, and may only be used in accordance with the AIA Contract Documents® Terms of Service. To report copyright violations, e-mail copyright@aia.org.
User Notes: (1697986356)

MISCELLANEOUS PROVISIONS
13
Modifications, Definition of
1.1.1
Modifications to the Contract
1.1.1, 1.1.2, 2.5, 3.11, 4.1.2, 4.2.1, 5.2.3, 7, 8.3.1, 9.7, 10.3.2
Mutual Responsibility
6.2
Nonconforming Work, Acceptance of
9.6.6, 9.9.3, **12.3**
Nonconforming Work, Rejection and Correction of
2.4, 2.5, 3.5, 4.2.6, 6.2.4, 9.5.1, 9.8.2, 9.9.3, 9.10.4, 12.2
Notice
1.6, 1.6.1, 1.6.2, 2.1.2, 2.2.2., 2.2.3, 2.2.4, 2.5, 3.2.4, 3.3.1, 3.7.4, 3.7.5, 3.9.2, 3.12.9, 3.12.10, 5.2.1, 7.4, 8.2.2 9.6.8, 9.7, 9.10.1, 10.2.8, 10.3.2, 11.5, 12.2.2.1, 13.4.1, 13.4.2, 14.1, 14.2.2, 14.4.2, 15.1.3, 15.1.5, 15.1.6, 15.4.1
Notice of Cancellation or Expiration of Insurance
11.1.4, 11.2.3
Notice of Claims
1.6.2, 2.1.2, 3.7.4, 9.6.8, 10.2.8, **15.1.3**, 15.1.5, 15.1.6, 15.2.8, 15.3.2, 15.4.1
Notice of Testing and Inspections
13.4.1, 13.4.2
Observations, Contractor's
3.2, 3.7.4
Occupancy
2.3.1, 9.6.6, 9.8
Orders, Written
1.1.1, 2.4, 3.9.2, 7, 8.2.2, 11.5, 12.1, 12.2.2.1, 13.4.2, 14.3.1
OWNER
2
Owner, Definition of
2.1.1
Owner, Evidence of Financial Arrangements
2.2, 13.2.2, 14.1.1.4
Owner, Information and Services Required of the
2.1.2, **2.2**, 2.3, 3.2.2, 3.12.10, 6.1.3, 6.1.4, 6.2.5, 9.3.2, 9.6.1, 9.6.4, 9.9.2, 9.10.3, 10.3.3, 11.2, 13.4.1, 13.4.2, 14.1.1.4, 14.1.4, 15.1.4
Owner's Authority
1.5, 2.1.1, 2.3.32.4, 2.5, 3.4.2, 3.8.1, 3.12.10, 3.14.2, 4.1.2, 4.2.4, 4.2.9, 5.2.1, 5.2.4, 5.4.1, 6.1, 6.3, 7.2.1, 7.3.1, 8.2.2, 8.3.1, 9.3.2, 9.5.1, 9.6.4, 9.9.1, 9.10.2, 10.3.2, 11.4, 11.5, 12.2.2, 12.3, 13.2.2, 14.3, 14.4, 15.2.7
Owner's Insurance
11.2
Owner's Relationship with Subcontractors
1.1.2, 5.2, 5.3, 5.4, 9.6.4, 9.10.2, 14.2.2
Owner's Right to Carry Out the Work
2.5, 14.2.2
Owner's Right to Clean Up
6.3
Owner's Right to Perform Construction and to Award Separate Contracts
6.1
Owner's Right to Stop the Work
2.4
Owner's Right to Suspend the Work
14.3
Owner's Right to Terminate the Contract
14.2, 14.4
Ownership and Use of Drawings, Specifications and Other Instruments of Service
1.1.1, 1.1.6, 1.1.7, **1.5**, 2.3.6, 3.2.2, 3.11, 3.17, 4.2.12, 5.3
Partial Occupancy or Use
9.6.6, **9.9**
Patching, Cutting and
3.14, 6.2.5
Patents
3.17
Payment, Applications for
4.2.5, 7.3.9, 9.2, **9.3**, 9.4, 9.5, 9.6.3, 9.7, 9.8.5, 9.10.1, 14.2.3, 14.2.4, 14.4.3
Payment, Certificates for
4.2.5, 4.2.9, 9.3.3, **9.4**, 9.5, 9.6.1, 9.6.6, 9.7, 9.10.1, 9.10.3, 14.1.1.3, 14.2.4
Payment, Failure of
9.5.1.3, **9.7**, 9.10.2, 13.5, 14.1.1.3, 14.2.1.2
Payment, Final
4.2.1, 4.2.9, **9.10**, 12.3, 14.2.4, 14.4.3
Payment Bond, Performance Bond and
7.3.4.4, 9.6.7, 9.10.3, **11.1.2**
Payments, Progress
9.3, **9.6**, 9.8.5, 9.10.3, 14.2.3, 15.1.4
PAYMENTS AND COMPLETION
9
Payments to Subcontractors
5.4.2, 9.5.1.3, 9.6.2, 9.6.3, 9.6.4, 9.6.7, 14.2.1.2
PCB
10.3.1
Performance Bond and Payment Bond
7.3.4.4, 9.6.7, 9.10.3, **11.1.2**
Permits, Fees, Notices and Compliance with Laws
2.3.1, **3.7**, 3.13, 7.3.4.4, 10.2.2
PERSONS AND PROPERTY, PROTECTION OF
10
Polychlorinated Biphenyl
10.3.1
Product Data, Definition of
3.12.2
Product Data and Samples, Shop Drawings
3.11, **3.12**, 4.2.7
Progress and Completion
4.2.2, **8.2**, 9.8, 9.9.1, 14.1.4, 15.1.4
Progress Payments
9.3, **9.6**, 9.8.5, 9.10.3, 14.2.3, 15.1.4

AIA Document A201® – 2017. Copyright © 1911, 1915, 1918, 1925, 1937, 1951, 1958, 1961, 1963, 1966, 1970, 1976, 1987, 1997, 2007 and 2017 by The American Institute of Architects. All rights reserved. The "American Institute of Architects," "AIA," the AIA Logo, "A201," and "AIA Contract Documents" are registered trademarks and may not be used without permission. This document was produced by AIA software at 11:45:22 ET on 02/16/2021 under Order No.6324187910 which expires on 02/16/2022, is not for resale, is licensed for one-time use only, and may only be used in accordance with the AIA Contract Documents® Terms of Service. To report copyright violations, e-mail copyright@aia.org.
User Notes: (1697986356)

Project, Definition of
1.1.4
Project Representatives
4.2.10
Property Insurance
10.2.5, **11.2**
Proposal Requirements
1.1.1
PROTECTION OF PERSONS AND PROPERTY
10
Regulations and Laws
1.5, 2.3.2, 3.2.3, 3.6, 3.7, 3.12.10, 3.13, 9.6.4, 9.9.1, 10.2.2, 13.1, 13.3, 13.4.1, 13.4.2, 13.5, 14, 15.2.8, 15.4
Rejection of Work
4.2.6, 12.2.1
Releases and Waivers of Liens
9.3.1, 9.10.2
Representations
3.2.1, 3.5, 3.12.6, 8.2.1, 9.3.3, 9.4.2, 9.5.1, 9.10.1
Representatives
2.1.1, 3.1.1, 3.9, 4.1.1, 4.2.10, 13.2.1
Responsibility for Those Performing the Work
3.3.2, 3.18, 4.2.2, 4.2.3, 5.3, 6.1.3, 6.2, 6.3, 9.5.1, 10
Retainage
9.3.1, 9.6.2, 9.8.5, 9.9.1, 9.10.2, 9.10.3
Review of Contract Documents and Field Conditions by Contractor
3.2, 3.12.7, 6.1.3
Review of Contractor's Submittals by Owner and Architect
3.10.1, 3.10.2, 3.11, 3.12, 4.2, 5.2, 6.1.3, 9.2, 9.8.2
Review of Shop Drawings, Product Data and Samples by Contractor
3.12
Rights and Remedies
1.1.2, 2.4, 2.5, 3.5, 3.7.4, 3.15.2, 4.2.6, 5.3, 5.4, 6.1, 6.3, 7.3.1, 8.3, 9.5.1, 9.7, 10.2.5, 10.3, 12.2.1, 12.2.2, 12.2.4, **13.3**, 14, 15.4
Royalties, Patents and Copyrights
3.17
Rules and Notices for Arbitration
15.4.1
Safety of Persons and Property
10.2, 10.4
Safety Precautions and Programs
3.3.1, 4.2.2, 4.2.7, 5.3, **10.1**, 10.2, 10.4
Samples, Definition of
3.12.3
Samples, Shop Drawings, Product Data and
3.11, **3.12**, 4.2.7
Samples at the Site, Documents and
3.11
Schedule of Values
9.2, 9.3.1
Schedules, Construction
3.10, 3.12.1, 3.12.2, 6.1.3, 15.1.6.2
Separate Contracts and Contractors
1.1.4, 3.12.5, 3.14.2, 4.2.4, 4.2.7, 6, 8.3.1, 12.1.2
Separate Contractors, Definition of
6.1.1
Shop Drawings, Definition of
3.12.1
Shop Drawings, Product Data and Samples
3.11, **3.12**, 4.2.7
Site, Use of
3.13, 6.1.1, 6.2.1
Site Inspections
3.2.2, 3.3.3, 3.7.1, 3.7.4, 4.2, 9.9.2, 9.4.2, 9.10.1, 13.4
Site Visits, Architect's
3.7.4, 4.2.2, 4.2.9, 9.4.2, 9.5.1, 9.9.2, 9.10.1, 13.4
Special Inspections and Testing
4.2.6, 12.2.1, 13.4
Specifications, Definition of
1.1.6
Specifications
1.1.1, **1.1.6**, 1.2.2, 1.5, 3.12.10, 3.17, 4.2.14
Statute of Limitations
15.1.2, 15.4.1.1
Stopping the Work
2.2.2, 2.4, 9.7, 10.3, 14.1
Stored Materials
6.2.1, 9.3.2, 10.2.1.2, 10.2.4
Subcontractor, Definition of
5.1.1
SUBCONTRACTORS
5
Subcontractors, Work by
1.2.2, 3.3.2, 3.12.1, 3.18, 4.2.3, 5.2.3, 5.3, 5.4, 9.3.1.2, 9.6.7
Subcontractual Relations
5.3, 5.4, 9.3.1.2, 9.6, 9.10, 10.2.1, 14.1, 14.2.1
Submittals
3.10, 3.11, 3.12, 4.2.7, 5.2.1, 5.2.3, 7.3.4, 9.2, 9.3, 9.8, 9.9.1, 9.10.2, 9.10.3
Submittal Schedule
3.10.2, 3.12.5, 4.2.7
Subrogation, Waivers of
6.1.1, **11.3**
Substances, Hazardous
10.3
Substantial Completion
4.2.9, 8.1.1, 8.1.3, 8.2.3, 9.4.2, **9.8**, 9.9.1, 9.10.3, 12.2, 15.1.2
Substantial Completion, Definition of
9.8.1
Substitution of Subcontractors
5.2.3, 5.2.4
Substitution of Architect
2.3.3
Substitutions of Materials
3.4.2, 3.5, 7.3.8
Sub-subcontractor, Definition of
5.1.2

AIA Document A201® – 2017. Copyright © 1911, 1915, 1918, 1925, 1937, 1951, 1958, 1961, 1963, 1966, 1970, 1976, 1987, 1997, 2007 and 2017 by The American Institute of Architects. All rights reserved. The "American Institute of Architects," "AIA," the AIA Logo, "A201," and "AIA Contract Documents" are registered trademarks and may not be used without permission. This document was produced by AIA software at 11:45:22 ET on 02/16/2021 under Order No.6324187910 which expires on 02/16/2022, is not for resale, is licensed for one-time use only, and may only be used in accordance with the AIA Contract Documents® Terms of Service. To report copyright violations, e-mail copyright@aia.org.
User Notes: (1697986356)

Subsurface Conditions
3.7.4
Successors and Assigns
13.2
Superintendent
3.9, 10.2.6
Supervision and Construction Procedures
1.2.2, **3.3**, 3.4, 3.12.10, 4.2.2, 4.2.7, 6.1.3, 6.2.4, 7.1.3, 7.3.4, 8.2, 8.3.1, 9.4.2, 10, 12, 14, 15.1.4
Suppliers
1.5, 3.12.1, 4.2.4, 4.2.6, 5.2.1, 9.3, 9.4.2, 9.5.4, 9.6, 9.10.5, 14.2.1
Surety
5.4.1.2, 9.6.8, 9.8.5, 9.10.2, 9.10.3, 11.1.2, 14.2.2, 15.2.7
Surety, Consent of
9.8.5, 9.10.2, 9.10.3
Surveys
1.1.7, 2.3.4
Suspension by the Owner for Convenience
14.3
Suspension of the Work
3.7.5, 5.4.2, 14.3
Suspension or Termination of the Contract
5.4.1.1, 14
Taxes
3.6, 3.8.2.1, 7.3.4.4
Termination by the Contractor
14.1, 15.1.7
Termination by the Owner for Cause
5.4.1.1, **14.2**, 15.1.7
Termination by the Owner for Convenience
14.4
Termination of the Architect
2.3.3
Termination of the Contractor Employment
14.2.2

TERMINATION OR SUSPENSION OF THE CONTRACT
14
Tests and Inspections
3.1.3, 3.3.3, 3.7.1, 4.2.2, 4.2.6, 4.2.9, 9.4.2, 9.8.3, 9.9.2, 9.10.1, 10.3.2, 12.2.1, **13.4**
TIME
8
Time, Delays and Extensions of
3.2.4, 3.7.4, 5.2.3, 7.2.1, 7.3.1, 7.4, **8.3**, 9.5.1, 9.7, 10.3.2, 10.4, 14.3.2, 15.1.6, 15.2.5
Time Limits
2.1.2, 2.2, 2.5, 3.2.2, 3.10, 3.11, 3.12.5, 3.15.1, 4.2, 5.2, 5.3, 5.4, 6.2.4, 7.3, 7.4, 8.2, 9.2, 9.3.1, 9.3.3, 9.4.1, 9.5, 9.6, 9.7, 9.8, 9.9, 9.10, 12.2, 13.4, 14, 15.1.2, 15.1.3, 15.4
Time Limits on Claims
3.7.4, 10.2.8, 15.1.2, 15.1.3
Title to Work
9.3.2, 9.3.3
UNCOVERING AND CORRECTION OF WORK
12
Uncovering of Work
12.1
Unforeseen Conditions, Concealed or Unknown
3.7.4, 8.3.1, 10.3
Unit Prices
7.3.3.2, 9.1.2
Use of Documents
1.1.1, 1.5, 2.3.6, 3.12.6, 5.3
Use of Site
3.13, 6.1.1, 6.2.1
Values, Schedule of
9.2, 9.3.1
Waiver of Claims by the Architect
13.3.2
Waiver of Claims by the Contractor
9.10.5, 13.3.2, **15.1.7**
Waiver of Claims by the Owner
9.9.3, 9.10.3, 9.10.4, 12.2.2.1, 13.3.2, 14.2.4, **15.1.7**
Waiver of Consequential Damages
14.2.4, 15.1.7
Waiver of Liens
9.3, 9.10.2, 9.10.4
Waivers of Subrogation
6.1.1, **11.3**
Warranty
3.5, 4.2.9, 9.3.3, 9.8.4, 9.9.1, 9.10.2, 9.10.4, 12.2.2, 15.1.2
Weather Delays
8.3, 15.1.6.2
Work, Definition of
1.1.3
Written Consent
1.5.2, 3.4.2, 3.7.4, 3.12.8, 3.14.2, 4.1.2, 9.3.2, 9.10.3, 13.2, 13.3.2, 15.4.4.2
Written Interpretations
4.2.11, 4.2.12
Written Orders
1.1.1, 2.4, 3.9, 7, 8.2.2, 12.1, 12.2, 13.4.2, 14.3.1

AIA Document A201® – 2017. Copyright © 1911, 1915, 1918, 1925, 1937, 1951, 1958, 1961, 1963, 1966, 1970, 1976, 1987, 1997, 2007 and 2017 by The American Institute of Architects. All rights reserved. The "American Institute of Architects," "AIA," the AIA Logo, "A201," and "AIA Contract Documents" are registered trademarks and may not be used without permission. This document was produced by AIA software at 11:45:22 ET on 02/16/2021 under Order No.6324187910 which expires on 02/16/2022, is not for resale, is licensed for one-time use only, and may only be used in accordance with the AIA Contract Documents® Terms of Service. To report copyright violations, e-mail copyright@aia.org.
User Notes: (1697986356)

ARTICLE 1 GENERAL PROVISIONS

§ 1.1 Basic Definitions

§ 1.1.1 The Contract Documents

The Contract Documents are enumerated in the Agreement between the Owner and Contractor (hereinafter the Agreement) and consist of the Agreement, Conditions of the Contract (General, Supplementary and other Conditions), Drawings, Specifications, Addenda issued prior to execution of the Contract, other documents listed in the Agreement, and Modifications issued after execution of the Contract. A Modification is (1) a written amendment to the Contract signed by both parties, (2) a Change Order, (3) a Construction Change Directive, or (4) a written order for a minor change in the Work issued by the Architect. Unless specifically enumerated in the Agreement, the Contract Documents do not include the advertisement or invitation to bid, Instructions to Bidders, sample forms, other information furnished by the Owner in anticipation of receiving bids or proposals, the Contractor's bid or proposal, or portions of Addenda relating to bidding or proposal requirements.

§ 1.1.2 The Contract

The Contract Documents form the Contract for Construction. The Contract represents the entire and integrated agreement between the parties hereto and supersedes prior negotiations, representations, or agreements, either written or oral. The Contract may be amended or modified only by a Modification. The Contract Documents shall not be construed to create a contractual relationship of any kind (1) between the Contractor and the Architect or the Architect's consultants, (2) between the Owner and a Subcontractor or a Sub-subcontractor, (3) between the Owner and the Architect or the Architect's consultants, or (4) between any persons or entities other than the Owner and the Contractor. The Architect shall, however, be entitled to performance and enforcement of obligations under the Contract intended to facilitate performance of the Architect's duties.

§ 1.1.3 The Work

The term "Work" means the construction and services required by the Contract Documents, whether completed or partially completed, and includes all other labor, materials, equipment, and services provided or to be provided by the Contractor to fulfill the Contractor's obligations. The Work may constitute the whole or a part of the Project.

§ 1.1.4 The Project

The Project is the total construction of which the Work performed under the Contract Documents may be the whole or a part and which may include construction by the Owner and by Separate Contractors.

§ 1.1.5 The Drawings

The Drawings are the graphic and pictorial portions of the Contract Documents showing the design, location and dimensions of the Work, generally including plans, elevations, sections, details, schedules, and diagrams.

§ 1.1.6 The Specifications

The Specifications are that portion of the Contract Documents consisting of the written requirements for materials, equipment, systems, standards and workmanship for the Work, and performance of related services.

§ 1.1.7 Instruments of Service

Instruments of Service are representations, in any medium of expression now known or later developed, of the tangible and intangible creative work performed by the Architect and the Architect's consultants under their respective professional services agreements. Instruments of Service may include, without limitation, studies, surveys, models, sketches, drawings, specifications, and other similar materials.

§ 1.1.8 Initial Decision Maker

The Initial Decision Maker is the person identified in the Agreement to render initial decisions on Claims in accordance with Section 15.2. The Initial Decision Maker shall not show partiality to the Owner or Contractor and shall not be liable for results of interpretations or decisions rendered in good faith.

§ 1.2 Correlation and Intent of the Contract Documents

§ 1.2.1 The intent of the Contract Documents is to include all items necessary for the proper execution and completion of the Work by the Contractor. The Contract Documents are complementary, and what is required by one shall be as binding as if required by all; performance by the Contractor shall be required only to the extent consistent with the Contract Documents and reasonably inferable from them as being necessary to produce the indicated results.

Init.
/

AIA Document A201® – 2017. Copyright © 1911, 1915, 1918, 1925, 1937, 1951, 1958, 1961, 1963, 1966, 1970, 1976, 1987, 1997, 2007 and 2017 by The American Institute of Architects. All rights reserved. The "American Institute of Architects," "AIA," the AIA Logo, "A201," and "AIA Contract Documents" are registered trademarks and may not be used without permission. This document was produced by AIA software at 11:45:22 ET on 02/16/2021 under Order No.6324187910 which expires on 02/16/2022, is not for resale, is licensed for one-time use only, and may only be used in accordance with the AIA Contract Documents® Terms of Service. To report copyright violations, e-mail copyright@aia.org.
User Notes:
(1697986356)

§ 1.2.1.1 The invalidity of any provision of the Contract Documents shall not invalidate the Contract or its remaining provisions. If it is determined that any provision of the Contract Documents violates any law, or is otherwise invalid or unenforceable, then that provision shall be revised to the extent necessary to make that provision legal and enforceable. In such case the Contract Documents shall be construed, to the fullest extent permitted by law, to give effect to the parties' intentions and purposes in executing the Contract.

§ 1.2.2 Organization of the Specifications into divisions, sections and articles, and arrangement of Drawings shall not control the Contractor in dividing the Work among Subcontractors or in establishing the extent of Work to be performed by any trade.

§ 1.2.3 Unless otherwise stated in the Contract Documents, words that have well-known technical or construction industry meanings are used in the Contract Documents in accordance with such recognized meanings.

§ 1.3 Capitalization

Terms capitalized in these General Conditions include those that are (1) specifically defined, (2) the titles of numbered articles, or (3) the titles of other documents published by the American Institute of Architects.

§ 1.4 Interpretation

In the interest of brevity the Contract Documents frequently omit modifying words such as "all" and "any" and articles such as "the" and "an," but the fact that a modifier or an article is absent from one statement and appears in another is not intended to affect the interpretation of either statement.

§ 1.5 Ownership and Use of Drawings, Specifications, and Other Instruments of Service

§ 1.5.1 The Architect and the Architect's consultants shall be deemed the authors and owners of their respective Instruments of Service, including the Drawings and Specifications, and retain all common law, statutory, and other reserved rights in their Instruments of Service, including copyrights. The Contractor, Subcontractors, Sub-subcontractors, and suppliers shall not own or claim a copyright in the Instruments of Service. Submittal or distribution to meet official regulatory requirements or for other purposes in connection with the Project is not to be construed as publication in derogation of the Architect's or Architect's consultants' reserved rights.

§ 1.5.2 The Contractor, Subcontractors, Sub-subcontractors, and suppliers are authorized to use and reproduce the Instruments of Service provided to them, subject to any protocols established pursuant to Sections 1.7 and 1.8, solely and exclusively for execution of the Work. All copies made under this authorization shall bear the copyright notice, if any, shown on the Instruments of Service. The Contractor, Subcontractors, Sub-subcontractors, and suppliers may not use the Instruments of Service on other projects or for additions to the Project outside the scope of the Work without the specific written consent of the Owner, Architect, and the Architect's consultants.

§ 1.6 Notice

§ 1.6.1 Except as otherwise provided in Section 1.6.2, where the Contract Documents require one party to notify or give notice to the other party, such notice shall be provided in writing to the designated representative of the party to whom the notice is addressed and shall be deemed to have been duly served if delivered in person, by mail, by courier, or by electronic transmission if a method for electronic transmission is set forth in the Agreement.

§ 1.6.2 Notice of Claims as provided in Section 15.1.3 shall be provided in writing and shall be deemed to have been duly served only if delivered to the designated representative of the party to whom the notice is addressed by certified or registered mail, or by courier providing proof of delivery.

§ 1.7 Digital Data Use and Transmission

The parties shall agree upon protocols governing the transmission and use of Instruments of Service or any other information or documentation in digital form. The parties will use AIA Document E203™–2013, Building Information Modeling and Digital Data Exhibit, to establish the protocols for the development, use, transmission, and exchange of digital data.

§ 1.8 Building Information Models Use and Reliance

Any use of, or reliance on, all or a portion of a building information model without agreement to protocols governing the use of, and reliance on, the information contained in the model and without having those protocols set forth in AIA Document E203™–2013, Building Information Modeling and Digital Data Exhibit, and the requisite AIA Document

Init.
/

AIA Document A201® – 2017. Copyright © 1911, 1915, 1918, 1925, 1937, 1951, 1958, 1961, 1963, 1966, 1970, 1976, 1987, 1997, 2007 and 2017 by The American Institute of Architects. All rights reserved. The "American Institute of Architects," "AIA," the AIA Logo, "A201," and "AIA Contract Documents" are registered trademarks and may not be used without permission. This document was produced by AIA software at 11:45:22 ET on 02/16/2021 under Order No.6324187910 which expires on 02/16/2022, is not for resale, is licensed for one-time use only, and may only be used in accordance with the AIA Contract Documents® Terms of Service. To report copyright violations, e-mail copyright@aia.org.
User Notes: (1697986356)

G202™–2013, Project Building Information Modeling Protocol Form, shall be at the using or relying party's sole risk and without liability to the other party and its contractors or consultants, the authors of, or contributors to, the building information model, and each of their agents and employees.

ARTICLE 2 OWNER

§ 2.1 General

§ 2.1.1 The Owner is the person or entity identified as such in the Agreement and is referred to throughout the Contract Documents as if singular in number. The Owner shall designate in writing a representative who shall have express authority to bind the Owner with respect to all matters requiring the Owner's approval or authorization. Except as otherwise provided in Section 4.2.1, the Architect does not have such authority. The term "Owner" means the Owner or the Owner's authorized representative.

§ 2.1.2 The Owner shall furnish to the Contractor, within fifteen days after receipt of a written request, information necessary and relevant for the Contractor to evaluate, give notice of, or enforce mechanic's lien rights. Such information shall include a correct statement of the record legal title to the property on which the Project is located, usually referred to as the site, and the Owner's interest therein.

§ 2.2 Evidence of the Owner's Financial Arrangements

§ 2.2.1 Prior to commencement of the Work and upon written request by the Contractor, the Owner shall furnish to the Contractor reasonable evidence that the Owner has made financial arrangements to fulfill the Owner's obligations under the Contract. The Contractor shall have no obligation to commence the Work until the Owner provides such evidence. If commencement of the Work is delayed under this Section 2.2.1, the Contract Time shall be extended appropriately.

§ 2.2.2 Following commencement of the Work and upon written request by the Contractor, the Owner shall furnish to the Contractor reasonable evidence that the Owner has made financial arrangements to fulfill the Owner's obligations under the Contract only if (1) the Owner fails to make payments to the Contractor as the Contract Documents require; (2) the Contractor identifies in writing a reasonable concern regarding the Owner's ability to make payment when due; or (3) a change in the Work materially changes the Contract Sum. If the Owner fails to provide such evidence, as required, within fourteen days of the Contractor's request, the Contractor may immediately stop the Work and, in that event, shall notify the Owner that the Work has stopped. However, if the request is made because a change in the Work materially changes the Contract Sum under (3) above, the Contractor may immediately stop only that portion of the Work affected by the change until reasonable evidence is provided. If the Work is stopped under this Section 2.2.2, the Contract Time shall be extended appropriately and the Contract Sum shall be increased by the amount of the Contractor's reasonable costs of shutdown, delay and start-up, plus interest as provided in the Contract Documents.

§ 2.2.3 After the Owner furnishes evidence of financial arrangements under this Section 2.2, the Owner shall not materially vary such financial arrangements without prior notice to the Contractor.

§ 2.2.4 Where the Owner has designated information furnished under this Section 2.2 as "confidential," the Contractor shall keep the information confidential and shall not disclose it to any other person. However, the Contractor may disclose "confidential" information, after seven (7) days' notice to the Owner, where disclosure is required by law, including a subpoena or other form of compulsory legal process issued by a court or governmental entity, or by court or arbitrator(s) order. The Contractor may also disclose "confidential" information to its employees, consultants, sureties, Subcontractors and their employees, Sub-subcontractors, and others who need to know the content of such information solely and exclusively for the Project and who agree to maintain the confidentiality of such information.

§ 2.3 Information and Services Required of the Owner

§ 2.3.1 Except for permits and fees that are the responsibility of the Contractor under the Contract Documents, including those required under Section 3.7.1, the Owner shall secure and pay for necessary approvals, easements, assessments and charges required for construction, use or occupancy of permanent structures or for permanent changes in existing facilities.

§ 2.3.2 The Owner shall retain an architect lawfully licensed to practice architecture, or an entity lawfully practicing architecture, in the jurisdiction where the Project is located. That person or entity is identified as the Architect in the Agreement and is referred to throughout the Contract Documents as if singular in number.

Init.
/

AIA Document A201® – 2017. Copyright © 1911, 1915, 1918, 1925, 1937, 1951, 1958, 1961, 1963, 1966, 1970, 1976, 1987, 1997, 2007 and 2017 by The American Institute of Architects. All rights reserved. The "American Institute of Architects," "AIA," the AIA Logo, "A201," and "AIA Contract Documents" are registered trademarks and may not be used without permission. This document was produced by AIA software at 11:45:22 ET on 02/16/2021 under Order No.6324187910 which expires on 02/16/2022, is not for resale, is licensed for one-time use only, and may only be used in accordance with the AIA Contract Documents® Terms of Service. To report copyright violations, e-mail copyright@aia.org.
User Notes: (1697986356)

§ 2.3.3 If the employment of the Architect terminates, the Owner shall employ a successor to whom the Contractor has no reasonable objection and whose status under the Contract Documents shall be that of the Architect.

§ 2.3.4 The Owner shall furnish surveys describing physical characteristics, legal limitations and utility locations for the site of the Project, and a legal description of the site. The Contractor shall be entitled to rely on the accuracy of information furnished by the Owner but shall exercise proper precautions relating to the safe performance of the Work.

§ 2.3.5 The Owner shall furnish information or services required of the Owner by the Contract Documents with reasonable promptness. The Owner shall also furnish any other information or services under the Owner's control and relevant to the Contractor's performance of the Work with reasonable promptness after receiving the Contractor's written request for such information or services.

§ 2.3.6 Unless otherwise provided in the Contract Documents, the Owner shall furnish to the Contractor one copy of the Contract Documents for purposes of making reproductions pursuant to Section 1.5.2.

§ 2.4 Owner's Right to Stop the Work

If the Contractor fails to correct Work that is not in accordance with the requirements of the Contract Documents as required by Section 12.2 or repeatedly fails to carry out Work in accordance with the Contract Documents, the Owner may issue a written order to the Contractor to stop the Work, or any portion thereof, until the cause for such order has been eliminated; however, the right of the Owner to stop the Work shall not give rise to a duty on the part of the Owner to exercise this right for the benefit of the Contractor or any other person or entity, except to the extent required by Section 6.1.3.

§ 2.5 Owner's Right to Carry Out the Work

If the Contractor defaults or neglects to carry out the Work in accordance with the Contract Documents and fails within a ten-day period after receipt of notice from the Owner to commence and continue correction of such default or neglect with diligence and promptness, the Owner may, without prejudice to other remedies the Owner may have, correct such default or neglect. Such action by the Owner and amounts charged to the Contractor are both subject to prior approval of the Architect and the Architect may, pursuant to Section 9.5.1, withhold or nullify a Certificate for Payment in whole or in part, to the extent reasonably necessary to reimburse the Owner for the reasonable cost of correcting such deficiencies, including Owner's expenses and compensation for the Architect's additional services made necessary by such default, neglect, or failure. If current and future payments are not sufficient to cover such amounts, the Contractor shall pay the difference to the Owner. If the Contractor disagrees with the actions of the Owner or the Architect, or the amounts claimed as costs to the Owner, the Contractor may file a Claim pursuant to Article 15.

ARTICLE 3 CONTRACTOR

§ 3.1 General

§ 3.1.1 The Contractor is the person or entity identified as such in the Agreement and is referred to throughout the Contract Documents as if singular in number. The Contractor shall be lawfully licensed, if required in the jurisdiction where the Project is located. The Contractor shall designate in writing a representative who shall have express authority to bind the Contractor with respect to all matters under this Contract. The term "Contractor" means the Contractor or the Contractor's authorized representative.

§ 3.1.2 The Contractor shall perform the Work in accordance with the Contract Documents.

§ 3.1.3 The Contractor shall not be relieved of its obligations to perform the Work in accordance with the Contract Documents either by activities or duties of the Architect in the Architect's administration of the Contract, or by tests, inspections or approvals required or performed by persons or entities other than the Contractor.

§ 3.2 Review of Contract Documents and Field Conditions by Contractor

§ 3.2.1 Execution of the Contract by the Contractor is a representation that the Contractor has visited the site, become generally familiar with local conditions under which the Work is to be performed, and correlated personal observations with requirements of the Contract Documents.

Init.
/

AIA Document A201® – 2017. Copyright © 1911, 1915, 1918, 1925, 1937, 1951, 1958, 1961, 1963, 1966, 1970, 1976, 1987, 1997, 2007 and 2017 by The American Institute of Architects. All rights reserved. The "American Institute of Architects," "AIA," the AIA Logo, "A201," and "AIA Contract Documents" are registered trademarks and may not be used without permission. This document was produced by AIA software at 11:45:22 ET on 02/16/2021 under Order No.6324187910 which expires on 02/16/2022, is not for resale, is licensed for one-time use only, and may only be used in accordance with the AIA Contract Documents® Terms of Service. To report copyright violations, e-mail copyright@aia.org.
User Notes: (1697986356)

§ 3.2.2 Because the Contract Documents are complementary, the Contractor shall, before starting each portion of the Work, carefully study and compare the various Contract Documents relative to that portion of the Work, as well as the information furnished by the Owner pursuant to Section 2.3.4, shall take field measurements of any existing conditions related to that portion of the Work, and shall observe any conditions at the site affecting it. These obligations are for the purpose of facilitating coordination and construction by the Contractor and are not for the purpose of discovering errors, omissions, or inconsistencies in the Contract Documents; however, the Contractor shall promptly report to the Architect any errors, inconsistencies or omissions discovered by or made known to the Contractor as a request for information in such form as the Architect may require. It is recognized that the Contractor's review is made in the Contractor's capacity as a contractor and not as a licensed design professional, unless otherwise specifically provided in the Contract Documents.

§ 3.2.3 The Contractor is not required to ascertain that the Contract Documents are in accordance with applicable laws, statutes, ordinances, codes, rules and regulations, or lawful orders of public authorities, but the Contractor shall promptly report to the Architect any nonconformity discovered by or made known to the Contractor as a request for information in such form as the Architect may require.

§ 3.2.4 If the Contractor believes that additional cost or time is involved because of clarifications or instructions the Architect issues in response to the Contractor's notices or requests for information pursuant to Sections 3.2.2 or 3.2.3, the Contractor shall submit Claims as provided in Article 15. If the Contractor fails to perform the obligations of Sections 3.2.2 or 3.2.3, the Contractor shall pay such costs and damages to the Owner, subject to Section 15.1.7, as would have been avoided if the Contractor had performed such obligations. If the Contractor performs those obligations, the Contractor shall not be liable to the Owner or Architect for damages resulting from errors, inconsistencies or omissions in the Contract Documents, for differences between field measurements or conditions and the Contract Documents, or for nonconformities of the Contract Documents to applicable laws, statutes, ordinances, codes, rules and regulations, and lawful orders of public authorities.

§ 3.3 Supervision and Construction Procedures

§ 3.3.1 The Contractor shall supervise and direct the Work, using the Contractor's best skill and attention. The Contractor shall be solely responsible for, and have control over, construction means, methods, techniques, sequences, and procedures, and for coordinating all portions of the Work under the Contract. If the Contract Documents give specific instructions concerning construction means, methods, techniques, sequences, or procedures, the Contractor shall evaluate the jobsite safety thereof and shall be solely responsible for the jobsite safety of such means, methods, techniques, sequences, or procedures. If the Contractor determines that such means, methods, techniques, sequences or procedures may not be safe, the Contractor shall give timely notice to the Owner and Architect, and shall propose alternative means, methods, techniques, sequences, or procedures. The Architect shall evaluate the proposed alternative solely for conformance with the design intent for the completed construction. Unless the Architect objects to the Contractor's proposed alternative, the Contractor shall perform the Work using its alternative means, methods, techniques, sequences, or procedures.

§ 3.3.2 The Contractor shall be responsible to the Owner for acts and omissions of the Contractor's employees, Subcontractors and their agents and employees, and other persons or entities performing portions of the Work for, or on behalf of, the Contractor or any of its Subcontractors.

§ 3.3.3 The Contractor shall be responsible for inspection of portions of Work already performed to determine that such portions are in proper condition to receive subsequent Work.

§ 3.4 Labor and Materials

§ 3.4.1 Unless otherwise provided in the Contract Documents, the Contractor shall provide and pay for labor, materials, equipment, tools, construction equipment and machinery, water, heat, utilities, transportation, and other facilities and services necessary for proper execution and completion of the Work, whether temporary or permanent and whether or not incorporated or to be incorporated in the Work.

§ 3.4.2 Except in the case of minor changes in the Work approved by the Architect in accordance with Section 3.12.8 or ordered by the Architect in accordance with Section 7.4, the Contractor may make substitutions only with the consent of the Owner, after evaluation by the Architect and in accordance with a Change Order or Construction Change Directive.

Init.
/

AIA Document A201® – 2017. Copyright © 1911, 1915, 1918, 1925, 1937, 1951, 1958, 1961, 1963, 1966, 1970, 1976, 1987, 1997, 2007 and 2017 by The American Institute of Architects. All rights reserved. The "American Institute of Architects," "AIA," the AIA Logo, "A201," and "AIA Contract Documents" are registered trademarks and may not be used without permission. This document was produced by AIA software at 11:45:22 ET on 02/16/2021 under Order No.6324187910 which expires on 02/16/2022, is not for resale, is licensed for one-time use only, and may only be used in accordance with the AIA Contract Documents® Terms of Service. To report copyright violations, e-mail copyright@aia.org.
User Notes:
(1697986356)

§ 3.4.3 The Contractor shall enforce strict discipline and good order among the Contractor's employees and other persons carrying out the Work. The Contractor shall not permit employment of unfit persons or persons not properly skilled in tasks assigned to them.

§ 3.5 Warranty

§ 3.5.1 The Contractor warrants to the Owner and Architect that materials and equipment furnished under the Contract will be of good quality and new unless the Contract Documents require or permit otherwise. The Contractor further warrants that the Work will conform to the requirements of the Contract Documents and will be free from defects, except for those inherent in the quality of the Work the Contract Documents require or permit. Work, materials, or equipment not conforming to these requirements may be considered defective. The Contractor's warranty excludes remedy for damage or defect caused by abuse, alterations to the Work not executed by the Contractor, improper or insufficient maintenance, improper operation, or normal wear and tear and normal usage. If required by the Architect, the Contractor shall furnish satisfactory evidence as to the kind and quality of materials and equipment.

§ 3.5.2 All material, equipment, or other special warranties required by the Contract Documents shall be issued in the name of the Owner, or shall be transferable to the Owner, and shall commence in accordance with Section 9.8.4.

§ 3.6 Taxes

The Contractor shall pay sales, consumer, use and similar taxes for the Work provided by the Contractor that are legally enacted when bids are received or negotiations concluded, whether or not yet effective or merely scheduled to go into effect.

§ 3.7 Permits, Fees, Notices and Compliance with Laws

§ 3.7.1 Unless otherwise provided in the Contract Documents, the Contractor shall secure and pay for the building permit as well as for other permits, fees, licenses, and inspections by government agencies necessary for proper execution and completion of the Work that are customarily secured after execution of the Contract and legally required at the time bids are received or negotiations concluded.

§ 3.7.2 The Contractor shall comply with and give notices required by applicable laws, statutes, ordinances, codes, rules and regulations, and lawful orders of public authorities applicable to performance of the Work.

§ 3.7.3 If the Contractor performs Work knowing it to be contrary to applicable laws, statutes, ordinances, codes, rules and regulations, or lawful orders of public authorities, the Contractor shall assume appropriate responsibility for such Work and shall bear the costs attributable to correction.

§ 3.7.4 Concealed or Unknown Conditions

If the Contractor encounters conditions at the site that are (1) subsurface or otherwise concealed physical conditions that differ materially from those indicated in the Contract Documents or (2) unknown physical conditions of an unusual nature that differ materially from those ordinarily found to exist and generally recognized as inherent in construction activities of the character provided for in the Contract Documents, the Contractor shall promptly provide notice to the Owner and the Architect before conditions are disturbed and in no event later than 14 days after first observance of the conditions. The Architect will promptly investigate such conditions and, if the Architect determines that they differ materially and cause an increase or decrease in the Contractor's cost of, or time required for, performance of any part of the Work, will recommend that an equitable adjustment be made in the Contract Sum or Contract Time, or both. If the Architect determines that the conditions at the site are not materially different from those indicated in the Contract Documents and that no change in the terms of the Contract is justified, the Architect shall promptly notify the Owner and Contractor, stating the reasons. If either party disputes the Architect's determination or recommendation, that party may submit a Claim as provided in Article 15.

§ 3.7.5 If, in the course of the Work, the Contractor encounters human remains or recognizes the existence of burial markers, archaeological sites or wetlands not indicated in the Contract Documents, the Contractor shall immediately suspend any operations that would affect them and shall notify the Owner and Architect. Upon receipt of such notice, the Owner shall promptly take any action necessary to obtain governmental authorization required to resume the operations. The Contractor shall continue to suspend such operations until otherwise instructed by the Owner but shall continue with all other operations that do not affect those remains or features. Requests for adjustments in the Contract Sum and Contract Time arising from the existence of such remains or features may be made as provided in Article 15.

Init.
/
AIA Document A201® – 2017. Copyright © 1911, 1915, 1918, 1925, 1937, 1951, 1958, 1961, 1963, 1966, 1970, 1976, 1987, 1997, 2007 and 2017 by The American Institute of Architects. All rights reserved. The "American Institute of Architects," "AIA," the AIA Logo, "A201," and "AIA Contract Documents" are registered trademarks and may not be used without permission. This document was produced by AIA software at 11:45:22 ET on 02/16/2021 under Order No.6324187910 which expires on 02/16/2022, is not for resale, is licensed for one-time use only, and may only be used in accordance with the AIA Contract Documents® Terms of Service. To report copyright violations, e-mail copyright@aia.org.
User Notes: (1697986356)

§ 3.8 Allowances

§ 3.8.1 The Contractor shall include in the Contract Sum all allowances stated in the Contract Documents. Items covered by allowances shall be supplied for such amounts and by such persons or entities as the Owner may direct, but the Contractor shall not be required to employ persons or entities to whom the Contractor has reasonable objection.

§ 3.8.2 Unless otherwise provided in the Contract Documents,

.1 allowances shall cover the cost to the Contractor of materials and equipment delivered at the site and all required taxes, less applicable trade discounts;

.2 Contractor's costs for unloading and handling at the site, labor, installation costs, overhead, profit, and other expenses contemplated for stated allowance amounts shall be included in the Contract Sum but not in the allowances; and

.3 whenever costs are more than or less than allowances, the Contract Sum shall be adjusted accordingly by Change Order. The amount of the Change Order shall reflect (1) the difference between actual costs and the allowances under Section 3.8.2.1 and (2) changes in Contractor's costs under Section 3.8.2.2.

§ 3.8.3 Materials and equipment under an allowance shall be selected by the Owner with reasonable promptness.

§ 3.9 Superintendent

§ 3.9.1 The Contractor shall employ a competent superintendent and necessary assistants who shall be in attendance at the Project site during performance of the Work. The superintendent shall represent the Contractor, and communications given to the superintendent shall be as binding as if given to the Contractor.

§ 3.9.2 The Contractor, as soon as practicable after award of the Contract, shall notify the Owner and Architect of the name and qualifications of a proposed superintendent. Within 14 days of receipt of the information, the Architect may notify the Contractor, stating whether the Owner or the Architect (1) has reasonable objection to the proposed superintendent or (2) requires additional time for review. Failure of the Architect to provide notice within the 14-day period shall constitute notice of no reasonable objection.

§ 3.9.3 The Contractor shall not employ a proposed superintendent to whom the Owner or Architect has made reasonable and timely objection. The Contractor shall not change the superintendent without the Owner's consent, which shall not unreasonably be withheld or delayed.

§ 3.10 Contractor's Construction and Submittal Schedules

§ 3.10.1 The Contractor, promptly after being awarded the Contract, shall submit for the Owner's and Architect's information a Contractor's construction schedule for the Work. The schedule shall contain detail appropriate for the Project, including (1) the date of commencement of the Work, interim schedule milestone dates, and the date of Substantial Completion; (2) an apportionment of the Work by construction activity; and (3) the time required for completion of each portion of the Work. The schedule shall provide for the orderly progression of the Work to completion and shall not exceed time limits current under the Contract Documents. The schedule shall be revised at appropriate intervals as required by the conditions of the Work and Project.

§ 3.10.2 The Contractor, promptly after being awarded the Contract and thereafter as necessary to maintain a current submittal schedule, shall submit a submittal schedule for the Architect's approval. The Architect's approval shall not be unreasonably delayed or withheld. The submittal schedule shall (1) be coordinated with the Contractor's construction schedule, and (2) allow the Architect reasonable time to review submittals. If the Contractor fails to submit a submittal schedule, or fails to provide submittals in accordance with the approved submittal schedule, the Contractor shall not be entitled to any increase in Contract Sum or extension of Contract Time based on the time required for review of submittals.

§ 3.10.3 The Contractor shall perform the Work in general accordance with the most recent schedules submitted to the Owner and Architect.

§ 3.11 Documents and Samples at the Site

The Contractor shall make available, at the Project site, the Contract Documents, including Change Orders, Construction Change Directives, and other Modifications, in good order and marked currently to indicate field changes and selections made during construction, and the approved Shop Drawings, Product Data, Samples, and similar required submittals. These shall be in electronic form or paper copy, available to the Architect and Owner, and

Init.
/

AIA Document A201® – 2017. Copyright © 1911, 1915, 1918, 1925, 1937, 1951, 1958, 1961, 1963, 1966, 1970, 1976, 1987, 1997, 2007 and 2017 by The American Institute of Architects. All rights reserved. The "American Institute of Architects," "AIA," the AIA Logo, "A201," and "AIA Contract Documents" are registered trademarks and may not be used without permission. This document was produced by AIA software at 11:45:22 ET on 02/16/2021 under Order No.6324187910 which expires on 02/16/2022, is not for resale, is licensed for one-time use only, and may only be used in accordance with the AIA Contract Documents® Terms of Service. To report copyright violations, e-mail copyright@aia.org.
User Notes: (1697986356)

delivered to the Architect for submittal to the Owner upon completion of the Work as a record of the Work as constructed.

§ 3.12 Shop Drawings, Product Data and Samples

§ 3.12.1 Shop Drawings are drawings, diagrams, schedules, and other data specially prepared for the Work by the Contractor or a Subcontractor, Sub-subcontractor, manufacturer, supplier, or distributor to illustrate some portion of the Work.

§ 3.12.2 Product Data are illustrations, standard schedules, performance charts, instructions, brochures, diagrams, and other information furnished by the Contractor to illustrate materials or equipment for some portion of the Work.

§ 3.12.3 Samples are physical examples that illustrate materials, equipment, or workmanship, and establish standards by which the Work will be judged.

§ 3.12.4 Shop Drawings, Product Data, Samples, and similar submittals are not Contract Documents. Their purpose is to demonstrate how the Contractor proposes to conform to the information given and the design concept expressed in the Contract Documents for those portions of the Work for which the Contract Documents require submittals. Review by the Architect is subject to the limitations of Section 4.2.7. Informational submittals upon which the Architect is not expected to take responsive action may be so identified in the Contract Documents. Submittals that are not required by the Contract Documents may be returned by the Architect without action.

§ 3.12.5 The Contractor shall review for compliance with the Contract Documents, approve, and submit to the Architect, Shop Drawings, Product Data, Samples, and similar submittals required by the Contract Documents, in accordance with the submittal schedule approved by the Architect or, in the absence of an approved submittal schedule, with reasonable promptness and in such sequence as to cause no delay in the Work or in the activities of the Owner or of Separate Contractors.

§ 3.12.6 By submitting Shop Drawings, Product Data, Samples, and similar submittals, the Contractor represents to the Owner and Architect that the Contractor has (1) reviewed and approved them, (2) determined and verified materials, field measurements and field construction criteria related thereto, or will do so, and (3) checked and coordinated the information contained within such submittals with the requirements of the Work and of the Contract Documents.

§ 3.12.7 The Contractor shall perform no portion of the Work for which the Contract Documents require submittal and review of Shop Drawings, Product Data, Samples, or similar submittals, until the respective submittal has been approved by the Architect.

§ 3.12.8 The Work shall be in accordance with approved submittals except that the Contractor shall not be relieved of responsibility for deviations from the requirements of the Contract Documents by the Architect's approval of Shop Drawings, Product Data, Samples, or similar submittals, unless the Contractor has specifically notified the Architect of such deviation at the time of submittal and (1) the Architect has given written approval to the specific deviation as a minor change in the Work, or (2) a Change Order or Construction Change Directive has been issued authorizing the deviation. The Contractor shall not be relieved of responsibility for errors or omissions in Shop Drawings, Product Data, Samples, or similar submittals, by the Architect's approval thereof.

§ 3.12.9 The Contractor shall direct specific attention, in writing or on resubmitted Shop Drawings, Product Data, Samples, or similar submittals, to revisions other than those requested by the Architect on previous submittals. In the absence of such notice, the Architect's approval of a resubmission shall not apply to such revisions.

§ 3.12.10 The Contractor shall not be required to provide professional services that constitute the practice of architecture or engineering unless such services are specifically required by the Contract Documents for a portion of the Work or unless the Contractor needs to provide such services in order to carry out the Contractor's responsibilities for construction means, methods, techniques, sequences, and procedures. The Contractor shall not be required to provide professional services in violation of applicable law.

§ 3.12.10.1 If professional design services or certifications by a design professional related to systems, materials, or equipment are specifically required of the Contractor by the Contract Documents, the Owner and the Architect will

AIA Document A201® – 2017. Copyright © 1911, 1915, 1918, 1925, 1937, 1951, 1958, 1961, 1963, 1966, 1970, 1976, 1987, 1997, 2007 and 2017 by The American Institute of Architects. All rights reserved. The "American Institute of Architects," "AIA," the AIA Logo, "A201," and "AIA Contract Documents" are registered trademarks and may not be used without permission. This document was produced by AIA software at 11:45:22 ET on 02/16/2021 under Order No.6324187910 which expires on 02/16/2022, is not for resale, is licensed for one-time use only, and may only be used in accordance with the AIA Contract Documents® Terms of Service. To report copyright violations, e-mail copyright@aia.org.
User Notes: (1697986356)

specify all performance and design criteria that such services must satisfy. The Contractor shall be entitled to rely upon the adequacy and accuracy of the performance and design criteria provided in the Contract Documents. The Contractor shall cause such services or certifications to be provided by an appropriately licensed design professional, whose signature and seal shall appear on all drawings, calculations, specifications, certifications, Shop Drawings, and other submittals prepared by such professional. Shop Drawings, and other submittals related to the Work, designed or certified by such professional, if prepared by others, shall bear such professional's written approval when submitted to the Architect. The Owner and the Architect shall be entitled to rely upon the adequacy and accuracy of the services, certifications, and approvals performed or provided by such design professionals, provided the Owner and Architect have specified to the Contractor the performance and design criteria that such services must satisfy. Pursuant to this Section 3.12.10, the Architect will review and approve or take other appropriate action on submittals only for the limited purpose of checking for conformance with information given and the design concept expressed in the Contract Documents.

§ 3.12.10.2 If the Contract Documents require the Contractor's design professional to certify that the Work has been performed in accordance with the design criteria, the Contractor shall furnish such certifications to the Architect at the time and in the form specified by the Architect.

§ 3.13 Use of Site

The Contractor shall confine operations at the site to areas permitted by applicable laws, statutes, ordinances, codes, rules and regulations, lawful orders of public authorities, and the Contract Documents and shall not unreasonably encumber the site with materials or equipment.

§ 3.14 Cutting and Patching

§ 3.14.1 The Contractor shall be responsible for cutting, fitting, or patching required to complete the Work or to make its parts fit together properly. All areas requiring cutting, fitting, or patching shall be restored to the condition existing prior to the cutting, fitting, or patching, unless otherwise required by the Contract Documents.

§ 3.14.2 The Contractor shall not damage or endanger a portion of the Work or fully or partially completed construction of the Owner or Separate Contractors by cutting, patching, or otherwise altering such construction, or by excavation. The Contractor shall not cut or otherwise alter construction by the Owner or a Separate Contractor except with written consent of the Owner and of the Separate Contractor. Consent shall not be unreasonably withheld. The Contractor shall not unreasonably withhold, from the Owner or a Separate Contractor, its consent to cutting or otherwise altering the Work.

§ 3.15 Cleaning Up

§ 3.15.1 The Contractor shall keep the premises and surrounding area free from accumulation of waste materials and rubbish caused by operations under the Contract. At completion of the Work, the Contractor shall remove waste materials, rubbish, the Contractor's tools, construction equipment, machinery, and surplus materials from and about the Project.

§ 3.15.2 If the Contractor fails to clean up as provided in the Contract Documents, the Owner may do so and the Owner shall be entitled to reimbursement from the Contractor.

§ 3.16 Access to Work

The Contractor shall provide the Owner and Architect with access to the Work in preparation and progress wherever located.

§ 3.17 Royalties, Patents and Copyrights

The Contractor shall pay all royalties and license fees. The Contractor shall defend suits or claims for infringement of copyrights and patent rights and shall hold the Owner and Architect harmless from loss on account thereof, but shall not be responsible for defense or loss when a particular design, process, or product of a particular manufacturer or manufacturers is required by the Contract Documents, or where the copyright violations are contained in Drawings, Specifications, or other documents prepared by the Owner or Architect. However, if an infringement of a copyright or patent is discovered by, or made known to, the Contractor, the Contractor shall be responsible for the loss unless the information is promptly furnished to the Architect.

AIA Document A201® – 2017. Copyright © 1911, 1915, 1918, 1925, 1937, 1951, 1958, 1961, 1963, 1966, 1970, 1976, 1987, 1997, 2007 and 2017 by The American Institute of Architects. All rights reserved. The "American Institute of Architects," "AIA," the AIA Logo, "A201," and "AIA Contract Documents" are registered trademarks and may not be used without permission. This document was produced by AIA software at 11:45:22 ET on 02/16/2021 under Order No.6324187910 which expires on 02/16/2022, is not for resale, is licensed for one-time use only, and may only be used in accordance with the AIA Contract Documents® Terms of Service. To report copyright violations, e-mail copyright@aia.org.
User Notes: (1697986356)

§ 3.18 Indemnification

§ 3.18.1 To the fullest extent permitted by law, the Contractor shall indemnify and hold harmless the Owner, Architect, Architect's consultants, and agents and employees of any of them from and against claims, damages, losses, and expenses, including but not limited to attorneys' fees, arising out of or resulting from performance of the Work, provided that such claim, damage, loss, or expense is attributable to bodily injury, sickness, disease or death, or to injury to or destruction of tangible property (other than the Work itself), but only to the extent caused by the negligent acts or omissions of the Contractor, a Subcontractor, anyone directly or indirectly employed by them, or anyone for whose acts they may be liable, regardless of whether or not such claim, damage, loss, or expense is caused in part by a party indemnified hereunder. Such obligation shall not be construed to negate, abridge, or reduce other rights or obligations of indemnity that would otherwise exist as to a party or person described in this Section 3.18.

§ 3.18.2 In claims against any person or entity indemnified under this Section 3.18 by an employee of the Contractor, a Subcontractor, anyone directly or indirectly employed by them, or anyone for whose acts they may be liable, the indemnification obligation under Section 3.18.1 shall not be limited by a limitation on amount or type of damages, compensation, or benefits payable by or for the Contractor or a Subcontractor under workers' compensation acts, disability benefit acts, or other employee benefit acts.

ARTICLE 4 ARCHITECT

§ 4.1 General

§ 4.1.1 The Architect is the person or entity retained by the Owner pursuant to Section 2.3.2 and identified as such in the Agreement.

§ 4.1.2 Duties, responsibilities, and limitations of authority of the Architect as set forth in the Contract Documents shall not be restricted, modified, or extended without written consent of the Owner, Contractor, and Architect. Consent shall not be unreasonably withheld.

§ 4.2 Administration of the Contract

§ 4.2.1 The Architect will provide administration of the Contract as described in the Contract Documents and will be an Owner's representative during construction until the date the Architect issues the final Certificate for Payment. The Architect will have authority to act on behalf of the Owner only to the extent provided in the Contract Documents.

§ 4.2.2 The Architect will visit the site at intervals appropriate to the stage of construction, or as otherwise agreed with the Owner, to become generally familiar with the progress and quality of the portion of the Work completed, and to determine in general if the Work observed is being performed in a manner indicating that the Work, when fully completed, will be in accordance with the Contract Documents. However, the Architect will not be required to make exhaustive or continuous on-site inspections to check the quality or quantity of the Work. The Architect will not have control over, charge of, or responsibility for the construction means, methods, techniques, sequences or procedures, or for the safety precautions and programs in connection with the Work, since these are solely the Contractor's rights and responsibilities under the Contract Documents.

§ 4.2.3 On the basis of the site visits, the Architect will keep the Owner reasonably informed about the progress and quality of the portion of the Work completed, and promptly report to the Owner (1) known deviations from the Contract Documents, (2) known deviations from the most recent construction schedule submitted by the Contractor, and (3) defects and deficiencies observed in the Work. The Architect will not be responsible for the Contractor's failure to perform the Work in accordance with the requirements of the Contract Documents. The Architect will not have control over or charge of, and will not be responsible for acts or omissions of, the Contractor, Subcontractors, or their agents or employees, or any other persons or entities performing portions of the Work.

§ 4.2.4 Communications

The Owner and Contractor shall include the Architect in all communications that relate to or affect the Architect's services or professional responsibilities. The Owner shall promptly notify the Architect of the substance of any direct communications between the Owner and the Contractor otherwise relating to the Project. Communications by and with the Architect's consultants shall be through the Architect. Communications by and with Subcontractors and suppliers shall be through the Contractor. Communications by and with Separate Contractors shall be through the Owner. The Contract Documents may specify other communication protocols.

Init.
/
AIA Document A201® – 2017. Copyright © 1911, 1915, 1918, 1925, 1937, 1951, 1958, 1961, 1963, 1966, 1970, 1976, 1987, 1997, 2007 and 2017 by The American Institute of Architects. All rights reserved. The "American Institute of Architects," "AIA," the AIA Logo, "A201," and "AIA Contract Documents" are registered trademarks and may not be used without permission. This document was produced by AIA software at 11:45:22 ET on 02/16/2021 under Order No.6324187910 which expires on 02/16/2022, is not for resale, is licensed for one-time use only, and may only be used in accordance with the AIA Contract Documents® Terms of Service. To report copyright violations, e-mail copyright@aia.org.
User Notes: (1697986356)

§ 4.2.5 Based on the Architect's evaluations of the Contractor's Applications for Payment, the Architect will review and certify the amounts due the Contractor and will issue Certificates for Payment in such amounts.

§ 4.2.6 The Architect has authority to reject Work that does not conform to the Contract Documents. Whenever the Architect considers it necessary or advisable, the Architect will have authority to require inspection or testing of the Work in accordance with Sections 13.4.2 and 13.4.3, whether or not the Work is fabricated, installed or completed. However, neither this authority of the Architect nor a decision made in good faith either to exercise or not to exercise such authority shall give rise to a duty or responsibility of the Architect to the Contractor, Subcontractors, suppliers, their agents or employees, or other persons or entities performing portions of the Work.

§ 4.2.7 The Architect will review and approve, or take other appropriate action upon, the Contractor's submittals such as Shop Drawings, Product Data, and Samples, but only for the limited purpose of checking for conformance with information given and the design concept expressed in the Contract Documents. The Architect's action will be taken in accordance with the submittal schedule approved by the Architect or, in the absence of an approved submittal schedule, with reasonable promptness while allowing sufficient time in the Architect's professional judgment to permit adequate review. Review of such submittals is not conducted for the purpose of determining the accuracy and completeness of other details such as dimensions and quantities, or for substantiating instructions for installation or performance of equipment or systems, all of which remain the responsibility of the Contractor as required by the Contract Documents. The Architect's review of the Contractor's submittals shall not relieve the Contractor of the obligations under Sections 3.3, 3.5, and 3.12. The Architect's review shall not constitute approval of safety precautions or of any construction means, methods, techniques, sequences, or procedures. The Architect's approval of a specific item shall not indicate approval of an assembly of which the item is a component.

§ 4.2.8 The Architect will prepare Change Orders and Construction Change Directives, and may order minor changes in the Work as provided in Section 7.4. The Architect will investigate and make determinations and recommendations regarding concealed and unknown conditions as provided in Section 3.7.4.

§ 4.2.9 The Architect will conduct inspections to determine the date or dates of Substantial Completion and the date of final completion; issue Certificates of Substantial Completion pursuant to Section 9.8; receive and forward to the Owner, for the Owner's review and records, written warranties and related documents required by the Contract and assembled by the Contractor pursuant to Section 9.10; and issue a final Certificate for Payment pursuant to Section 9.10.

§ 4.2.10 If the Owner and Architect agree, the Architect will provide one or more Project representatives to assist in carrying out the Architect's responsibilities at the site. The Owner shall notify the Contractor of any change in the duties, responsibilities and limitations of authority of the Project representatives.

§ 4.2.11 The Architect will interpret and decide matters concerning performance under, and requirements of, the Contract Documents on written request of either the Owner or Contractor. The Architect's response to such requests will be made in writing within any time limits agreed upon or otherwise with reasonable promptness.

§ 4.2.12 Interpretations and decisions of the Architect will be consistent with the intent of, and reasonably inferable from, the Contract Documents and will be in writing or in the form of drawings. When making such interpretations and decisions, the Architect will endeavor to secure faithful performance by both Owner and Contractor, will not show partiality to either, and will not be liable for results of interpretations or decisions rendered in good faith.

§ 4.2.13 The Architect's decisions on matters relating to aesthetic effect will be final if consistent with the intent expressed in the Contract Documents.

§ 4.2.14 The Architect will review and respond to requests for information about the Contract Documents. The Architect's response to such requests will be made in writing within any time limits agreed upon or otherwise with reasonable promptness. If appropriate, the Architect will prepare and issue supplemental Drawings and Specifications in response to the requests for information.

AIA Document A201® – 2017. Copyright © 1911, 1915, 1918, 1925, 1937, 1951, 1958, 1961, 1963, 1966, 1970, 1976, 1987, 1997, 2007 and 2017 by The American Institute of Architects. All rights reserved. The "American Institute of Architects," "AIA," the AIA Logo, "A201," and "AIA Contract Documents" are registered trademarks and may not be used without permission. This document was produced by AIA software at 11:45:22 ET on 02/16/2021 under Order No.6324187910 which expires on 02/16/2022, is not for resale, is licensed for one-time use only, and may only be used in accordance with the AIA Contract Documents® Terms of Service. To report copyright violations, e-mail copyright@aia.org.
User Notes: (1697986356)

ARTICLE 5 SUBCONTRACTORS

§ 5.1 Definitions

§ 5.1.1 A Subcontractor is a person or entity who has a direct contract with the Contractor to perform a portion of the Work at the site. The term "Subcontractor" is referred to throughout the Contract Documents as if singular in number and means a Subcontractor or an authorized representative of the Subcontractor. The term "Subcontractor" does not include a Separate Contractor or the subcontractors of a Separate Contractor.

§ 5.1.2 A Sub-subcontractor is a person or entity who has a direct or indirect contract with a Subcontractor to perform a portion of the Work at the site. The term "Sub-subcontractor" is referred to throughout the Contract Documents as if singular in number and means a Sub-subcontractor or an authorized representative of the Sub-subcontractor.

§ 5.2 Award of Subcontracts and Other Contracts for Portions of the Work

§ 5.2.1 Unless otherwise stated in the Contract Documents, the Contractor, as soon as practicable after award of the Contract, shall notify the Owner and Architect of the persons or entities proposed for each principal portion of the Work, including those who are to furnish materials or equipment fabricated to a special design. Within 14 days of receipt of the information, the Architect may notify the Contractor whether the Owner or the Architect (1) has reasonable objection to any such proposed person or entity or (2) requires additional time for review. Failure of the Architect to provide notice within the 14-day period shall constitute notice of no reasonable objection.

§ 5.2.2 The Contractor shall not contract with a proposed person or entity to whom the Owner or Architect has made reasonable and timely objection. The Contractor shall not be required to contract with anyone to whom the Contractor has made reasonable objection.

§ 5.2.3 If the Owner or Architect has reasonable objection to a person or entity proposed by the Contractor, the Contractor shall propose another to whom the Owner or Architect has no reasonable objection. If the proposed but rejected Subcontractor was reasonably capable of performing the Work, the Contract Sum and Contract Time shall be increased or decreased by the difference, if any, occasioned by such change, and an appropriate Change Order shall be issued before commencement of the substitute Subcontractor's Work. However, no increase in the Contract Sum or Contract Time shall be allowed for such change unless the Contractor has acted promptly and responsively in submitting names as required.

§ 5.2.4 The Contractor shall not substitute a Subcontractor, person, or entity for one previously selected if the Owner or Architect makes reasonable objection to such substitution.

§ 5.3 Subcontractual Relations

By appropriate written agreement, the Contractor shall require each Subcontractor, to the extent of the Work to be performed by the Subcontractor, to be bound to the Contractor by terms of the Contract Documents, and to assume toward the Contractor all the obligations and responsibilities, including the responsibility for safety of the Subcontractor's Work that the Contractor, by these Contract Documents, assumes toward the Owner and Architect. Each subcontract agreement shall preserve and protect the rights of the Owner and Architect under the Contract Documents with respect to the Work to be performed by the Subcontractor so that subcontracting thereof will not prejudice such rights, and shall allow to the Subcontractor, unless specifically provided otherwise in the subcontract agreement, the benefit of all rights, remedies, and redress against the Contractor that the Contractor, by the Contract Documents, has against the Owner. Where appropriate, the Contractor shall require each Subcontractor to enter into similar agreements with Sub-subcontractors. The Contractor shall make available to each proposed Subcontractor, prior to the execution of the subcontract agreement, copies of the Contract Documents to which the Subcontractor will be bound, and, upon written request of the Subcontractor, identify to the Subcontractor terms and conditions of the proposed subcontract agreement that may be at variance with the Contract Documents. Subcontractors will similarly make copies of applicable portions of such documents available to their respective proposed Sub-subcontractors.

§ 5.4 Contingent Assignment of Subcontracts

§ 5.4.1 Each subcontract agreement for a portion of the Work is assigned by the Contractor to the Owner, provided that

.1 assignment is effective only after termination of the Contract by the Owner for cause pursuant to Section 14.2 and only for those subcontract agreements that the Owner accepts by notifying the Subcontractor and Contractor; and

.2 assignment is subject to the prior rights of the surety, if any, obligated under bond relating to the Contract.

Init.
/

AIA Document A201® – 2017. Copyright © 1911, 1915, 1918, 1925, 1937, 1951, 1958, 1961, 1963, 1966, 1970, 1976, 1987, 1997, 2007 and 2017 by The American Institute of Architects. All rights reserved. The "American Institute of Architects," "AIA," the AIA Logo, "A201," and "AIA Contract Documents" are registered trademarks and may not be used without permission. This document was produced by AIA software at 11:45:22 ET on 02/16/2021 under Order No.6324187910 which expires on 02/16/2022, is not for resale, is licensed for one-time use only, and may only be used in accordance with the AIA Contract Documents® Terms of Service. To report copyright violations, e-mail copyright@aia.org.
User Notes: (1697986356)

When the Owner accepts the assignment of a subcontract agreement, the Owner assumes the Contractor's rights and obligations under the subcontract.

§ 5.4.2 Upon such assignment, if the Work has been suspended for more than 30 days, the Subcontractor's compensation shall be equitably adjusted for increases in cost resulting from the suspension.

§ 5.4.3 Upon assignment to the Owner under this Section 5.4, the Owner may further assign the subcontract to a successor contractor or other entity. If the Owner assigns the subcontract to a successor contractor or other entity, the Owner shall nevertheless remain legally responsible for all of the successor contractor's obligations under the subcontract.

ARTICLE 6 CONSTRUCTION BY OWNER OR BY SEPARATE CONTRACTORS

§ 6.1 Owner's Right to Perform Construction and to Award Separate Contracts

§ 6.1.1 The term "Separate Contractor(s)" shall mean other contractors retained by the Owner under separate agreements. The Owner reserves the right to perform construction or operations related to the Project with the Owner's own forces, and with Separate Contractors retained under Conditions of the Contract substantially similar to those of this Contract, including those provisions of the Conditions of the Contract related to insurance and waiver of subrogation.

§ 6.1.2 When separate contracts are awarded for different portions of the Project or other construction or operations on the site, the term "Contractor" in the Contract Documents in each case shall mean the Contractor who executes each separate Owner-Contractor Agreement.

§ 6.1.3 The Owner shall provide for coordination of the activities of the Owner's own forces and of each Separate Contractor with the Work of the Contractor, who shall cooperate with them. The Contractor shall participate with any Separate Contractors and the Owner in reviewing their construction schedules. The Contractor shall make any revisions to its construction schedule deemed necessary after a joint review and mutual agreement. The construction schedules shall then constitute the schedules to be used by the Contractor, Separate Contractors, and the Owner until subsequently revised.

§ 6.1.4 Unless otherwise provided in the Contract Documents, when the Owner performs construction or operations related to the Project with the Owner's own forces or with Separate Contractors, the Owner or its Separate Contractors shall have the same obligations and rights that the Contractor has under the Conditions of the Contract, including, without excluding others, those stated in Article 3, this Article 6, and Articles 10, 11, and 12.

§ 6.2 Mutual Responsibility

§ 6.2.1 The Contractor shall afford the Owner and Separate Contractors reasonable opportunity for introduction and storage of their materials and equipment and performance of their activities, and shall connect and coordinate the Contractor's construction and operations with theirs as required by the Contract Documents.

§ 6.2.2 If part of the Contractor's Work depends for proper execution or results upon construction or operations by the Owner or a Separate Contractor, the Contractor shall, prior to proceeding with that portion of the Work, promptly notify the Architect of apparent discrepancies or defects in the construction or operations by the Owner or Separate Contractor that would render it unsuitable for proper execution and results of the Contractor's Work. Failure of the Contractor to notify the Architect of apparent discrepancies or defects prior to proceeding with the Work shall constitute an acknowledgment that the Owner's or Separate Contractor's completed or partially completed construction is fit and proper to receive the Contractor's Work. The Contractor shall not be responsible for discrepancies or defects in the construction or operations by the Owner or Separate Contractor that are not apparent.

§ 6.2.3 The Contractor shall reimburse the Owner for costs the Owner incurs that are payable to a Separate Contractor because of the Contractor's delays, improperly timed activities or defective construction. The Owner shall be responsible to the Contractor for costs the Contractor incurs because of a Separate Contractor's delays, improperly timed activities, damage to the Work or defective construction.

§ 6.2.4 The Contractor shall promptly remedy damage that the Contractor wrongfully causes to completed or partially completed construction or to property of the Owner or Separate Contractor as provided in Section 10.2.5.

Init.
/
AIA Document A201® – 2017. Copyright © 1911, 1915, 1918, 1925, 1937, 1951, 1958, 1961, 1963, 1966, 1970, 1976, 1987, 1997, 2007 and 2017 by The American Institute of Architects. All rights reserved. The "American Institute of Architects," "AIA," the AIA Logo, "A201," and "AIA Contract Documents" are registered trademarks and may not be used without permission. This document was produced by AIA software at 11:45:22 ET on 02/16/2021 under Order No.6324187910 which expires on 02/16/2022, is not for resale, is licensed for one-time use only, and may only be used in accordance with the AIA Contract Documents® Terms of Service. To report copyright violations, e-mail copyright@aia.org.
User Notes: (1697986356)

§ 6.2.5 The Owner and each Separate Contractor shall have the same responsibilities for cutting and patching as are described for the Contractor in Section 3.14.

§ 6.3 Owner's Right to Clean Up

If a dispute arises among the Contractor, Separate Contractors, and the Owner as to the responsibility under their respective contracts for maintaining the premises and surrounding area free from waste materials and rubbish, the Owner may clean up and the Architect will allocate the cost among those responsible.

ARTICLE 7 CHANGES IN THE WORK

§ 7.1 General

§ 7.1.1 Changes in the Work may be accomplished after execution of the Contract, and without invalidating the Contract, by Change Order, Construction Change Directive or order for a minor change in the Work, subject to the limitations stated in this Article 7 and elsewhere in the Contract Documents.

§ 7.1.2 A Change Order shall be based upon agreement among the Owner, Contractor, and Architect. A Construction Change Directive requires agreement by the Owner and Architect and may or may not be agreed to by the Contractor. An order for a minor change in the Work may be issued by the Architect alone.

§ 7.1.3 Changes in the Work shall be performed under applicable provisions of the Contract Documents. The Contractor shall proceed promptly with changes in the Work, unless otherwise provided in the Change Order, Construction Change Directive, or order for a minor change in the Work.

§ 7.2 Change Orders

§ 7.2.1 A Change Order is a written instrument prepared by the Architect and signed by the Owner, Contractor, and Architect stating their agreement upon all of the following:

.1 The change in the Work;
.2 The amount of the adjustment, if any, in the Contract Sum; and
.3 The extent of the adjustment, if any, in the Contract Time.

§ 7.3 Construction Change Directives

§ 7.3.1 A Construction Change Directive is a written order prepared by the Architect and signed by the Owner and Architect, directing a change in the Work prior to agreement on adjustment, if any, in the Contract Sum or Contract Time, or both. The Owner may by Construction Change Directive, without invalidating the Contract, order changes in the Work within the general scope of the Contract consisting of additions, deletions, or other revisions, the Contract Sum and Contract Time being adjusted accordingly.

§ 7.3.2 A Construction Change Directive shall be used in the absence of total agreement on the terms of a Change Order.

§ 7.3.3 If the Construction Change Directive provides for an adjustment to the Contract Sum, the adjustment shall be based on one of the following methods:

.1 Mutual acceptance of a lump sum properly itemized and supported by sufficient substantiating data to permit evaluation;
.2 Unit prices stated in the Contract Documents or subsequently agreed upon;
.3 Cost to be determined in a manner agreed upon by the parties and a mutually acceptable fixed or percentage fee; or
.4 As provided in Section 7.3.4.

§ 7.3.4 If the Contractor does not respond promptly or disagrees with the method for adjustment in the Contract Sum, the Architect shall determine the adjustment on the basis of reasonable expenditures and savings of those performing the Work attributable to the change, including, in case of an increase in the Contract Sum, an amount for overhead and profit as set forth in the Agreement, or if no such amount is set forth in the Agreement, a reasonable amount. In such case, and also under Section 7.3.3.3, the Contractor shall keep and present, in such form as the Architect may prescribe, an itemized accounting together with appropriate supporting data. Unless otherwise provided in the Contract Documents, costs for the purposes of this Section 7.3.4 shall be limited to the following:

Init.
/
AIA Document A201® – 2017. Copyright © 1911, 1915, 1918, 1925, 1937, 1951, 1958, 1961, 1963, 1966, 1970, 1976, 1987, 1997, 2007 and 2017 by The American Institute of Architects. All rights reserved. The "American Institute of Architects," "AIA," the AIA Logo, "A201," and "AIA Contract Documents" are registered trademarks and may not be used without permission. This document was produced by AIA software at 11:45:22 ET on 02/16/2021 under Order No.6324187910 which expires on 02/16/2022, is not for resale, is licensed for one-time use only, and may only be used in accordance with the AIA Contract Documents® Terms of Service. To report copyright violations, e-mail copyright@aia.org.
User Notes:
(1697986356)

.1 Costs of labor, including applicable payroll taxes, fringe benefits required by agreement or custom, workers' compensation insurance, and other employee costs approved by the Architect;
.2 Costs of materials, supplies, and equipment, including cost of transportation, whether incorporated or consumed;
.3 Rental costs of machinery and equipment, exclusive of hand tools, whether rented from the Contractor or others;
.4 Costs of premiums for all bonds and insurance, permit fees, and sales, use, or similar taxes, directly related to the change; and
.5 Costs of supervision and field office personnel directly attributable to the change.

§ 7.3.5 If the Contractor disagrees with the adjustment in the Contract Time, the Contractor may make a Claim in accordance with applicable provisions of Article 15.

§ 7.3.6 Upon receipt of a Construction Change Directive, the Contractor shall promptly proceed with the change in the Work involved and advise the Architect of the Contractor's agreement or disagreement with the method, if any, provided in the Construction Change Directive for determining the proposed adjustment in the Contract Sum or Contract Time.

§ 7.3.7 A Construction Change Directive signed by the Contractor indicates the Contractor's agreement therewith, including adjustment in Contract Sum and Contract Time or the method for determining them. Such agreement shall be effective immediately and shall be recorded as a Change Order.

§ 7.3.8 The amount of credit to be allowed by the Contractor to the Owner for a deletion or change that results in a net decrease in the Contract Sum shall be actual net cost as confirmed by the Architect. When both additions and credits covering related Work or substitutions are involved in a change, the allowance for overhead and profit shall be figured on the basis of net increase, if any, with respect to that change.

§ 7.3.9 Pending final determination of the total cost of a Construction Change Directive to the Owner, the Contractor may request payment for Work completed under the Construction Change Directive in Applications for Payment. The Architect will make an interim determination for purposes of monthly certification for payment for those costs and certify for payment the amount that the Architect determines, in the Architect's professional judgment, to be reasonably justified. The Architect's interim determination of cost shall adjust the Contract Sum on the same basis as a Change Order, subject to the right of either party to disagree and assert a Claim in accordance with Article 15.

§ 7.3.10 When the Owner and Contractor agree with a determination made by the Architect concerning the adjustments in the Contract Sum and Contract Time, or otherwise reach agreement upon the adjustments, such agreement shall be effective immediately and the Architect will prepare a Change Order. Change Orders may be issued for all or any part of a Construction Change Directive.

§ 7.4 Minor Changes in the Work

The Architect may order minor changes in the Work that are consistent with the intent of the Contract Documents and do not involve an adjustment in the Contract Sum or an extension of the Contract Time. The Architect's order for minor changes shall be in writing. If the Contractor believes that the proposed minor change in the Work will affect the Contract Sum or Contract Time, the Contractor shall notify the Architect and shall not proceed to implement the change in the Work. If the Contractor performs the Work set forth in the Architect's order for a minor change without prior notice to the Architect that such change will affect the Contract Sum or Contract Time, the Contractor waives any adjustment to the Contract Sum or extension of the Contract Time.

ARTICLE 8 TIME

§ 8.1 Definitions

§ 8.1.1 Unless otherwise provided, Contract Time is the period of time, including authorized adjustments, allotted in the Contract Documents for Substantial Completion of the Work.

§ 8.1.2 The date of commencement of the Work is the date established in the Agreement.

§ 8.1.3 The date of Substantial Completion is the date certified by the Architect in accordance with Section 9.8.

AIA Document A201® – 2017. Copyright © 1911, 1915, 1918, 1925, 1937, 1951, 1958, 1961, 1963, 1966, 1970, 1976, 1987, 1997, 2007 and 2017 by The American Institute of Architects. All rights reserved. The "American Institute of Architects," "AIA," the AIA Logo, "A201," and "AIA Contract Documents" are registered trademarks and may not be used without permission. This document was produced by AIA software at 11:45:22 ET on 02/16/2021 under Order No.6324187910 which expires on 02/16/2022, is not for resale, is licensed for one-time use only, and may only be used in accordance with the AIA Contract Documents® Terms of Service. To report copyright violations, e-mail copyright@aia.org.
User Notes: (1697986356)

§ 8.1.4 The term "day" as used in the Contract Documents shall mean calendar day unless otherwise specifically defined.

§ 8.2 Progress and Completion

§ 8.2.1 Time limits stated in the Contract Documents are of the essence of the Contract. By executing the Agreement, the Contractor confirms that the Contract Time is a reasonable period for performing the Work.

§ 8.2.2 The Contractor shall not knowingly, except by agreement or instruction of the Owner in writing, commence the Work prior to the effective date of insurance required to be furnished by the Contractor and Owner.

§ 8.2.3 The Contractor shall proceed expeditiously with adequate forces and shall achieve Substantial Completion within the Contract Time.

§ 8.3 Delays and Extensions of Time

§ 8.3.1 If the Contractor is delayed at any time in the commencement or progress of the Work by (1) an act or neglect of the Owner or Architect, of an employee of either, or of a Separate Contractor; (2) by changes ordered in the Work; (3) by labor disputes, fire, unusual delay in deliveries, unavoidable casualties, adverse weather conditions documented in accordance with Section 15.1.6.2, or other causes beyond the Contractor's control; (4) by delay authorized by the Owner pending mediation and binding dispute resolution; or (5) by other causes that the Contractor asserts, and the Architect determines, justify delay, then the Contract Time shall be extended for such reasonable time as the Architect may determine.

§ 8.3.2 Claims relating to time shall be made in accordance with applicable provisions of Article 15.

§ 8.3.3 This Section 8.3 does not preclude recovery of damages for delay by either party under other provisions of the Contract Documents.

ARTICLE 9 PAYMENTS AND COMPLETION

§ 9.1 Contract Sum

§ 9.1.1 The Contract Sum is stated in the Agreement and, including authorized adjustments, is the total amount payable by the Owner to the Contractor for performance of the Work under the Contract Documents.

§ 9.1.2 If unit prices are stated in the Contract Documents or subsequently agreed upon, and if quantities originally contemplated are materially changed so that application of such unit prices to the actual quantities causes substantial inequity to the Owner or Contractor, the applicable unit prices shall be equitably adjusted.

§ 9.2 Schedule of Values

Where the Contract is based on a stipulated sum or Guaranteed Maximum Price, the Contractor shall submit a schedule of values to the Architect before the first Application for Payment, allocating the entire Contract Sum to the various portions of the Work. The schedule of values shall be prepared in the form, and supported by the data to substantiate its accuracy, required by the Architect. This schedule, unless objected to by the Architect, shall be used as a basis for reviewing the Contractor's Applications for Payment. Any changes to the schedule of values shall be submitted to the Architect and supported by such data to substantiate its accuracy as the Architect may require, and unless objected to by the Architect, shall be used as a basis for reviewing the Contractor's subsequent Applications for Payment.

§ 9.3 Applications for Payment

§ 9.3.1 At least ten days before the date established for each progress payment, the Contractor shall submit to the Architect an itemized Application for Payment prepared in accordance with the schedule of values, if required under Section 9.2, for completed portions of the Work. The application shall be notarized, if required, and supported by all data substantiating the Contractor's right to payment that the Owner or Architect require, such as copies of requisitions, and releases and waivers of liens from Subcontractors and suppliers, and shall reflect retainage if provided for in the Contract Documents.

§ 9.3.1.1 As provided in Section 7.3.9, such applications may include requests for payment on account of changes in the Work that have been properly authorized by Construction Change Directives, or by interim determinations of the Architect, but not yet included in Change Orders.

Init.
/
AIA Document A201® – 2017. Copyright © 1911, 1915, 1918, 1925, 1937, 1951, 1958, 1961, 1963, 1966, 1970, 1976, 1987, 1997, 2007 and 2017 by The American Institute of Architects. All rights reserved. The "American Institute of Architects," "AIA," the AIA Logo, "A201," and "AIA Contract Documents" are registered trademarks and may not be used without permission. This document was produced by AIA software at 11:45:22 ET on 02/16/2021 under Order No.6324187910 which expires on 02/16/2022, is not for resale, is licensed for one-time use only, and may only be used in accordance with the AIA Contract Documents® Terms of Service. To report copyright violations, e-mail copyright@aia.org.
User Notes: (1697986356)

§ 9.3.1.2 Applications for Payment shall not include requests for payment for portions of the Work for which the Contractor does not intend to pay a Subcontractor or supplier, unless such Work has been performed by others whom the Contractor intends to pay.

§ 9.3.2 Unless otherwise provided in the Contract Documents, payments shall be made on account of materials and equipment delivered and suitably stored at the site for subsequent incorporation in the Work. If approved in advance by the Owner, payment may similarly be made for materials and equipment suitably stored off the site at a location agreed upon in writing. Payment for materials and equipment stored on or off the site shall be conditioned upon compliance by the Contractor with procedures satisfactory to the Owner to establish the Owner's title to such materials and equipment or otherwise protect the Owner's interest, and shall include the costs of applicable insurance, storage, and transportation to the site, for such materials and equipment stored off the site.

§ 9.3.3 The Contractor warrants that title to all Work covered by an Application for Payment will pass to the Owner no later than the time of payment. The Contractor further warrants that upon submittal of an Application for Payment all Work for which Certificates for Payment have been previously issued and payments received from the Owner shall, to the best of the Contractor's knowledge, information, and belief, be free and clear of liens, claims, security interests, or encumbrances, in favor of the Contractor, Subcontractors, suppliers, or other persons or entities that provided labor, materials, and equipment relating to the Work.

§ 9.4 Certificates for Payment

§ 9.4.1 The Architect will, within seven days after receipt of the Contractor's Application for Payment, either (1) issue to the Owner a Certificate for Payment in the full amount of the Application for Payment, with a copy to the Contractor; or (2) issue to the Owner a Certificate for Payment for such amount as the Architect determines is properly due, and notify the Contractor and Owner of the Architect's reasons for withholding certification in part as provided in Section 9.5.1; or (3) withhold certification of the entire Application for Payment, and notify the Contractor and Owner of the Architect's reason for withholding certification in whole as provided in Section 9.5.1.

§ 9.4.2 The issuance of a Certificate for Payment will constitute a representation by the Architect to the Owner, based on the Architect's evaluation of the Work and the data in the Application for Payment, that, to the best of the Architect's knowledge, information, and belief, the Work has progressed to the point indicated, the quality of the Work is in accordance with the Contract Documents, and that the Contractor is entitled to payment in the amount certified. The foregoing representations are subject to an evaluation of the Work for conformance with the Contract Documents upon Substantial Completion, to results of subsequent tests and inspections, to correction of minor deviations from the Contract Documents prior to completion, and to specific qualifications expressed by the Architect. However, the issuance of a Certificate for Payment will not be a representation that the Architect has (1) made exhaustive or continuous on-site inspections to check the quality or quantity of the Work; (2) reviewed construction means, methods, techniques, sequences, or procedures; (3) reviewed copies of requisitions received from Subcontractors and suppliers and other data requested by the Owner to substantiate the Contractor's right to payment; or (4) made examination to ascertain how or for what purpose the Contractor has used money previously paid on account of the Contract Sum.

§ 9.5 Decisions to Withhold Certification

§ 9.5.1 The Architect may withhold a Certificate for Payment in whole or in part, to the extent reasonably necessary to protect the Owner, if in the Architect's opinion the representations to the Owner required by Section 9.4.2 cannot be made. If the Architect is unable to certify payment in the amount of the Application, the Architect will notify the Contractor and Owner as provided in Section 9.4.1. If the Contractor and Architect cannot agree on a revised amount, the Architect will promptly issue a Certificate for Payment for the amount for which the Architect is able to make such representations to the Owner. The Architect may also withhold a Certificate for Payment or, because of subsequently discovered evidence, may nullify the whole or a part of a Certificate for Payment previously issued, to such extent as may be necessary in the Architect's opinion to protect the Owner from loss for which the Contractor is responsible, including loss resulting from acts and omissions described in Section 3.3.2, because of

.1 defective Work not remedied;

.2 third party claims filed or reasonable evidence indicating probable filing of such claims, unless security acceptable to the Owner is provided by the Contractor;

.3 failure of the Contractor to make payments properly to Subcontractors or suppliers for labor, materials or equipment;

Init.
/
AIA Document A201® – 2017. Copyright © 1911, 1915, 1918, 1925, 1937, 1951, 1958, 1961, 1963, 1966, 1970, 1976, 1987, 1997, 2007 and 2017 by The American Institute of Architects. All rights reserved. The "American Institute of Architects," "AIA," the AIA Logo, "A201," and "AIA Contract Documents" are registered trademarks and may not be used without permission. This document was produced by AIA software at 11:45:22 ET on 02/16/2021 under Order No.6324187910 which expires on 02/16/2022, is not for resale, is licensed for one-time use only, and may only be used in accordance with the AIA Contract Documents® Terms of Service. To report copyright violations, e-mail copyright@aia.org.
User Notes: (1697986356)

.4 reasonable evidence that the Work cannot be completed for the unpaid balance of the Contract Sum;
.5 damage to the Owner or a Separate Contractor;
.6 reasonable evidence that the Work will not be completed within the Contract Time, and that the unpaid balance would not be adequate to cover actual or liquidated damages for the anticipated delay; or
.7 repeated failure to carry out the Work in accordance with the Contract Documents.

§ 9.5.2 When either party disputes the Architect's decision regarding a Certificate for Payment under Section 9.5.1, in whole or in part, that party may submit a Claim in accordance with Article 15.

§ 9.5.3 When the reasons for withholding certification are removed, certification will be made for amounts previously withheld.

§ 9.5.4 If the Architect withholds certification for payment under Section 9.5.1.3, the Owner may, at its sole option, issue joint checks to the Contractor and to any Subcontractor or supplier to whom the Contractor failed to make payment for Work properly performed or material or equipment suitably delivered. If the Owner makes payments by joint check, the Owner shall notify the Architect and the Contractor shall reflect such payment on its next Application for Payment.

§ 9.6 Progress Payments

§ 9.6.1 After the Architect has issued a Certificate for Payment, the Owner shall make payment in the manner and within the time provided in the Contract Documents, and shall so notify the Architect.

§ 9.6.2 The Contractor shall pay each Subcontractor, no later than seven days after receipt of payment from the Owner, the amount to which the Subcontractor is entitled, reflecting percentages actually retained from payments to the Contractor on account of the Subcontractor's portion of the Work. The Contractor shall, by appropriate agreement with each Subcontractor, require each Subcontractor to make payments to Sub-subcontractors in a similar manner.

§ 9.6.3 The Architect will, on request, furnish to a Subcontractor, if practicable, information regarding percentages of completion or amounts applied for by the Contractor and action taken thereon by the Architect and Owner on account of portions of the Work done by such Subcontractor.

§ 9.6.4 The Owner has the right to request written evidence from the Contractor that the Contractor has properly paid Subcontractors and suppliers amounts paid by the Owner to the Contractor for subcontracted Work. If the Contractor fails to furnish such evidence within seven days, the Owner shall have the right to contact Subcontractors and suppliers to ascertain whether they have been properly paid. Neither the Owner nor Architect shall have an obligation to pay, or to see to the payment of money to, a Subcontractor or supplier, except as may otherwise be required by law.

§ 9.6.5 The Contractor's payments to suppliers shall be treated in a manner similar to that provided in Sections 9.6.2, 9.6.3 and 9.6.4.

§ 9.6.6 A Certificate for Payment, a progress payment, or partial or entire use or occupancy of the Project by the Owner shall not constitute acceptance of Work not in accordance with the Contract Documents.

§ 9.6.7 Unless the Contractor provides the Owner with a payment bond in the full penal sum of the Contract Sum, payments received by the Contractor for Work properly performed by Subcontractors or provided by suppliers shall be held by the Contractor for those Subcontractors or suppliers who performed Work or furnished materials, or both, under contract with the Contractor for which payment was made by the Owner. Nothing contained herein shall require money to be placed in a separate account and not commingled with money of the Contractor, create any fiduciary liability or tort liability on the part of the Contractor for breach of trust, or entitle any person or entity to an award of punitive damages against the Contractor for breach of the requirements of this provision.

§ 9.6.8 Provided the Owner has fulfilled its payment obligations under the Contract Documents, the Contractor shall defend and indemnify the Owner from all loss, liability, damage or expense, including reasonable attorney's fees and litigation expenses, arising out of any lien claim or other claim for payment by any Subcontractor or supplier of any tier. Upon receipt of notice of a lien claim or other claim for payment, the Owner shall notify the Contractor. If approved by the applicable court, when required, the Contractor may substitute a surety bond for the property against which the lien or other claim for payment has been asserted.

Init.
/
AIA Document A201® – 2017. Copyright © 1911, 1915, 1918, 1925, 1937, 1951, 1958, 1961, 1963, 1966, 1970, 1976, 1987, 1997, 2007 and 2017 by The American Institute of Architects. All rights reserved. The "American Institute of Architects," "AIA," the AIA Logo, "A201," and "AIA Contract Documents" are registered trademarks and may not be used without permission. This document was produced by AIA software at 11:45:22 ET on 02/16/2021 under Order No.6324187910 which expires on 02/16/2022, is not for resale, is licensed for one-time use only, and may only be used in accordance with the AIA Contract Documents® Terms of Service. To report copyright violations, e-mail copyright@aia.org.
User Notes: (1697986356)

§ 9.7 Failure of Payment
If the Architect does not issue a Certificate for Payment, through no fault of the Contractor, within seven days after receipt of the Contractor's Application for Payment, or if the Owner does not pay the Contractor within seven days after the date established in the Contract Documents, the amount certified by the Architect or awarded by binding dispute resolution, then the Contractor may, upon seven additional days' notice to the Owner and Architect, stop the Work until payment of the amount owing has been received. The Contract Time shall be extended appropriately and the Contract Sum shall be increased by the amount of the Contractor's reasonable costs of shutdown, delay and start-up, plus interest as provided for in the Contract Documents.

§ 9.8 Substantial Completion
§ 9.8.1 Substantial Completion is the stage in the progress of the Work when the Work or designated portion thereof is sufficiently complete in accordance with the Contract Documents so that the Owner can occupy or utilize the Work for its intended use.

§ 9.8.2 When the Contractor considers that the Work, or a portion thereof which the Owner agrees to accept separately, is substantially complete, the Contractor shall prepare and submit to the Architect a comprehensive list of items to be completed or corrected prior to final payment. Failure to include an item on such list does not alter the responsibility of the Contractor to complete all Work in accordance with the Contract Documents.

§ 9.8.3 Upon receipt of the Contractor's list, the Architect will make an inspection to determine whether the Work or designated portion thereof is substantially complete. If the Architect's inspection discloses any item, whether or not included on the Contractor's list, which is not sufficiently complete in accordance with the Contract Documents so that the Owner can occupy or utilize the Work or designated portion thereof for its intended use, the Contractor shall, before issuance of the Certificate of Substantial Completion, complete or correct such item upon notification by the Architect. In such case, the Contractor shall then submit a request for another inspection by the Architect to determine Substantial Completion.

§ 9.8.4 When the Work or designated portion thereof is substantially complete, the Architect will prepare a Certificate of Substantial Completion that shall establish the date of Substantial Completion; establish responsibilities of the Owner and Contractor for security, maintenance, heat, utilities, damage to the Work and insurance; and fix the time within which the Contractor shall finish all items on the list accompanying the Certificate. Warranties required by the Contract Documents shall commence on the date of Substantial Completion of the Work or designated portion thereof unless otherwise provided in the Certificate of Substantial Completion.

§ 9.8.5 The Certificate of Substantial Completion shall be submitted to the Owner and Contractor for their written acceptance of responsibilities assigned to them in the Certificate. Upon such acceptance, and consent of surety if any, the Owner shall make payment of retainage applying to the Work or designated portion thereof. Such payment shall be adjusted for Work that is incomplete or not in accordance with the requirements of the Contract Documents.

§ 9.9 Partial Occupancy or Use
§ 9.9.1 The Owner may occupy or use any completed or partially completed portion of the Work at any stage when such portion is designated by separate agreement with the Contractor, provided such occupancy or use is consented to by the insurer and authorized by public authorities having jurisdiction over the Project. Such partial occupancy or use may commence whether or not the portion is substantially complete, provided the Owner and Contractor have accepted in writing the responsibilities assigned to each of them for payments, retainage, if any, security, maintenance, heat, utilities, damage to the Work and insurance, and have agreed in writing concerning the period for correction of the Work and commencement of warranties required by the Contract Documents. When the Contractor considers a portion substantially complete, the Contractor shall prepare and submit a list to the Architect as provided under Section 9.8.2. Consent of the Contractor to partial occupancy or use shall not be unreasonably withheld. The stage of the progress of the Work shall be determined by written agreement between the Owner and Contractor or, if no agreement is reached, by decision of the Architect.

§ 9.9.2 Immediately prior to such partial occupancy or use, the Owner, Contractor, and Architect shall jointly inspect the area to be occupied or portion of the Work to be used in order to determine and record the condition of the Work.

AIA Document A201® – 2017. Copyright © 1911, 1915, 1918, 1925, 1937, 1951, 1958, 1961, 1963, 1966, 1970, 1976, 1987, 1997, 2007 and 2017 by The American Institute of Architects. All rights reserved. The "American Institute of Architects," "AIA," the AIA Logo, "A201," and "AIA Contract Documents" are registered trademarks and may not be used without permission. This document was produced by AIA software at 11:45:22 ET on 02/16/2021 under Order No.6324187910 which expires on 02/16/2022, is not for resale, is licensed for one-time use only, and may only be used in accordance with the AIA Contract Documents® Terms of Service. To report copyright violations, e-mail copyright@aia.org.
User Notes: (1697986356)

§ 9.9.3 Unless otherwise agreed upon, partial occupancy or use of a portion or portions of the Work shall not constitute acceptance of Work not complying with the requirements of the Contract Documents.

§ 9.10 Final Completion and Final Payment

§ 9.10.1 Upon receipt of the Contractor's notice that the Work is ready for final inspection and acceptance and upon receipt of a final Application for Payment, the Architect will promptly make such inspection. When the Architect finds the Work acceptable under the Contract Documents and the Contract fully performed, the Architect will promptly issue a final Certificate for Payment stating that to the best of the Architect's knowledge, information and belief, and on the basis of the Architect's on-site visits and inspections, the Work has been completed in accordance with the Contract Documents and that the entire balance found to be due the Contractor and noted in the final Certificate is due and payable. The Architect's final Certificate for Payment will constitute a further representation that conditions listed in Section 9.10.2 as precedent to the Contractor's being entitled to final payment have been fulfilled.

§ 9.10.2 Neither final payment nor any remaining retained percentage shall become due until the Contractor submits to the Architect (1) an affidavit that payrolls, bills for materials and equipment, and other indebtedness connected with the Work for which the Owner or the Owner's property might be responsible or encumbered (less amounts withheld by Owner) have been paid or otherwise satisfied, (2) a certificate evidencing that insurance required by the Contract Documents to remain in force after final payment is currently in effect, (3) a written statement that the Contractor knows of no reason that the insurance will not be renewable to cover the period required by the Contract Documents, (4) consent of surety, if any, to final payment, (5) documentation of any special warranties, such as manufacturers' warranties or specific Subcontractor warranties, and (6) if required by the Owner, other data establishing payment or satisfaction of obligations, such as receipts and releases and waivers of liens, claims, security interests, or encumbrances arising out of the Contract, to the extent and in such form as may be designated by the Owner. If a Subcontractor refuses to furnish a release or waiver required by the Owner, the Contractor may furnish a bond satisfactory to the Owner to indemnify the Owner against such lien, claim, security interest, or encumbrance. If a lien, claim, security interest, or encumbrance remains unsatisfied after payments are made, the Contractor shall refund to the Owner all money that the Owner may be compelled to pay in discharging the lien, claim, security interest, or encumbrance, including all costs and reasonable attorneys' fees.

§ 9.10.3 If, after Substantial Completion of the Work, final completion thereof is materially delayed through no fault of the Contractor or by issuance of Change Orders affecting final completion, and the Architect so confirms, the Owner shall, upon application by the Contractor and certification by the Architect, and without terminating the Contract, make payment of the balance due for that portion of the Work fully completed, corrected, and accepted. If the remaining balance for Work not fully completed or corrected is less than retainage stipulated in the Contract Documents, and if bonds have been furnished, the written consent of the surety to payment of the balance due for that portion of the Work fully completed and accepted shall be submitted by the Contractor to the Architect prior to certification of such payment. Such payment shall be made under terms and conditions governing final payment, except that it shall not constitute a waiver of Claims.

§ 9.10.4 The making of final payment shall constitute a waiver of Claims by the Owner except those arising from

- **.1** liens, Claims, security interests, or encumbrances arising out of the Contract and unsettled;
- **.2** failure of the Work to comply with the requirements of the Contract Documents;
- **.3** terms of special warranties required by the Contract Documents; or
- **.4** audits performed by the Owner, if permitted by the Contract Documents, after final payment.

§ 9.10.5 Acceptance of final payment by the Contractor, a Subcontractor, or a supplier, shall constitute a waiver of claims by that payee except those previously made in writing and identified by that payee as unsettled at the time of final Application for Payment.

ARTICLE 10 PROTECTION OF PERSONS AND PROPERTY

§ 10.1 Safety Precautions and Programs

The Contractor shall be responsible for initiating, maintaining, and supervising all safety precautions and programs in connection with the performance of the Contract.

§ 10.2 Safety of Persons and Property

§ 10.2.1 The Contractor shall take reasonable precautions for safety of, and shall provide reasonable protection to prevent damage, injury, or loss to

Init.
/

AIA Document A201® – 2017. Copyright © 1911, 1915, 1918, 1925, 1937, 1951, 1958, 1961, 1963, 1966, 1970, 1976, 1987, 1997, 2007 and 2017 by The American Institute of Architects. All rights reserved. The "American Institute of Architects," "AIA," the AIA Logo, "A201," and "AIA Contract Documents" are registered trademarks and may not be used without permission. This document was produced by AIA software at 11:45:22 ET on 02/16/2021 under Order No.6324187910 which expires on 02/16/2022, is not for resale, is licensed for one-time use only, and may only be used in accordance with the AIA Contract Documents® Terms of Service. To report copyright violations, e-mail copyright@aia.org.
User Notes: (1697986356)

.1 employees on the Work and other persons who may be affected thereby;
.2 the Work and materials and equipment to be incorporated therein, whether in storage on or off the site, under care, custody, or control of the Contractor, a Subcontractor, or a Sub-subcontractor; and
.3 other property at the site or adjacent thereto, such as trees, shrubs, lawns, walks, pavements, roadways, structures, and utilities not designated for removal, relocation, or replacement in the course of construction.

§ 10.2.2 The Contractor shall comply with, and give notices required by applicable laws, statutes, ordinances, codes, rules and regulations, and lawful orders of public authorities, bearing on safety of persons or property or their protection from damage, injury, or loss.

§ 10.2.3 The Contractor shall implement, erect, and maintain, as required by existing conditions and performance of the Contract, reasonable safeguards for safety and protection, including posting danger signs and other warnings against hazards; promulgating safety regulations; and notifying the owners and users of adjacent sites and utilities of the safeguards.

§ 10.2.4 When use or storage of explosives or other hazardous materials or equipment, or unusual methods are necessary for execution of the Work, the Contractor shall exercise utmost care and carry on such activities under supervision of properly qualified personnel.

§ 10.2.5 The Contractor shall promptly remedy damage and loss (other than damage or loss insured under property insurance required by the Contract Documents) to property referred to in Sections 10.2.1.2 and 10.2.1.3 caused in whole or in part by the Contractor, a Subcontractor, a Sub-subcontractor, or anyone directly or indirectly employed by any of them, or by anyone for whose acts they may be liable and for which the Contractor is responsible under Sections 10.2.1.2 and 10.2.1.3. The Contractor may make a Claim for the cost to remedy the damage or loss to the extent such damage or loss is attributable to acts or omissions of the Owner or Architect or anyone directly or indirectly employed by either of them, or by anyone for whose acts either of them may be liable, and not attributable to the fault or negligence of the Contractor. The foregoing obligations of the Contractor are in addition to the Contractor's obligations under Section 3.18.

§ 10.2.6 The Contractor shall designate a responsible member of the Contractor's organization at the site whose duty shall be the prevention of accidents. This person shall be the Contractor's superintendent unless otherwise designated by the Contractor in writing to the Owner and Architect.

§ 10.2.7 The Contractor shall not permit any part of the construction or site to be loaded so as to cause damage or create an unsafe condition.

§ 10.2.8 Injury or Damage to Person or Property
If either party suffers injury or damage to person or property because of an act or omission of the other party, or of others for whose acts such party is legally responsible, notice of the injury or damage, whether or not insured, shall be given to the other party within a reasonable time not exceeding 21 days after discovery. The notice shall provide sufficient detail to enable the other party to investigate the matter.

§ 10.3 Hazardous Materials and Substances
§ 10.3.1 The Contractor is responsible for compliance with any requirements included in the Contract Documents regarding hazardous materials or substances. If the Contractor encounters a hazardous material or substance not addressed in the Contract Documents and if reasonable precautions will be inadequate to prevent foreseeable bodily injury or death to persons resulting from a material or substance, including but not limited to asbestos or polychlorinated biphenyl (PCB), encountered on the site by the Contractor, the Contractor shall, upon recognizing the condition, immediately stop Work in the affected area and notify the Owner and Architect of the condition.

§ 10.3.2 Upon receipt of the Contractor's notice, the Owner shall obtain the services of a licensed laboratory to verify the presence or absence of the material or substance reported by the Contractor and, in the event such material or substance is found to be present, to cause it to be rendered harmless. Unless otherwise required by the Contract Documents, the Owner shall furnish in writing to the Contractor and Architect the names and qualifications of persons or entities who are to perform tests verifying the presence or absence of the material or substance or who are to perform the task of removal or safe containment of the material or substance. The Contractor and the Architect will

Init.
/
AIA Document A201® – 2017. Copyright © 1911, 1915, 1918, 1925, 1937, 1951, 1958, 1961, 1963, 1966, 1970, 1976, 1987, 1997, 2007 and 2017 by The American Institute of Architects. All rights reserved. The "American Institute of Architects," "AIA," the AIA Logo, "A201," and "AIA Contract Documents" are registered trademarks and may not be used without permission. This document was produced by AIA software at 11:45:22 ET on 02/16/2021 under Order No.6324187910 which expires on 02/16/2022, is not for resale, is licensed for one-time use only, and may only be used in accordance with the AIA Contract Documents® Terms of Service. To report copyright violations, e-mail copyright@aia.org.
User Notes: (1697986356)

promptly reply to the Owner in writing stating whether or not either has reasonable objection to the persons or entities proposed by the Owner. If either the Contractor or Architect has an objection to a person or entity proposed by the Owner, the Owner shall propose another to whom the Contractor and the Architect have no reasonable objection. When the material or substance has been rendered harmless, Work in the affected area shall resume upon written agreement of the Owner and Contractor. By Change Order, the Contract Time shall be extended appropriately and the Contract Sum shall be increased by the amount of the Contractor's reasonable additional costs of shutdown, delay, and start-up.

§ 10.3.3 To the fullest extent permitted by law, the Owner shall indemnify and hold harmless the Contractor, Subcontractors, Architect, Architect's consultants, and agents and employees of any of them from and against claims, damages, losses, and expenses, including but not limited to attorneys' fees, arising out of or resulting from performance of the Work in the affected area if in fact the material or substance presents the risk of bodily injury or death as described in Section 10.3.1 and has not been rendered harmless, provided that such claim, damage, loss, or expense is attributable to bodily injury, sickness, disease or death, or to injury to or destruction of tangible property (other than the Work itself), except to the extent that such damage, loss, or expense is due to the fault or negligence of the party seeking indemnity.

§ 10.3.4 The Owner shall not be responsible under this Section 10.3 for hazardous materials or substances the Contractor brings to the site unless such materials or substances are required by the Contract Documents. The Owner shall be responsible for hazardous materials or substances required by the Contract Documents, except to the extent of the Contractor's fault or negligence in the use and handling of such materials or substances.

§ 10.3.5 The Contractor shall reimburse the Owner for the cost and expense the Owner incurs (1) for remediation of hazardous materials or substances the Contractor brings to the site and negligently handles, or (2) where the Contractor fails to perform its obligations under Section 10.3.1, except to the extent that the cost and expense are due to the Owner's fault or negligence.

§ 10.3.6 If, without negligence on the part of the Contractor, the Contractor is held liable by a government agency for the cost of remediation of a hazardous material or substance solely by reason of performing Work as required by the Contract Documents, the Owner shall reimburse the Contractor for all cost and expense thereby incurred.

§ 10.4 Emergencies

In an emergency affecting safety of persons or property, the Contractor shall act, at the Contractor's discretion, to prevent threatened damage, injury, or loss. Additional compensation or extension of time claimed by the Contractor on account of an emergency shall be determined as provided in Article 15 and Article 7.

ARTICLE 11 INSURANCE AND BONDS

§ 11.1 Contractor's Insurance and Bonds

§ 11.1.1 The Contractor shall purchase and maintain insurance of the types and limits of liability, containing the endorsements, and subject to the terms and conditions, as described in the Agreement or elsewhere in the Contract Documents. The Contractor shall purchase and maintain the required insurance from an insurance company or insurance companies lawfully authorized to issue insurance in the jurisdiction where the Project is located. The Owner, Architect, and Architect's consultants shall be named as additional insureds under the Contractor's commercial general liability policy or as otherwise described in the Contract Documents.

§ 11.1.2 The Contractor shall provide surety bonds of the types, for such penal sums, and subject to such terms and conditions as required by the Contract Documents. The Contractor shall purchase and maintain the required bonds from a company or companies lawfully authorized to issue surety bonds in the jurisdiction where the Project is located.

§ 11.1.3 Upon the request of any person or entity appearing to be a potential beneficiary of bonds covering payment of obligations arising under the Contract, the Contractor shall promptly furnish a copy of the bonds or shall authorize a copy to be furnished.

§ 11.1.4 Notice of Cancellation or Expiration of Contractor's Required Insurance. Within three (3) business days of the date the Contractor becomes aware of an impending or actual cancellation or expiration of any insurance required by the Contract Documents, the Contractor shall provide notice to the Owner of such impending or actual cancellation or

Init.
/
AIA Document A201® – 2017. Copyright © 1911, 1915, 1918, 1925, 1937, 1951, 1958, 1961, 1963, 1966, 1970, 1976, 1987, 1997, 2007 and 2017 by The American Institute of Architects. All rights reserved. The "American Institute of Architects," "AIA," the AIA Logo, "A201," and "AIA Contract Documents" are registered trademarks and may not be used without permission. This document was produced by AIA software at 11:45:22 ET on 02/16/2021 under Order No.6324187910 which expires on 02/16/2022, is not for resale, is licensed for one-time use only, and may only be used in accordance with the AIA Contract Documents® Terms of Service. To report copyright violations, e-mail copyright@aia.org.
User Notes: (1697986356)

expiration. Upon receipt of notice from the Contractor, the Owner shall, unless the lapse in coverage arises from an act or omission of the Owner, have the right to stop the Work until the lapse in coverage has been cured by the procurement of replacement coverage by the Contractor. The furnishing of notice by the Contractor shall not relieve the Contractor of any contractual obligation to provide any required coverage.

§ 11.2 Owner's Insurance

§ 11.2.1 The Owner shall purchase and maintain insurance of the types and limits of liability, containing the endorsements, and subject to the terms and conditions, as described in the Agreement or elsewhere in the Contract Documents. The Owner shall purchase and maintain the required insurance from an insurance company or insurance companies lawfully authorized to issue insurance in the jurisdiction where the Project is located.

§ 11.2.2 Failure to Purchase Required Property Insurance. If the Owner fails to purchase and maintain the required property insurance, with all of the coverages and in the amounts described in the Agreement or elsewhere in the Contract Documents, the Owner shall inform the Contractor in writing prior to commencement of the Work. Upon receipt of notice from the Owner, the Contractor may delay commencement of the Work and may obtain insurance that will protect the interests of the Contractor, Subcontractors, and Sub-Subcontractors in the Work. When the failure to provide coverage has been cured or resolved, the Contract Sum and Contract Time shall be equitably adjusted. In the event the Owner fails to procure coverage, the Owner waives all rights against the Contractor, Subcontractors, and Sub-subcontractors to the extent the loss to the Owner would have been covered by the insurance to have been procured by the Owner. The cost of the insurance shall be charged to the Owner by a Change Order. If the Owner does not provide written notice, and the Contractor is damaged by the failure or neglect of the Owner to purchase or maintain the required insurance, the Owner shall reimburse the Contractor for all reasonable costs and damages attributable thereto.

§ 11.2.3 Notice of Cancellation or Expiration of Owner's Required Property Insurance. Within three (3) business days of the date the Owner becomes aware of an impending or actual cancellation or expiration of any property insurance required by the Contract Documents, the Owner shall provide notice to the Contractor of such impending or actual cancellation or expiration. Unless the lapse in coverage arises from an act or omission of the Contractor: (1) the Contractor, upon receipt of notice from the Owner, shall have the right to stop the Work until the lapse in coverage has been cured by the procurement of replacement coverage by either the Owner or the Contractor; (2) the Contract Time and Contract Sum shall be equitably adjusted; and (3) the Owner waives all rights against the Contractor, Subcontractors, and Sub-subcontractors to the extent any loss to the Owner would have been covered by the insurance had it not expired or been cancelled. If the Contractor purchases replacement coverage, the cost of the insurance shall be charged to the Owner by an appropriate Change Order. The furnishing of notice by the Owner shall not relieve the Owner of any contractual obligation to provide required insurance.

§ 11.3 Waivers of Subrogation

§ 11.3.1 The Owner and Contractor waive all rights against (1) each other and any of their subcontractors, sub-subcontractors, agents, and employees, each of the other; (2) the Architect and Architect's consultants; and (3) Separate Contractors, if any, and any of their subcontractors, sub-subcontractors, agents, and employees, for damages caused by fire, or other causes of loss, to the extent those losses are covered by property insurance required by the Agreement or other property insurance applicable to the Project, except such rights as they have to proceeds of such insurance. The Owner or Contractor, as appropriate, shall require similar written waivers in favor of the individuals and entities identified above from the Architect, Architect's consultants, Separate Contractors, subcontractors, and sub-subcontractors. The policies of insurance purchased and maintained by each person or entity agreeing to waive claims pursuant to this section 11.3.1 shall not prohibit this waiver of subrogation. This waiver of subrogation shall be effective as to a person or entity (1) even though that person or entity would otherwise have a duty of indemnification, contractual or otherwise, (2) even though that person or entity did not pay the insurance premium directly or indirectly, or (3) whether or not the person or entity had an insurable interest in the damaged property.

§ 11.3.2 If during the Project construction period the Owner insures properties, real or personal or both, at or adjacent to the site by property insurance under policies separate from those insuring the Project, or if after final payment property insurance is to be provided on the completed Project through a policy or policies other than those insuring the Project during the construction period, to the extent permissible by such policies, the Owner waives all rights in accordance with the terms of Section 11.3.1 for damages caused by fire or other causes of loss covered by this separate property insurance.

Init.
/
AIA Document A201® – 2017. Copyright © 1911, 1915, 1918, 1925, 1937, 1951, 1958, 1961, 1963, 1966, 1970, 1976, 1987, 1997, 2007 and 2017 by The American Institute of Architects. All rights reserved. The "American Institute of Architects," "AIA," the AIA Logo, "A201," and "AIA Contract Documents" are registered trademarks and may not be used without permission. This document was produced by AIA software at 11:45:22 ET on 02/16/2021 under Order No.6324187910 which expires on 02/16/2022, is not for resale, is licensed for one-time use only, and may only be used in accordance with the AIA Contract Documents® Terms of Service. To report copyright violations, e-mail copyright@aia.org.
User Notes: (1697986356)

§ 11.4 Loss of Use, Business Interruption, and Delay in Completion Insurance
The Owner, at the Owner's option, may purchase and maintain insurance that will protect the Owner against loss of use of the Owner's property, or the inability to conduct normal operations, due to fire or other causes of loss. The Owner waives all rights of action against the Contractor and Architect for loss of use of the Owner's property, due to fire or other hazards however caused.

§11.5 Adjustment and Settlement of Insured Loss
§ 11.5.1 A loss insured under the property insurance required by the Agreement shall be adjusted by the Owner as fiduciary and made payable to the Owner as fiduciary for the insureds, as their interests may appear, subject to requirements of any applicable mortgagee clause and of Section 11.5.2. The Owner shall pay the Architect and Contractor their just shares of insurance proceeds received by the Owner, and by appropriate agreements the Architect and Contractor shall make payments to their consultants and Subcontractors in similar manner.

§ 11.5.2 Prior to settlement of an insured loss, the Owner shall notify the Contractor of the terms of the proposed settlement as well as the proposed allocation of the insurance proceeds. The Contractor shall have 14 days from receipt of notice to object to the proposed settlement or allocation of the proceeds. If the Contractor does not object, the Owner shall settle the loss and the Contractor shall be bound by the settlement and allocation. Upon receipt, the Owner shall deposit the insurance proceeds in a separate account and make the appropriate distributions. Thereafter, if no other agreement is made or the Owner does not terminate the Contract for convenience, the Owner and Contractor shall execute a Change Order for reconstruction of the damaged or destroyed Work in the amount allocated for that purpose. If the Contractor timely objects to either the terms of the proposed settlement or the allocation of the proceeds, the Owner may proceed to settle the insured loss, and any dispute between the Owner and Contractor arising out of the settlement or allocation of the proceeds shall be resolved pursuant to Article 15. Pending resolution of any dispute, the Owner may issue a Construction Change Directive for the reconstruction of the damaged or destroyed Work.

ARTICLE 12 UNCOVERING AND CORRECTION OF WORK

§ 12.1 Uncovering of Work
§ 12.1.1 If a portion of the Work is covered contrary to the Architect's request or to requirements specifically expressed in the Contract Documents, it must, if requested in writing by the Architect, be uncovered for the Architect's examination and be replaced at the Contractor's expense without change in the Contract Time.

§ 12.1.2 If a portion of the Work has been covered that the Architect has not specifically requested to examine prior to its being covered, the Architect may request to see such Work and it shall be uncovered by the Contractor. If such Work is in accordance with the Contract Documents, the Contractor shall be entitled to an equitable adjustment to the Contract Sum and Contract Time as may be appropriate. If such Work is not in accordance with the Contract Documents, the costs of uncovering the Work, and the cost of correction, shall be at the Contractor's expense.

§ 12.2 Correction of Work
§ 12.2.1 Before Substantial Completion
The Contractor shall promptly correct Work rejected by the Architect or failing to conform to the requirements of the Contract Documents, discovered before Substantial Completion and whether or not fabricated, installed or completed. Costs of correcting such rejected Work, including additional testing and inspections, the cost of uncovering and replacement, and compensation for the Architect's services and expenses made necessary thereby, shall be at the Contractor's expense.

§ 12.2.2 After Substantial Completion
§ 12.2.2.1 In addition to the Contractor's obligations under Section 3.5, if, within one year after the date of Substantial Completion of the Work or designated portion thereof or after the date for commencement of warranties established under Section 9.9.1, or by terms of any applicable special warranty required by the Contract Documents, any of the Work is found to be not in accordance with the requirements of the Contract Documents, the Contractor shall correct it promptly after receipt of notice from the Owner to do so, unless the Owner has previously given the Contractor a written acceptance of such condition. The Owner shall give such notice promptly after discovery of the condition. During the one-year period for correction of Work, if the Owner fails to notify the Contractor and give the Contractor an opportunity to make the correction, the Owner waives the rights to require correction by the Contractor and to make a claim for breach of warranty. If the Contractor fails to correct nonconforming Work within a reasonable time during

AIA Document A201® – 2017. Copyright © 1911, 1915, 1918, 1925, 1937, 1951, 1958, 1961, 1963, 1966, 1970, 1976, 1987, 1997, 2007 and 2017 by The American Institute of Architects. All rights reserved. The "American Institute of Architects," "AIA," the AIA Logo, "A201," and "AIA Contract Documents" are registered trademarks and may not be used without permission. This document was produced by AIA software at 11:45:22 ET on 02/16/2021 under Order No.6324187910 which expires on 02/16/2022, is not for resale, is licensed for one-time use only, and may only be used in accordance with the AIA Contract Documents® Terms of Service. To report copyright violations, e-mail copyright@aia.org.
User Notes: (1697986356)

that period after receipt of notice from the Owner or Architect, the Owner may correct it in accordance with Section 2.5.

§ 12.2.2.2 The one-year period for correction of Work shall be extended with respect to portions of Work first performed after Substantial Completion by the period of time between Substantial Completion and the actual completion of that portion of the Work.

§ 12.2.2.3 The one-year period for correction of Work shall not be extended by corrective Work performed by the Contractor pursuant to this Section 12.2.

§ 12.2.3 The Contractor shall remove from the site portions of the Work that are not in accordance with the requirements of the Contract Documents and are neither corrected by the Contractor nor accepted by the Owner.

§ 12.2.4 The Contractor shall bear the cost of correcting destroyed or damaged construction of the Owner or Separate Contractors, whether completed or partially completed, caused by the Contractor's correction or removal of Work that is not in accordance with the requirements of the Contract Documents.

§ 12.2.5 Nothing contained in this Section 12.2 shall be construed to establish a period of limitation with respect to other obligations the Contractor has under the Contract Documents. Establishment of the one-year period for correction of Work as described in Section 12.2.2 relates only to the specific obligation of the Contractor to correct the Work, and has no relationship to the time within which the obligation to comply with the Contract Documents may be sought to be enforced, nor to the time within which proceedings may be commenced to establish the Contractor's liability with respect to the Contractor's obligations other than specifically to correct the Work.

§ 12.3 Acceptance of Nonconforming Work

If the Owner prefers to accept Work that is not in accordance with the requirements of the Contract Documents, the Owner may do so instead of requiring its removal and correction, in which case the Contract Sum will be reduced as appropriate and equitable. Such adjustment shall be effected whether or not final payment has been made.

ARTICLE 13 MISCELLANEOUS PROVISIONS

§ 13.1 Governing Law

The Contract shall be governed by the law of the place where the Project is located, excluding that jurisdiction's choice of law rules. If the parties have selected arbitration as the method of binding dispute resolution, the Federal Arbitration Act shall govern Section 15.4.

§ 13.2 Successors and Assigns

§ 13.2.1 The Owner and Contractor respectively bind themselves, their partners, successors, assigns, and legal representatives to covenants, agreements, and obligations contained in the Contract Documents. Except as provided in Section 13.2.2, neither party to the Contract shall assign the Contract as a whole without written consent of the other. If either party attempts to make an assignment without such consent, that party shall nevertheless remain legally responsible for all obligations under the Contract.

§ 13.2.2 The Owner may, without consent of the Contractor, assign the Contract to a lender providing construction financing for the Project, if the lender assumes the Owner's rights and obligations under the Contract Documents. The Contractor shall execute all consents reasonably required to facilitate the assignment.

§ 13.3 Rights and Remedies

§ 13.3.1 Duties and obligations imposed by the Contract Documents and rights and remedies available thereunder shall be in addition to and not a limitation of duties, obligations, rights, and remedies otherwise imposed or available by law.

§ 13.3.2 No action or failure to act by the Owner, Architect, or Contractor shall constitute a waiver of a right or duty afforded them under the Contract, nor shall such action or failure to act constitute approval of or acquiescence in a breach thereunder, except as may be specifically agreed upon in writing.

Init.
/

AIA Document A201® – 2017. Copyright © 1911, 1915, 1918, 1925, 1937, 1951, 1958, 1961, 1963, 1966, 1970, 1976, 1987, 1997, 2007 and 2017 by The American Institute of Architects. All rights reserved. The "American Institute of Architects," "AIA," the AIA Logo, "A201," and "AIA Contract Documents" are registered trademarks and may not be used without permission. This document was produced by AIA software at 11:45:22 ET on 02/16/2021 under Order No.6324187910 which expires on 02/16/2022, is not for resale, is licensed for one-time use only, and may only be used in accordance with the AIA Contract Documents® Terms of Service. To report copyright violations, e-mail copyright@aia.org.
User Notes: (1697986356)

§ 13.4 Tests and Inspections

§ 13.4.1 Tests, inspections, and approvals of portions of the Work shall be made as required by the Contract Documents and by applicable laws, statutes, ordinances, codes, rules, and regulations or lawful orders of public authorities. Unless otherwise provided, the Contractor shall make arrangements for such tests, inspections, and approvals with an independent testing laboratory or entity acceptable to the Owner, or with the appropriate public authority, and shall bear all related costs of tests, inspections, and approvals. The Contractor shall give the Architect timely notice of when and where tests and inspections are to be made so that the Architect may be present for such procedures. The Owner shall bear costs of tests, inspections, or approvals that do not become requirements until after bids are received or negotiations concluded. The Owner shall directly arrange and pay for tests, inspections, or approvals where building codes or applicable laws or regulations so require.

§ 13.4.2 If the Architect, Owner, or public authorities having jurisdiction determine that portions of the Work require additional testing, inspection, or approval not included under Section 13.4.1, the Architect will, upon written authorization from the Owner, instruct the Contractor to make arrangements for such additional testing, inspection, or approval, by an entity acceptable to the Owner, and the Contractor shall give timely notice to the Architect of when and where tests and inspections are to be made so that the Architect may be present for such procedures. Such costs, except as provided in Section 13.4.3, shall be at the Owner's expense.

§ 13.4.3 If procedures for testing, inspection, or approval under Sections 13.4.1 and 13.4.2 reveal failure of the portions of the Work to comply with requirements established by the Contract Documents, all costs made necessary by such failure, including those of repeated procedures and compensation for the Architect's services and expenses, shall be at the Contractor's expense.

§ 13.4.4 Required certificates of testing, inspection, or approval shall, unless otherwise required by the Contract Documents, be secured by the Contractor and promptly delivered to the Architect.

§ 13.4.5 If the Architect is to observe tests, inspections, or approvals required by the Contract Documents, the Architect will do so promptly and, where practicable, at the normal place of testing.

§ 13.4.6 Tests or inspections conducted pursuant to the Contract Documents shall be made promptly to avoid unreasonable delay in the Work.

§ 13.5 Interest

Payments due and unpaid under the Contract Documents shall bear interest from the date payment is due at the rate the parties agree upon in writing or, in the absence thereof, at the legal rate prevailing from time to time at the place where the Project is located.

ARTICLE 14 TERMINATION OR SUSPENSION OF THE CONTRACT

§ 14.1 Termination by the Contractor

§ 14.1.1 The Contractor may terminate the Contract if the Work is stopped for a period of 30 consecutive days through no act or fault of the Contractor, a Subcontractor, a Sub-subcontractor, their agents or employees, or any other persons or entities performing portions of the Work, for any of the following reasons:

.1 Issuance of an order of a court or other public authority having jurisdiction that requires all Work to be stopped;

.2 An act of government, such as a declaration of national emergency, that requires all Work to be stopped;

.3 Because the Architect has not issued a Certificate for Payment and has not notified the Contractor of the reason for withholding certification as provided in Section 9.4.1, or because the Owner has not made payment on a Certificate for Payment within the time stated in the Contract Documents; or

.4 The Owner has failed to furnish to the Contractor reasonable evidence as required by Section 2.2.

§ 14.1.2 The Contractor may terminate the Contract if, through no act or fault of the Contractor, a Subcontractor, a Sub-subcontractor, their agents or employees, or any other persons or entities performing portions of the Work, repeated suspensions, delays, or interruptions of the entire Work by the Owner as described in Section 14.3, constitute in the aggregate more than 100 percent of the total number of days scheduled for completion, or 120 days in any 365-day period, whichever is less.

AIA Document A201® – 2017. Copyright © 1911, 1915, 1918, 1925, 1937, 1951, 1958, 1961, 1963, 1966, 1970, 1976, 1987, 1997, 2007 and 2017 by The American Institute of Architects. All rights reserved. The "American Institute of Architects," "AIA," the AIA Logo, "A201," and "AIA Contract Documents" are registered trademarks and may not be used without permission. This document was produced by AIA software at 11:45:22 ET on 02/16/2021 under Order No.6324187910 which expires on 02/16/2022, is not for resale, is licensed for one-time use only, and may only be used in accordance with the AIA Contract Documents® Terms of Service. To report copyright violations, e-mail copyright@aia.org.
User Notes:
(1697986356)

§ 14.1.3 If one of the reasons described in Section 14.1.1 or 14.1.2 exists, the Contractor may, upon seven days' notice to the Owner and Architect, terminate the Contract and recover from the Owner payment for Work executed, as well as reasonable overhead and profit on Work not executed, and costs incurred by reason of such termination.

§ 14.1.4 If the Work is stopped for a period of 60 consecutive days through no act or fault of the Contractor, a Subcontractor, a Sub-subcontractor, or their agents or employees or any other persons or entities performing portions of the Work because the Owner has repeatedly failed to fulfill the Owner's obligations under the Contract Documents with respect to matters important to the progress of the Work, the Contractor may, upon seven additional days' notice to the Owner and the Architect, terminate the Contract and recover from the Owner as provided in Section 14.1.3.

§ 14.2 Termination by the Owner for Cause

§ 14.2.1 The Owner may terminate the Contract if the Contractor

- **.1** repeatedly refuses or fails to supply enough properly skilled workers or proper materials;
- **.2** fails to make payment to Subcontractors or suppliers in accordance with the respective agreements between the Contractor and the Subcontractors or suppliers;
- **.3** repeatedly disregards applicable laws, statutes, ordinances, codes, rules and regulations, or lawful orders of a public authority; or
- **.4** otherwise is guilty of substantial breach of a provision of the Contract Documents.

§ 14.2.2 When any of the reasons described in Section 14.2.1 exist, and upon certification by the Architect that sufficient cause exists to justify such action, the Owner may, without prejudice to any other rights or remedies of the Owner and after giving the Contractor and the Contractor's surety, if any, seven days' notice, terminate employment of the Contractor and may, subject to any prior rights of the surety:

- **.1** Exclude the Contractor from the site and take possession of all materials, equipment, tools, and construction equipment and machinery thereon owned by the Contractor;
- **.2** Accept assignment of subcontracts pursuant to Section 5.4; and
- **.3** Finish the Work by whatever reasonable method the Owner may deem expedient. Upon written request of the Contractor, the Owner shall furnish to the Contractor a detailed accounting of the costs incurred by the Owner in finishing the Work.

§ 14.2.3 When the Owner terminates the Contract for one of the reasons stated in Section 14.2.1, the Contractor shall not be entitled to receive further payment until the Work is finished.

§ 14.2.4 If the unpaid balance of the Contract Sum exceeds costs of finishing the Work, including compensation for the Architect's services and expenses made necessary thereby, and other damages incurred by the Owner and not expressly waived, such excess shall be paid to the Contractor. If such costs and damages exceed the unpaid balance, the Contractor shall pay the difference to the Owner. The amount to be paid to the Contractor or Owner, as the case may be, shall be certified by the Initial Decision Maker, upon application, and this obligation for payment shall survive termination of the Contract.

§ 14.3 Suspension by the Owner for Convenience

§ 14.3.1 The Owner may, without cause, order the Contractor in writing to suspend, delay or interrupt the Work, in whole or in part for such period of time as the Owner may determine.

§ 14.3.2 The Contract Sum and Contract Time shall be adjusted for increases in the cost and time caused by suspension, delay, or interruption under Section 14.3.1. Adjustment of the Contract Sum shall include profit. No adjustment shall be made to the extent

- **.1** that performance is, was, or would have been, so suspended, delayed, or interrupted, by another cause for which the Contractor is responsible; or
- **.2** that an equitable adjustment is made or denied under another provision of the Contract.

§ 14.4 Termination by the Owner for Convenience

§ 14.4.1 The Owner may, at any time, terminate the Contract for the Owner's convenience and without cause.

§ 14.4.2 Upon receipt of notice from the Owner of such termination for the Owner's convenience, the Contractor shall

- **.1** cease operations as directed by the Owner in the notice;

Init.
/
AIA Document A201® – 2017. Copyright © 1911, 1915, 1918, 1925, 1937, 1951, 1958, 1961, 1963, 1966, 1970, 1976, 1987, 1997, 2007 and 2017 by The American Institute of Architects. All rights reserved. The "American Institute of Architects," "AIA," the AIA Logo, "A201" and "AIA Contract Documents" are registered trademarks and may not be used without permission. This document was produced by AIA software at 11:45:22 ET on 02/16/2021 under Order No.6324187910 which expires on 02/16/2022, is not for resale, is licensed for one-time use only, and may only be used in accordance with the AIA Contract Documents® Terms of Service. To report copyright violations, e-mail copyright@aia.org.
User Notes: (1697986356)

.2 take actions necessary, or that the Owner may direct, for the protection and preservation of the Work; and

.3 except for Work directed to be performed prior to the effective date of termination stated in the notice, terminate all existing subcontracts and purchase orders and enter into no further subcontracts and purchase orders.

§ 14.4.3 In case of such termination for the Owner's convenience, the Owner shall pay the Contractor for Work properly executed; costs incurred by reason of the termination, including costs attributable to termination of Subcontracts; and the termination fee, if any, set forth in the Agreement.

ARTICLE 15 CLAIMS AND DISPUTES

§ 15.1 Claims

§ 15.1.1 Definition

A Claim is a demand or assertion by one of the parties seeking, as a matter of right, payment of money, a change in the Contract Time, or other relief with respect to the terms of the Contract. The term "Claim" also includes other disputes and matters in question between the Owner and Contractor arising out of or relating to the Contract. The responsibility to substantiate Claims shall rest with the party making the Claim. This Section 15.1.1 does not require the Owner to file a Claim in order to impose liquidated damages in accordance with the Contract Documents.

§ 15.1.2 Time Limits on Claims

The Owner and Contractor shall commence all Claims and causes of action against the other and arising out of or related to the Contract, whether in contract, tort, breach of warranty or otherwise, in accordance with the requirements of the binding dispute resolution method selected in the Agreement and within the period specified by applicable law, but in any case not more than 10 years after the date of Substantial Completion of the Work. The Owner and Contractor waive all Claims and causes of action not commenced in accordance with this Section 15.1.2.

§ 15.1.3 Notice of Claims

§ 15.1.3.1 Claims by either the Owner or Contractor, where the condition giving rise to the Claim is first discovered prior to expiration of the period for correction of the Work set forth in Section 12.2.2, shall be initiated by notice to the other party and to the Initial Decision Maker with a copy sent to the Architect, if the Architect is not serving as the Initial Decision Maker. Claims by either party under this Section 15.1.3.1 shall be initiated within 21 days after occurrence of the event giving rise to such Claim or within 21 days after the claimant first recognizes the condition giving rise to the Claim, whichever is later.

§ 15.1.3.2 Claims by either the Owner or Contractor, where the condition giving rise to the Claim is first discovered after expiration of the period for correction of the Work set forth in Section 12.2.2, shall be initiated by notice to the other party. In such event, no decision by the Initial Decision Maker is required.

§ 15.1.4 Continuing Contract Performance

§ 15.1.4.1 Pending final resolution of a Claim, except as otherwise agreed in writing or as provided in Section 9.7 and Article 14, the Contractor shall proceed diligently with performance of the Contract and the Owner shall continue to make payments in accordance with the Contract Documents.

§ 15.1.4.2 The Contract Sum and Contract Time shall be adjusted in accordance with the Initial Decision Maker's decision, subject to the right of either party to proceed in accordance with this Article 15. The Architect will issue Certificates for Payment in accordance with the decision of the Initial Decision Maker.

§ 15.1.5 Claims for Additional Cost

If the Contractor wishes to make a Claim for an increase in the Contract Sum, notice as provided in Section 15.1.3 shall be given before proceeding to execute the portion of the Work that is the subject of the Claim. Prior notice is not required for Claims relating to an emergency endangering life or property arising under Section 10.4.

§ 15.1.6 Claims for Additional Time

§ 15.1.6.1 If the Contractor wishes to make a Claim for an increase in the Contract Time, notice as provided in Section 15.1.3 shall be given. The Contractor's Claim shall include an estimate of cost and of probable effect of delay on progress of the Work. In the case of a continuing delay, only one Claim is necessary.

Init.
/

AIA Document A201® – 2017. Copyright © 1911, 1915, 1918, 1925, 1937, 1951, 1958, 1961, 1963, 1966, 1970, 1976, 1987, 1997, 2007 and 2017 by The American Institute of Architects. All rights reserved. The "American Institute of Architects," "AIA," the AIA Logo, "A201," and "AIA Contract Documents" are registered trademarks and may not be used without permission. This document was produced by AIA software at 11:45:22 ET on 02/16/2021 under Order No.6324187910 which expires on 02/16/2022, is not for resale, is licensed for one-time use only, and may only be used in accordance with the AIA Contract Documents® Terms of Service. To report copyright violations, e-mail copyright@aia.org.
User Notes: (1697986356)

§ 15.1.6.2 If adverse weather conditions are the basis for a Claim for additional time, such Claim shall be documented by data substantiating that weather conditions were abnormal for the period of time, could not have been reasonably anticipated, and had an adverse effect on the scheduled construction.

§ 15.1.7 Waiver of Claims for Consequential Damages

The Contractor and Owner waive Claims against each other for consequential damages arising out of or relating to this Contract. This mutual waiver includes

.1 damages incurred by the Owner for rental expenses, for losses of use, income, profit, financing, business and reputation, and for loss of management or employee productivity or of the services of such persons; and

.2 damages incurred by the Contractor for principal office expenses including the compensation of personnel stationed there, for losses of financing, business and reputation, and for loss of profit, except anticipated profit arising directly from the Work.

This mutual waiver is applicable, without limitation, to all consequential damages due to either party's termination in accordance with Article 14. Nothing contained in this Section 15.1.7 shall be deemed to preclude assessment of liquidated damages, when applicable, in accordance with the requirements of the Contract Documents.

§ 15.2 Initial Decision

§ 15.2.1 Claims, excluding those where the condition giving rise to the Claim is first discovered after expiration of the period for correction of the Work set forth in Section 12.2.2 or arising under Sections 10.3, 10.4, and 11.5, shall be referred to the Initial Decision Maker for initial decision. The Architect will serve as the Initial Decision Maker, unless otherwise indicated in the Agreement. Except for those Claims excluded by this Section 15.2.1, an initial decision shall be required as a condition precedent to mediation of any Claim. If an initial decision has not been rendered within 30 days after the Claim has been referred to the Initial Decision Maker, the party asserting the Claim may demand mediation and binding dispute resolution without a decision having been rendered. Unless the Initial Decision Maker and all affected parties agree, the Initial Decision Maker will not decide disputes between the Contractor and persons or entities other than the Owner.

§ 15.2.2 The Initial Decision Maker will review Claims and within ten days of the receipt of a Claim take one or more of the following actions: (1) request additional supporting data from the claimant or a response with supporting data from the other party, (2) reject the Claim in whole or in part, (3) approve the Claim, (4) suggest a compromise, or (5) advise the parties that the Initial Decision Maker is unable to resolve the Claim if the Initial Decision Maker lacks sufficient information to evaluate the merits of the Claim or if the Initial Decision Maker concludes that, in the Initial Decision Maker's sole discretion, it would be inappropriate for the Initial Decision Maker to resolve the Claim.

§ 15.2.3 In evaluating Claims, the Initial Decision Maker may, but shall not be obligated to, consult with or seek information from either party or from persons with special knowledge or expertise who may assist the Initial Decision Maker in rendering a decision. The Initial Decision Maker may request the Owner to authorize retention of such persons at the Owner's expense.

§ 15.2.4 If the Initial Decision Maker requests a party to provide a response to a Claim or to furnish additional supporting data, such party shall respond, within ten days after receipt of the request, and shall either (1) provide a response on the requested supporting data, (2) advise the Initial Decision Maker when the response or supporting data will be furnished, or (3) advise the Initial Decision Maker that no supporting data will be furnished. Upon receipt of the response or supporting data, if any, the Initial Decision Maker will either reject or approve the Claim in whole or in part.

§ 15.2.5 The Initial Decision Maker will render an initial decision approving or rejecting the Claim, or indicating that the Initial Decision Maker is unable to resolve the Claim. This initial decision shall (1) be in writing; (2) state the reasons therefor; and (3) notify the parties and the Architect, if the Architect is not serving as the Initial Decision Maker, of any change in the Contract Sum or Contract Time or both. The initial decision shall be final and binding on the parties but subject to mediation and, if the parties fail to resolve their dispute through mediation, to binding dispute resolution.

§ 15.2.6 Either party may file for mediation of an initial decision at any time, subject to the terms of Section 15.2.6.1.

Init.
/

AIA Document A201® – 2017. Copyright © 1911, 1915, 1918, 1925, 1937, 1951, 1958, 1961, 1963, 1966, 1970, 1976, 1987, 1997, 2007 and 2017 by The American Institute of Architects. All rights reserved. The "American Institute of Architects," "AIA," the AIA Logo, "A201," and "AIA Contract Documents" are registered trademarks and may not be used without permission. This document was produced by AIA software at 11:45:22 ET on 02/16/2021 under Order No.6324187910 which expires on 02/16/2022, is not for resale, is licensed for one-time use only, and may only be used in accordance with the AIA Contract Documents® Terms of Service. To report copyright violations, e-mail copyright@aia.org.
User Notes: (1697986356)

§ 15.2.6.1 Either party may, within 30 days from the date of receipt of an initial decision, demand in writing that the other party file for mediation. If such a demand is made and the party receiving the demand fails to file for mediation within 30 days after receipt thereof, then both parties waive their rights to mediate or pursue binding dispute resolution proceedings with respect to the initial decision.

§ 15.2.7 In the event of a Claim against the Contractor, the Owner may, but is not obligated to, notify the surety, if any, of the nature and amount of the Claim. If the Claim relates to a possibility of a Contractor's default, the Owner may, but is not obligated to, notify the surety and request the surety's assistance in resolving the controversy.

§ 15.2.8 If a Claim relates to or is the subject of a mechanic's lien, the party asserting such Claim may proceed in accordance with applicable law to comply with the lien notice or filing deadlines.

§ 15.3 Mediation

§ 15.3.1 Claims, disputes, or other matters in controversy arising out of or related to the Contract, except those waived as provided for in Sections 9.10.4, 9.10.5, and 15.1.7, shall be subject to mediation as a condition precedent to binding dispute resolution.

§ 15.3.2 The parties shall endeavor to resolve their Claims by mediation which, unless the parties mutually agree otherwise, shall be administered by the American Arbitration Association in accordance with its Construction Industry Mediation Procedures in effect on the date of the Agreement. A request for mediation shall be made in writing, delivered to the other party to the Contract, and filed with the person or entity administering the mediation. The request may be made concurrently with the filing of binding dispute resolution proceedings but, in such event, mediation shall proceed in advance of binding dispute resolution proceedings, which shall be stayed pending mediation for a period of 60 days from the date of filing, unless stayed for a longer period by agreement of the parties or court order. If an arbitration is stayed pursuant to this Section 15.3.2, the parties may nonetheless proceed to the selection of the arbitrator(s) and agree upon a schedule for later proceedings.

§ 15.3.3 Either party may, within 30 days from the date that mediation has been concluded without resolution of the dispute or 60 days after mediation has been demanded without resolution of the dispute, demand in writing that the other party file for binding dispute resolution. If such a demand is made and the party receiving the demand fails to file for binding dispute resolution within 60 days after receipt thereof, then both parties waive their rights to binding dispute resolution proceedings with respect to the initial decision.

§ 15.3.4 The parties shall share the mediator's fee and any filing fees equally. The mediation shall be held in the place where the Project is located, unless another location is mutually agreed upon. Agreements reached in mediation shall be enforceable as settlement agreements in any court having jurisdiction thereof.

§ 15.4 Arbitration

§ 15.4.1 If the parties have selected arbitration as the method for binding dispute resolution in the Agreement, any Claim subject to, but not resolved by, mediation shall be subject to arbitration which, unless the parties mutually agree otherwise, shall be administered by the American Arbitration Association in accordance with its Construction Industry Arbitration Rules in effect on the date of the Agreement. The Arbitration shall be conducted in the place where the Project is located, unless another location is mutually agreed upon. A demand for arbitration shall be made in writing, delivered to the other party to the Contract, and filed with the person or entity administering the arbitration. The party filing a notice of demand for arbitration must assert in the demand all Claims then known to that party on which arbitration is permitted to be demanded.

§ 15.4.1.1 A demand for arbitration shall be made no earlier than concurrently with the filing of a request for mediation, but in no event shall it be made after the date when the institution of legal or equitable proceedings based on the Claim would be barred by the applicable statute of limitations. For statute of limitations purposes, receipt of a written demand for arbitration by the person or entity administering the arbitration shall constitute the institution of legal or equitable proceedings based on the Claim.

§ 15.4.2 The award rendered by the arbitrator or arbitrators shall be final, and judgment may be entered upon it in accordance with applicable law in any court having jurisdiction thereof.

AIA Document A201® – 2017. Copyright © 1911, 1915, 1918, 1925, 1937, 1951, 1958, 1961, 1963, 1966, 1970, 1976, 1987, 1997, 2007 and 2017 by The American Institute of Architects. All rights reserved. The "American Institute of Architects," "AIA," the AIA Logo, "A201," and "AIA Contract Documents" are registered trademarks and may not be used without permission. This document was produced by AIA software at 11:45:22 ET on 02/16/2021 under Order No.6324187910 which expires on 02/16/2022, is not for resale, is licensed for one-time use only, and may only be used in accordance with the AIA Contract Documents® Terms of Service. To report copyright violations, e-mail copyright@aia.org.
User Notes: (1697986356)

§ 15.4.3 The foregoing agreement to arbitrate and other agreements to arbitrate with an additional person or entity duly consented to by parties to the Agreement, shall be specifically enforceable under applicable law in any court having jurisdiction thereof.

§ 15.4.4 Consolidation or Joinder

§ 15.4.4.1 Subject to the rules of the American Arbitration Association or other applicable arbitration rules, either party may consolidate an arbitration conducted under this Agreement with any other arbitration to which it is a party provided that (1) the arbitration agreement governing the other arbitration permits consolidation, (2) the arbitrations to be consolidated substantially involve common questions of law or fact, and (3) the arbitrations employ materially similar procedural rules and methods for selecting arbitrator(s).

§ 15.4.4.2 Subject to the rules of the American Arbitration Association or other applicable arbitration rules, either party may include by joinder persons or entities substantially involved in a common question of law or fact whose presence is required if complete relief is to be accorded in arbitration, provided that the party sought to be joined consents in writing to such joinder. Consent to arbitration involving an additional person or entity shall not constitute consent to arbitration of any claim, dispute or other matter in question not described in the written consent.

§ 15.4.4.3 The Owner and Contractor grant to any person or entity made a party to an arbitration conducted under this Section 15.4, whether by joinder or consolidation, the same rights of joinder and consolidation as those of the Owner and Contractor under this Agreement.

AIA Document A201® – 2017. Copyright © 1911, 1915, 1918, 1925, 1937, 1951, 1958, 1961, 1963, 1966, 1970, 1976, 1987, 1997, 2007 and 2017 by The American Institute of Architects. All rights reserved. The "American Institute of Architects," "AIA," the AIA Logo, "A201," and "AIA Contract Documents" are registered trademarks and may not be used without permission. This document was produced by AIA software at 11:45:22 ET on 02/16/2021 under Order No.6324187910 which expires on 02/16/2022, is not for resale, is licensed for one-time use only, and may only be used in accordance with the AIA Contract Documents® Terms of Service. To report copyright violations, e-mail copyright@aia.org.
User Notes: (1697986356)

Additions and Deletions Report for
AIA® Document A201® – 2017

This Additions and Deletions Report, as defined on page 1 of the associated document, reproduces below all text the author has added to the standard form AIA document in order to complete it, as well as any text the author may have added to or deleted from the original AIA text. Added text is shown underlined. Deleted text is indicated with a horizontal line through the original AIA text.

Note: This Additions and Deletions Report is provided for information purposes only and is not incorporated into or constitute any part of the associated AIA document. This Additions and Deletions Report and its associated document were generated simultaneously by AIA software at 11:45:22 ET on 02/16/2021.

PAGE 1

Erie International Airport Passenger Boarding Bridge -Gate 3
Erie International Airport
Tom Ridge Field
4411 West 12th Street
Erie, Pennsylvania 16505

...

Erie Regional Airport Authority
4411 West 12th Street
Erie, Pennsylvania 16505

...

(Name, legal status and address)

Mr. Sean Thompson, PE
Mead & Hunt
2605 Port Lansing Road
Lansing, Michigan 48906

Additions and Deletions Report for AIA Document A201® – 2017. Copyright © 1911, 1915, 1918, 1925, 1937, 1951, 1958, 1961, 1963, 1966, 1970, 1976, 1987, 1997, 2007 and 2017 by The American Institute of Architects. All rights reserved. The "American Institute of Architects," "AIA," the AIA Logo, "A201," and "AIA Contract Documents" are registered trademarks and may not be used without permission. This document was produced by AIA software at 11:45:22 ET on 02/16/2021 under Order No.6324187910 which expires on 02/16/2022, is not for resale, is licensed for one-time use only, and may only be used in accordance with the AIA Contract Documents® Terms of Service. To report copyright violations, e-mail copyright@aia.org.
User Notes: (1697986356)

Certification of Document's Authenticity

AIA® Document D401™ – 2003

I, Sean Thompson, PE, hereby certify, to the best of my knowledge, information and belief, that I created the attached final document simultaneously with its associated Additions and Deletions Report and this certification at 11:45:22 ET on 02/16/2021 under Order No. 6324187910 from AIA Contract Documents software and that in preparing the attached final document I made no changes to the original text of AIA® Document A201™ – 2017, General Conditions of the Contract for Construction, as published by the AIA in its software, other than those additions and deletions shown in the associated Additions and Deletions Report.

_____

(Signed)

_____

(Title)

_____

(Dated)

AIA Document D401™ – 2003. Copyright © 1992 and 2003 by The American Institute of Architects. All rights reserved. The "American Institute of Architects," "AIA," the AIA Logo, and "AIA Contract Documents" are registered trademarks and may not be used without permission. This document was produced by AIA software at 11:45:22 ET on 02/16/2021 under Order No.6324187910 which expires on 02/16/2022, is not for resale, is licensed for one-time use only, and may only be used in accordance with the AIA Contract Documents® Terms of Service. To report copyright violations, e-mail copyright@aia.org.
User Notes: (1697986356)

GUIDELINES FOR CONTRACT PROVISIONS FOR OBLIGATED SPONSORS AND AIRPORT IMPROVEMENT PROGRAM PROJECTS

Issued on June 19, 2018

ACCESS TO RECORDS AND REPORTS

The Contractor must maintain an acceptable cost accounting system. The Contractor agrees to provide the Owner, the Federal Aviation Administration and the Comptroller General of the United States or any of their duly authorized representatives access to any books, documents, papers and records of the Contractor which are directly pertinent to the specific contract for the purpose of making audit, examination, excerpts and transcriptions. The Contractor agrees to maintain all books, records and reports required under this contract for a period of not less than three years after final payment is made and all pending matters are closed.

NOTICE OF REQUIREMENT FOR AFFIRMATIVE ACTION to ENSURE EQUAL EMPLOYMENT OPPORTUNITY

1. The Offeror's or Bidder's attention is called to the "Equal Opportunity Clause" and the "Standard Federal Equal Employment Opportunity Construction Contract Specifications" set forth herein.

2. The goals and timetables for minority and female participation, expressed in percentage terms for the Contractor's aggregate workforce in each trade on all construction work in the covered area, are as follows:

Timetables

Goals for minority participation for each trade: **2.8%**

Goals for female participation in each trade: **6.9%**

These goals are applicable to all of the Contractor's construction work (whether or not it is Federal or federally assisted) performed in the covered area. If the Contractor performs construction work in a geographical area located outside of the covered area, it shall apply the goals established for such geographical area where the work is actually performed. With regard to this second area, the Contractor also is subject to the goals for both its federally involved and non-federally involved construction.

The Contractor's compliance with the Executive Order and the regulations in 41 CFR Part 60-4 shall be based on its implementation of the Equal Opportunity Clause, specific affirmative action obligations required by the specifications set forth in 41 CFR 60-4.3(a) and its efforts to meet the goals. The hours of minority and female employment and training must be substantially uniform throughout the length of the contract, and in each trade, and the Contractor shall make a good faith effort to employ minorities and women evenly on each of its projects. The transfer of minority or female employees or trainees from Contractor to Contractor or from project to project for the sole purpose of meeting the Contractor's goals shall be a violation of the contract, the Executive Order and the regulations in 41 CFR Part 60-4. Compliance with the goals will be measured against the total work hours performed.

3. The Contractor shall provide written notification to the Director of the Office of Federal Contract Compliance Programs (OFCCP) within 10 working days of award of any construction subcontract in excess of $10,000 at any tier for construction work under the contract resulting from this solicitation. The notification shall list the name, address, and telephone number of the subcontractor; employer identification number of the subcontractor; estimated dollar amount of the subcontract; estimated starting and completion dates of the subcontract; and the geographical area in which the subcontract is to be performed.

4. As used in this notice and in the contract resulting from this solicitation, the "covered area" is **Pennsylvania, Erie County, Erie.**

BREACH OF CONTRACT TERMS

Any violation or breach of terms of this contract on the part of the Contractor or its subcontractors may result in the suspension or termination of this contract or such other action that may be necessary to enforce the rights of the parties of this agreement.

Owner will provide Contractor written notice that describes the nature of the breach and corrective actions the Contractor must undertake in order to avoid termination of the contract. Owner reserves the right to withhold payments to Contractor until such time the Contractor corrects the breach or the Owner elects to terminate the contract. The Owner's notice will identify a specific date by which the Contractor must correct the breach. Owner may proceed with termination of the contract if the Contractor fails to correct the breach by the deadline indicated in the Owner's notice.

The duties and obligations imposed by the Contract Documents and the rights and remedies available thereunder are in addition to, and not a limitation of, any duties, obligations, rights and remedies otherwise imposed or available by law.

GENERAL CIVIL RIGHTS PROVISIONS

The Contractor agrees to comply with pertinent statutes, Executive Orders and such rules as are promulgated to ensure that no person shall, on the grounds of race, creed, color, national origin, sex, age, or disability be excluded from participating in any activity conducted with or benefiting from Federal assistance.

This provision binds the Contractor and subcontractors from the bid solicitation period through the completion of the contract. This provision is in addition to that required by Title VI of the Civil Rights Act of 1964.

Title VI Solicitation Notice:

The **Erie Regional Airport Authority**, in accordance with the provisions of Title VI of the Civil Rights Act of 1964 (78 Stat. 252, 42 USC §§ 2000d to 2000d-4) and the Regulations, hereby notifies all bidders or offerors that it will affirmatively ensure that any contract entered into pursuant to this advertisement, disadvantaged business enterprises will be afforded full and fair opportunity to submit bids in response to this invitation and will not be discriminated against on the grounds of race, color, or national origin in consideration for an award.

Compliance with Nondiscrimination Requirements:

During the performance of this contract, the Contractor, for itself, its assignees, and successors in interest (hereinafter referred to as the "Contractor"), agrees as follows:

1. **Compliance with Regulations:** The Contractor (hereinafter includes consultants) will comply with the Title VI List of Pertinent Nondiscrimination Acts and Authorities, as they may be amended from time to time, which are herein incorporated by reference and made a part of this contract.
2. **Nondiscrimination:** The Contractor, with regard to the work performed by it during the contract, will not discriminate on the grounds of race, color, or national origin in the selection and retention of subcontractors, including procurements of materials and leases of equipment. The Contractor will not participate directly or indirectly in the discrimination prohibited by the Nondiscrimination Acts and Authorities, including employment practices when the contract covers any activity, project, or program set forth in Appendix B of 49 CFR part 21.
3. **Solicitations for Subcontracts, including Procurements of Materials and Equipment:** In all solicitations, either by competitive bidding or negotiation made by the Contractor for work to be performed under a subcontract, including procurements of materials, or leases of equipment, each potential subcontractor or supplier will be notified by the Contractor of the contractor's obligations under this contract and the Nondiscrimination Acts and Authorities on the grounds of race, color, or national origin.
4. **Information and Reports:** The Contractor will provide all information and reports required by the Acts, the Regulations, and directives issued pursuant thereto and will permit access to its books, records, accounts, other sources of information, and its facilities as may be determined by the sponsor or the Federal Aviation Administration to be pertinent to ascertain compliance with such Nondiscrimination Acts and Authorities and instructions. Where any information required of a contractor is in the exclusive possession of another who fails or refuses to furnish the information, the Contractor will so certify to the sponsor or the Federal Aviation Administration, as appropriate, and will set forth what efforts it has made to obtain the information.

5. **Sanctions for Noncompliance:** In the event of a Contractor's noncompliance with the non-discrimination provisions of this contract, the sponsor will impose such contract sanctions as it or the Federal Aviation Administration may determine to be appropriate, including, but not limited to:

    a. Withholding payments to the Contractor under the contract until the Contractor complies; and/or

    b. Cancelling, terminating, or suspending a contract, in whole or in part.

6. **Incorporation of Provisions:** The Contractor will include the provisions of paragraphs one through six in every subcontract, including procurements of materials and leases of equipment, unless exempt by the Acts, the Regulations, and directives issued pursuant thereto. The Contractor will take action with respect to any subcontract or procurement as the sponsor or the Federal Aviation Administration may direct as a means of enforcing such provisions including sanctions for noncompliance. Provided, that if the Contractor becomes involved in, or is threatened with litigation by a subcontractor, or supplier because of such direction, the Contractor may request the sponsor to enter into any litigation to protect the interests of the sponsor. In addition, the Contractor may request the United States to enter into the litigation to protect the interests of the United States.

Title VI List of Pertinent Nondiscrimination Acts and Authorities

During the performance of this contract, the Contractor, for itself, its assignees, and successors in interest (hereinafter referred to as the "Contractor") agrees to comply with the following non-discrimination statutes and authorities; including but not limited to:

- Title VI of the Civil Rights Act of 1964 (42 USC § 2000d *et seq*., 78 stat. 252) (prohibits discrimination on the basis of race, color, national origin);
- 49 CFR part 21 (Non-discrimination in Federally-assisted programs of the Department of Transportation—Effectuation of Title VI of the Civil Rights Act of 1964);
- The Uniform Relocation Assistance and Real Property Acquisition Policies Act of 1970, (42 USC § 4601) (prohibits unfair treatment of persons displaced or whose property has been acquired because of Federal or Federal-aid programs and projects);
- Section 504 of the Rehabilitation Act of 1973 (29 USC § 794 *et seq*.), as amended (prohibits discrimination on the basis of disability); and 49 CFR part 27;
- The Age Discrimination Act of 1975, as amended (42 USC § 6101 *et seq*.) (prohibits discrimination on the basis of age);
- Airport and Airway Improvement Act of 1982 (49 USC § 471, Section 47123), as amended (prohibits discrimination based on race, creed, color, national origin, or sex);
- The Civil Rights Restoration Act of 1987 (PL 100-209) (broadened the scope, coverage and applicability of Title VI of the Civil Rights Act of 1964, the Age Discrimination Act of 1975 and Section 504 of the Rehabilitation Act of 1973, by expanding the definition of the terms "programs or activities" to include all of the programs or activities of the Federal-aid recipients, sub-recipients and contractors, whether such programs or activities are Federally funded or not);
- Titles II and III of the Americans with Disabilities Act of 1990, which prohibit discrimination on the basis of disability in the operation of public entities, public and private transportation systems, places of public accommodation, and certain testing entities (42 USC §§ 12131 – 12189) as implemented by U.S. Department of Transportation regulations at 49 CFR parts 37 and 38;

- The Federal Aviation Administration's Nondiscrimination statute (49 USC § 47123) (prohibits discrimination on the basis of race, color, national origin, and sex);
- Executive Order 12898, Federal Actions to Address Environmental Justice in Minority Populations and Low-Income Populations, which ensures nondiscrimination against minority populations by discouraging programs, policies, and activities with disproportionately high and adverse human health or environmental effects on minority and low-income populations;
- Executive Order 13166, Improving Access to Services for Persons with Limited English Proficiency, and resulting agency guidance, national origin discrimination includes discrimination because of limited English proficiency (LEP). To ensure compliance with Title VI, you must take reasonable steps to ensure that LEP persons have meaningful access to your programs (70 Fed. Reg. at 74087 to 74100);
- Title IX of the Education Amendments of 1972, as amended, which prohibits you from discriminating because of sex in education programs or activities (20 USC 1681 et seq).

CLEAN AIR AND WATER POLLUTION CONTROL

Contractor agrees to comply with all applicable standards, orders, and regulations issued pursuant to the Clean Air Act (42 USC § 740-7671q) and the Federal Water Pollution Control Act as amended (33 USC § 1251-1387). The Contractor agrees to report any violation to the Owner immediately upon discovery. The Owner assumes responsibility for notifying the Environmental Protection Agency (EPA) and the Federal Aviation Administration.

Contractor must include this requirement in all subcontracts that exceeds $150,000.

CONTRACT WORKHOURS AND SAFETY STANDARDS ACT REQUIREMENTS

1. Overtime Requirements.

No contractor or subcontractor contracting for any part of the contract work which may require or involve the employment of laborers or mechanics shall require or permit any such laborer or mechanic, including watchmen and guards, in any workweek in which he or she is employed on such work to work in excess of forty hours in such workweek unless such laborer or mechanic receives compensation at a rate not less than one and one-half times the basic rate of pay for all hours worked in excess of forty hours in such workweek.

2. Violation; Liability for Unpaid Wages; Liquidated Damages.

In the event of any violation of the clause set forth in paragraph (1) of this clause, the Contractor and any subcontractor responsible therefor shall be liable for the unpaid wages. In addition, such contractor and subcontractor shall be liable to the United States (in the case of work done under contract for the District of Columbia or a territory, to such District or to such territory), for liquidated damages. Such liquidated damages shall be computed with respect to each individual laborer or mechanic, including watchmen and guards, employed in violation of the clause set forth in paragraph (1) of this clause, in the sum of $10 for each calendar day on which such individual was required or permitted to work in excess of the standard workweek of forty hours without payment of the overtime wages required by the clause set forth in paragraph (1) of this clause.

3. Withholding for Unpaid Wages and Liquidated Damages.

The Federal Aviation Administration (FAA) or the Owner shall upon its own action or upon written request of an authorized representative of the Department of Labor withhold or cause to be withheld, from any moneys payable on account of work performed by the contractor or subcontractor under any such contract or any other Federal contract with the same prime contractor, or any other federally assisted contract subject to the Contract Work Hours and Safety Standards Act, which is held by the same prime contractor, such sums as may be determined to be necessary to satisfy any liabilities of such contractor or subcontractor for unpaid wages and liquidated damages as provided in the clause set forth in paragraph (2) of this clause.

4. Subcontractors.

The Contractor or subcontractor shall insert in any subcontracts the clauses set forth in paragraphs (1) through (4) and also a clause requiring the subcontractor to include these clauses in any lower tier subcontracts. The prime contractor shall be responsible for compliance by any subcontractor or lower tier subcontractor with the clauses set forth in paragraphs (1) through (4) of this clause.

COPELAND "ANTI-KICKBACK" ACT

Contractor must comply with the requirements of the Copeland "Anti-Kickback" Act (18 USC 874 and 40 USC 3145), as supplemented by Department of Labor regulation 29 CFR part 3. Contractor and subcontractors are prohibited from inducing, by any means, any person employed on the project to give up any part of the compensation to which the employee is entitled. The Contractor and each Subcontractor must submit to the Owner, a weekly statement on the wages paid to each employee performing on covered work during the prior week. Owner must report any violations of the Act to the Federal Aviation Administration.

DAVIS-BACON REQUIREMENTS

1. Minimum Wages.

(i) All laborers and mechanics employed or working upon the site of the work will be paid unconditionally and not less often than once a week, and without subsequent deduction or rebate on any account (except such payroll deductions as are permitted by the Secretary of Labor under the Copeland Act (29 CFR Part 3)), the full amount of wages and bona fide fringe benefits (or cash equivalent thereof) due at time of payment computed at rates not less than those contained in the wage determination of the Secretary of Labor which is attached hereto and made a part hereof, regardless of any contractual relationship which may be alleged to exist between the Contractor and such laborers and mechanics.

Contributions made or costs reasonably anticipated for bona fide fringe benefits under section 1(b)(2) of the Davis-Bacon Act on behalf of laborers or mechanics are considered wages paid to such laborers or mechanics, subject to the provisions of paragraph (1)(iv) of this section; also, regular contributions made or costs incurred for more than a weekly period (but not less often than quarterly) under plans, funds, or programs which cover the particular weekly period, are deemed to be constructively made or incurred during such weekly period. Such laborers and mechanics shall be paid the appropriate wage rate and fringe benefits on the wage determination for the classification of work actually performed, without regard to skill, except as provided in 29 CFR Part 5.5(a)(4). Laborers or mechanics performing work in more than one classification may be compensated at the rate specified for each classification for the time actually worked therein: *Provided* that the employer's payroll records accurately set forth the time spent in each classification in which work is performed. The wage determination (including any additional classification and wage rates conformed under (1)(ii) of this section) and the Davis-Bacon poster (WH-1321) shall be posted at all times by the Contractor and its subcontractors at the site of the work in a prominent and accessible place where it can easily be seen by the workers.

(ii)(A) The contracting officer shall require that any class of laborers or mechanics, including helpers, which is not listed in the wage determination and which is to be employed under the contract shall be classified in conformance with the wage determination. The contracting officer shall approve an additional classification and wage rate and fringe benefits therefore only when the following criteria have been met:

(1) The work to be performed by the classification requested is not performed by a classification in the wage determination;

(2) The classification is utilized in the area by the construction industry; and

(3) The proposed wage rate, including any bona fide fringe benefits, bears a reasonable relationship to the wage rates contained in the wage determination.

(B) If the Contractor and the laborers and mechanics to be employed in the classification (if known), or their representatives, and the contracting officer agree on the classification and wage rate (including the amount designated for fringe benefits where appropriate), a report of the action taken shall be sent by the contracting officer to the Administrator of the Wage and Hour Division, Employment Standards Administration, U.S. Department of Labor, Washington, DC 20210. The Administrator, or an authorized representative, will approve, modify, or disapprove every additional classification action

within 30 days of receipt and so advise the contracting officer or will notify the contracting officer within the 30-day period that additional time is necessary.

(C) In the event the Contractor, the laborers, or mechanics to be employed in the classification, or their representatives, and the contracting officer do not agree on the proposed classification and wage rate (including the amount designated for fringe benefits where appropriate), the contracting officer shall refer the questions, including the views of all interested parties and the recommendation of the contracting officer, to the Administrator for determination. The Administrator, or an authorized representative, will issue a determination within 30 days of receipt and so advise the contracting officer or will notify the contracting officer within the 30-day period that additional time is necessary.

(D) The wage rate (including fringe benefits where appropriate) determined pursuant to subparagraphs (1)(ii) (B) or (C) of this paragraph, shall be paid to all workers performing work in the classification under this contract from the first day on which work is performed in the classification.

(iii) Whenever the minimum wage rate prescribed in the contract for a class of laborers or mechanics includes a fringe benefit which is not expressed as an hourly rate, the contractor shall either pay the benefit as stated in the wage determination or shall pay another bona fide fringe benefit or an hourly cash equivalent thereof.

(iv) If the Contractor does not make payments to a trustee or other third person, the Contractor may consider as part of the wages of any laborer or mechanic the amount of any costs reasonably anticipated in providing bona fide fringe benefits under a plan or program: *Provided* that the Secretary of Labor has found, upon the written request of the Contractor, that the applicable standards of the Davis-Bacon Act have been met. The Secretary of Labor may require the Contractor to set aside in a separate account assets for the meeting of obligations under the plan or program.

2. Withholding.

The Federal Aviation Administration or the sponsor shall upon its own action or upon written request of an authorized representative of the Department of Labor withhold or cause to be withheld from the Contractor under this contract or any other Federal contract with the same prime contractor, or any other federally-assisted contract subject to Davis-Bacon prevailing wage requirements, which is held by the same prime contractor, so much of the accrued payments or advances as may be considered necessary to pay laborers and mechanics, including apprentices, trainees, and helpers, employed by the Contractor or any subcontractor the full amount of wages required by the contract. In the event of failure to pay any laborer or mechanic, including any apprentice, trainee, or helper, employed or working on the site of work, all or part of the wages required by the contract, the Federal Aviation Administration may, after written notice to the Contractor, Sponsor, Applicant, or Owner, take such action as may be necessary to cause the suspension of any further payment, advance, or guarantee of funds until such violations have ceased.

3. Payrolls and Basic Records.

(i) Payrolls and basic records relating thereto shall be maintained by the Contractor during the course of the work and preserved for a period of three years thereafter for all laborers and mechanics working at the site of the work. Such records shall contain the name, address, and social security number of each such worker; his or her correct classification; hourly rates of wages paid (including rates of contributions or costs anticipated for bona fide fringe benefits or cash equivalents thereof of the types

described in 1(b)(2)(B) of the Davis-Bacon Act); daily and weekly number of hours worked; deductions made; and actual wages paid. Whenever the Secretary of Labor has found under 29 CFR 5.5(a)(1)(iv) that the wages of any laborer or mechanic include the amount of any costs reasonably anticipated in providing benefits under a plan or program described in section 1(b)(2)(B) of the Davis-Bacon Act, the Contractor shall maintain records that show that the commitment to provide such benefits is enforceable, that the plan or program is financially responsible, and that the plan or program has been communicated in writing to the laborers or mechanics affected, and that show the costs anticipated or the actual costs incurred in providing such benefits. Contractors employing apprentices or trainees under approved programs shall maintain written evidence of the registration of apprenticeship programs and certification of trainee programs, the registration of the apprentices and trainees, and the ratios and wage rates prescribed in the applicable programs.

(ii)(A) The Contractor shall submit weekly for each week in which any contract work is performed a copy of all payrolls to the Federal Aviation Administration if the agency is a party to the contract, but if the agency is not such a party, the Contractor will submit the payrolls to the applicant, Sponsor, or Owner, as the case may be, for transmission to the Federal Aviation Administration. The payrolls submitted shall set out accurately and completely all of the information required to be maintained under 29 CFR 5.5(a)(3)(i), except that full social security numbers and home addresses shall not be included on weekly transmittals. Instead the payrolls shall only need to include an individually identifying number for each employee (*e.g.* the last four digits of the employee's social security number). The required weekly payroll information may be submitted in any form desired. Optional Form WH–347 is available for this purpose from the Wage and Hour Division Web site at *www.dol.gov/whd/forms/wh347instr.htm* or its successor site. The prime contractor is responsible for the submission of copies of payrolls by all subcontractors. Contractors and subcontractors shall maintain the full social security number and current address of each covered worker and shall provide them upon request to the Federal Aviation Administration if the agency is a party to the contract, but if the agency is not such a party, the Contractor will submit them to the applicant, sponsor, or Owner, as the case may be, for transmission to the Federal Aviation Administration, the Contractor, or the Wage and Hour Division of the Department of Labor for purposes of an investigation or audit of compliance with prevailing wage requirements. It is not a violation of this section for a prime contractor to require a subcontractor to provide addresses and social security numbers to the prime contractor for its own records, without weekly submission to the sponsoring government agency (or the applicant, Sponsor, or Owner).

(B) Each payroll submitted shall be accompanied by a "Statement of Compliance," signed by the Contractor or subcontractor or his or her agent who pays or supervises the payment of the persons employed under the contract and shall certify the following:

(1) The payroll for the payroll period contains the information required to be provided under 29 CFR § 5.5(a)(3)(ii), the appropriate information is being maintained under 29 CFR § 5.5 (a)(3)(i), and that such information is correct and complete;

(2) Each laborer and mechanic (including each helper, apprentice, and trainee) employed on the contract during the payroll period has been paid the full weekly wages earned, without rebate, either directly or indirectly, and that no deductions have been made either directly or indirectly from the full wages earned, other than permissible deductions as set forth in Regulations 29 CFR Part 3;

(3) Each laborer or mechanic has been paid not less than the applicable wage rates and fringe benefits or cash equivalents for the classification of work performed, as specified in the applicable wage determination incorporated into the contract.

(C) The weekly submission of a properly executed certification set forth on the reverse side of Optional Form WH-347 shall satisfy the requirement for submission of the "Statement of Compliance" required by paragraph (3)(ii)(B) of this section.

(D) The falsification of any of the above certifications may subject the Contractor or subcontractor to civil or criminal prosecution under Section 1001 of Title 18 and Section 231 of Title 31 of the United States Code.

(iii) The Contractor or subcontractor shall make the records required under paragraph (3)(i) of this section available for inspection, copying, or transcription by authorized representatives of the sponsor, the Federal Aviation Administration, or the Department of Labor and shall permit such representatives to interview employees during working hours on the job. If the Contractor or subcontractor fails to submit the required records or to make them available, the Federal agency may, after written notice to the Contractor, Sponsor, applicant, or Owner, take such action as may be necessary to cause the suspension of any further payment, advance, or guarantee of funds. Furthermore, failure to submit the required records upon request or to make such records available may be grounds for debarment action pursuant to 29 CFR 5.12.

4. Apprentices and Trainees.

(i) Apprentices. Apprentices will be permitted to work at less than the predetermined rate for the work they performed when they are employed pursuant to and individually registered in a bona fide apprenticeship program registered with the U.S. Department of Labor, Employment and Training Administration, Bureau of Apprenticeship and Training, or with a State Apprenticeship Agency recognized by the Bureau, or if a person is employed in his or her first 90 days of probationary employment as an apprentice in such an apprenticeship program, who is not individually registered in the program, but who has been certified by the Bureau of Apprenticeship and Training or a State Apprenticeship Agency (where appropriate) to be eligible for probationary employment as an apprentice. The allowable ratio of apprentices to journeymen on the job site in any craft classification shall not be greater than the ratio permitted to the contractor as to the entire work force under the registered program. Any worker listed on a payroll at an apprentice wage rate, who is not registered or otherwise employed as stated above, shall be paid not less than the applicable wage rate on the wage determination for the classification of work actually performed. In addition, any apprentice performing work on the job site in excess of the ratio permitted under the registered program shall be paid not less than the applicable wage rate on the wage determination for the work actually performed. Where a contractor is performing construction on a project in a locality other than that in which its program is registered, the ratios and wage rates (expressed in percentages of the journeyman's hourly rate) specified in the Contractor's or subcontractor's registered program shall be observed. Every apprentice must be paid at not less than the rate specified in the registered program for the apprentice's level of progress, expressed as a percentage of the journeymen hourly rate specified in the applicable wage determination. Apprentices shall be paid fringe benefits in accordance with the provisions of the apprenticeship program. If the apprenticeship program does not specify fringe benefits, apprentices must be paid the full amount of fringe benefits listed on the wage determination for the applicable

classification. If the Administrator determines that a different practice prevails for the applicable apprentice classification, fringes shall be paid in accordance with that determination. In the event the Bureau of Apprenticeship and Training, or a State Apprenticeship Agency recognized by the Bureau, withdraws approval of an apprenticeship program, the Contractor will no longer be permitted to utilize apprentices at less than the applicable predetermined rate for the work performed until an acceptable program is approved.

(ii) Trainees. Except as provided in 29 CFR 5.16, trainees will not be permitted to work at less than the predetermined rate for the work performed unless they are employed pursuant to and individually registered in a program which has received prior approval, evidenced by formal certification by the U.S. Department of Labor, Employment and Training Administration. The ratio of trainees to journeymen on the job site shall not be greater than permitted under the plan approved by the Employment and Training Administration. Every trainee must be paid at not less than the rate specified in the approved program for the trainee's level of progress, expressed as a percentage of the journeyman hourly rate specified in the applicable wage determination. Trainees shall be paid fringe benefits in accordance with the provisions of the trainee program. If the trainee program does not mention fringe benefits, trainees shall be paid the full amount of fringe benefits listed on the wage determination unless the Administrator of the Wage and Hour Division determines that there is an apprenticeship program associated with the corresponding journeyman wage rate on the wage determination that provides for less than full fringe benefits for apprentices. Any employee listed on the payroll at a trainee rate that is not registered and participating in a training plan approved by the Employment and Training Administration shall be paid not less than the applicable wage rate on the wage determination for the classification of work actually performed. In addition, any trainee performing work on the job site in excess of the ratio permitted under the registered program shall be paid not less than the applicable wage rate on the wage determination for the work actually performed. In the event the Employment and Training Administration withdraws approval of a training program, the Contractor will no longer be permitted to utilize trainees at less than the applicable predetermined rate for the work performed until an acceptable program is approved.

(iii) Equal Employment Opportunity. The utilization of apprentices, trainees, and journeymen under this part shall be in conformity with the equal employment opportunity requirements of Executive Order 11246, as amended, and 29 CFR Part 30.

5. Compliance with Copeland Act Requirements.

The Contractor shall comply with the requirements of 29 CFR Part 3, which are incorporated by reference in this contract.

6. Subcontracts.

The Contractor or subcontractor shall insert in any subcontracts the clauses contained in 29 CFR Part 5.5(a)(1) through (10) and such other clauses as the Federal Aviation Administration may by appropriate instructions require, and also a clause requiring the subcontractors to include these clauses in any lower tier subcontracts. The prime contractor shall be responsible for the compliance by any subcontractor or lower tier subcontractor with all the contract clauses in 29 CFR Part 5.5.

7. Contract Termination: Debarment.

A breach of the contract clauses in paragraph 1 through 10 of this section may be grounds for termination of the contract, and for debarment as a contractor and a subcontractor as provided in 29 CFR 5.12.

8. Compliance with Davis-Bacon and Related Act Requirements.

All rulings and interpretations of the Davis-Bacon and Related Acts contained in 29 CFR Parts 1, 3, and 5 are herein incorporated by reference in this contract.

9. Disputes Concerning Labor Standards.

Disputes arising out of the labor standards provisions of this contract shall not be subject to the general disputes clause of this contract. Such disputes shall be resolved in accordance with the procedures of the Department of Labor set forth in 29 CFR Parts 5, 6, and 7. Disputes within the meaning of this clause include disputes between the Contractor (or any of its subcontractors) and the contracting agency, the U.S. Department of Labor, or the employees or their representatives.

10. Certification of Eligibility.

(i) By entering into this contract, the Contractor certifies that neither it (nor he or she) nor any person or firm who has an interest in the Contractor's firm is a person or firm ineligible to be awarded Government contracts by virtue of section 3(a) of the Davis-Bacon Act or 29 CFR 5.12(a)(1).

(ii) No part of this contract shall be subcontracted to any person or firm ineligible for award of a Government contract by virtue of section 3(a) of the Davis-Bacon Act or 29 CFR 5.12(a)(1).

(iii) The penalty for making false statements is prescribed in the U.S. Criminal Code, 18 USC 1001.

CERTIFICATION OF OFFERER/BIDDER REGARDING DEBARMENT

By submitting a bid/proposal under this solicitation, the bidder or offeror certifies that neither it nor its principals are presently debarred or suspended by any Federal department or agency from participation in this transaction.

CERTIFICATION OF LOWER TIER CONTRACTORS REGARDING DEBARMENT

The successful bidder, by administering each lower tier subcontract that exceeds $25,000 as a "covered transaction", must verify each lower tier participant of a "covered transaction" under the project is not presently debarred or otherwise disqualified from participation in this federally assisted project. The successful bidder will accomplish this by:

1. Checking the System for Award Management at website: http://www.sam.gov.
2. Collecting a certification statement similar to the Certification of Offerer /Bidder Regarding Debarment, above.
3. Inserting a clause or condition in the covered transaction with the lower tier contract.

If the Federal Aviation Administration later determines that a lower tier participant failed to disclose to a higher tier participant that it was excluded or disqualified at the time it entered the covered transaction, the FAA may pursue any available remedies, including suspension and debarment of the non-compliant participant.

DISADVANTAGED BUSINESS ENTERPRISE

Information Submitted as a matter of bidder responsiveness:

The Owner's award of this contract is conditioned upon Bidder or Offeror satisfying the good faith effort requirements of 49 CFR §26.53.

As a condition of bid responsiveness, the Bidder or Offeror must submit the following information with its proposal on the forms provided herein:

1) The names and addresses of Disadvantaged Business Enterprise (DBE) firms that will participate in the contract;
2) A description of the work that each DBE firm will perform;
3) The dollar amount of the participation of each DBE firm listed under (1)
4) Written statement from Bidder or Offeror that attests their commitment to use the DBE firm(s) listed under (1) to meet the Owner's project goal; and
5) If Bidder or Offeror cannot meet the advertised project DBE goal, evidence of good faith efforts undertaken by the Bidder or Offeror as described in appendix A to 49 CFR part 26.

Information submitted as a matter of bidder responsibility:

The Owner's award of this contract is conditioned upon Bidder or Offeror satisfying the good faith effort requirements of 49 CFR §26.53.

The successful Bidder or Offeror must provide written confirmation of participation from each of the DBE firms the Bidder or Offeror lists in its commitment within five days after bid opening.

1) The names and addresses of Disadvantaged Business Enterprise (DBE) firms that will participate in the contract;
2) A description of the work that each DBE firm will perform;
3) The dollar amount of the participation of each DBE firm listed under (1)
4) Written statement from Bidder or Offeror that attests their commitment to use the DBE firm(s) listed under (1) to meet the Owner's project goal; and
5) If Bidder or Offeror cannot meet the advertised project DBE goal, evidence of good faith efforts undertaken by the Bidder or Offeror as described in appendix A to 49 CFR part 26.

Solicitation Language (Race/Gender Neutral Means)

The requirements of 49 CFR part 26 apply to this contract. It is the policy of **Erie Regional Airport Authority** to practice nondiscrimination based on race, color, sex, or national origin in the award or performance of this contract. The Owner encourages participation by all firms qualifying under this solicitation regardless of business size or ownership.

Prime Contracts (Projects Covered by a DBE Program)

DISADVANTAGED BUSINESS ENTERPRISES

Contract Assurance (§ 26.13) –

The Contractor or subcontractor shall not discriminate on the basis of race, color, national origin, or sex in the performance of this contract. The Contractor shall carry out applicable requirements of 49 CFR part 26 in the award and administration of Department of Transportation-assisted contracts. Failure by

the Contractor to carry out these requirements is a material breach of this contract, which may result in the termination of this contract or such other remedy as the Owner deems appropriate, which may include, but is not limited to:

1) Withholding monthly progress payments;
2) Assessing sanctions;
3) Liquidated damages; and/or
4) Disqualifying the Contractor from future bidding as non-responsible.

Prompt Payment (§26.29) – The prime contractor agrees to pay each subcontractor under this prime contract for satisfactory performance of its contract no later than 30 days from the receipt of each payment the prime contractor receives from the Erie Regional Airport Authority. The prime contractor agrees further to return retainage payments to each subcontractor within 30 days after the subcontractor's work is satisfactorily completed. Any delay or postponement of payment from the above referenced time frame may occur only for good cause following written approval of the Erie Regional Airport Authority. This clause applies to both DBE and non-DBE subcontractors.

TEXTING WHEN DRIVING

In accordance with Executive Order 13513, "Federal Leadership on Reducing Text Messaging While Driving", (10/1/2009) and DOT Order 3902.10, "Text Messaging While Driving", (12/30/2009), the Federal Aviation Administration encourages recipients of Federal grant funds to adopt and enforce safety policies that decrease crashes by distracted drivers, including policies to ban text messaging while driving when performing work related to a grant or subgrant.

In support of this initiative, the Owner encourages the Contractor to promote policies and initiatives for its employees and other work personnel that decrease crashes by distracted drivers, including policies that ban text messaging while driving motor vehicles while performing work activities associated with the project. The Contractor must include the substance of this clause in all sub-tier contracts exceeding $3,500 that involve driving a motor vehicle in performance of work activities associated with the project.

ENERGY CONSERVATION REQUIREMENTS

Contractor and Subcontractor agree to comply with mandatory standards and policies relating to energy efficiency as contained in the state energy conservation plan issued in compliance with the Energy Policy and Conservation Act (42 USC 6201*et seq*).

EQUAL OPPORTUNITY CLAUSE

During the performance of this contract, the Contractor agrees as follows:

(1) The Contractor will not discriminate against any employee or applicant for employment because of race, color, religion, sex, or national origin. The Contractor will take affirmative action to ensure that applicants are employed, and that employees are treated during employment, without regard to their race, color, religion, sex, sexual orientation, gender identify, or national origin. Such action shall include, but not be limited to, the following: employment, upgrading, demotion, or transfer; recruitment or recruitment advertising; layoff, or termination; rates of pay or other forms of compensation; and selection for training, including apprenticeship. The Contractor agrees to post in conspicuous places, available to employees and applicants for employment, notices to be provided setting forth the provisions of this nondiscrimination clause.

(2) The Contractor will, in all solicitations or advertisements for employees placed by or on behalf of the Contractor, state that all qualified applicants will receive considerations for employment without regard to race, color, religion, sex, or national origin.

(3) The Contractor will send to each labor union or representative of workers with which it has a collective bargaining agreement or other contract or understanding, a notice to be provided advising the said labor union or workers' representatives of the Contractor's commitments under this section and shall post copies of the notice in conspicuous places available to employees and applicants for employment.

(4) The Contractor will comply with all provisions of Executive Order 11246 of September 24, 1965, and of the rules, regulations, and relevant orders of the Secretary of Labor.

(5) The Contractor will furnish all information and reports required by Executive Order 11246 of September 24, 1965, and by rules, regulations, and orders of the Secretary of Labor, or pursuant thereto, and will permit access to his books, records, and accounts by the administering agency and the Secretary of Labor for purposes of investigation to ascertain compliance with such rules, regulations, and orders.

(6) In the event of the Contractor's noncompliance with the nondiscrimination clauses of this contract or with any of the said rules, regulations, or orders, this contract may be canceled, terminated, or suspended in whole or in part and the Contractor may be declared ineligible for further Government contracts or federally assisted construction contracts in accordance with procedures authorized in Executive Order 11246 of September 24, 1965, and such other sanctions may be imposed and remedies invoked as provided in Executive Order 11246 of September 24, 1965, or by rule, regulation, or order of the Secretary of Labor, or as otherwise provided by law.

(7) The Contractor will include the portion of the sentence immediately preceding paragraph (1) and the provisions of paragraphs (1) through (7) in every subcontract or purchase order unless exempted by rules, regulations, or orders of the Secretary of Labor issued pursuant to section 204 of Executive Order 11246 of September 24, 1965, so that such provisions will be binding upon each subcontractor or vendor. The Contractor will take such action with respect to any subcontract or purchase order as the administering agency may direct as a means of enforcing such provisions, including sanctions for noncompliance*: Provided, however*, that in the event a contractor becomes involved in, or is threatened with, litigation with a subcontractor or vendor as a result of such direction by the administering agency

the Contractor may request the United States to enter into such litigation to protect the interests of the United States.

STANDARD FEDERAL EQUAL EMPLOYMENT OPPORTUNITY CONSTRUCTION CONTRACT SPECIFICATIONS

1. As used in these specifications:

a. "Covered area" means the geographical area described in the solicitation from which this contract resulted;

b. "Director" means Director, Office of Federal Contract Compliance Programs (OFCCP), U.S. Department of Labor, or any person to whom the Director delegates authority;

c. "Employer identification number" means the Federal social security number used on the Employer's Quarterly Federal Tax Return, U.S. Treasury Department Form 941;

d. "Minority" includes:

(1) Black (all persons having origins in any of the Black African racial groups not of Hispanic origin);

(2) Hispanic (all persons of Mexican, Puerto Rican, Cuban, Central or South American, or other Spanish culture or origin regardless of race);

(3) Asian and Pacific Islander (all persons having origins in any of the original peoples of the Far East, Southeast Asia, the Indian Subcontinent, or the Pacific Islands); and

(4) American Indian or Alaskan native (all persons having origins in any of the original peoples of North America and maintaining identifiable tribal affiliations through membership and participation or community identification).

2. Whenever the Contractor, or any subcontractor at any tier, subcontracts a portion of the work involving any construction trade, it shall physically include in each subcontract in excess of $10,000 the provisions of these specifications and the Notice which contains the applicable goals for minority and female participation and which is set forth in the solicitations from which this contract resulted.

3. If the Contractor is participating (pursuant to 41 CFR part 60-4.5) in a Hometown Plan approved by the U.S. Department of Labor in the covered area either individually or through an association, its affirmative action obligations on all work in the Plan area (including goals and timetables) shall be in accordance with that Plan for those trades which have unions participating in the Plan. Contractors shall be able to demonstrate their participation in and compliance with the provisions of any such Hometown Plan. Each contractor or subcontractor participating in an approved plan is individually required to comply with its obligations under the EEO clause and to make a good faith effort to achieve each goal under the Plan in each trade in which it has employees. The overall good faith performance by other contractors or subcontractors toward a goal in an approved Plan does not excuse any covered contractor's or subcontractor's failure to take good faith efforts to achieve the Plan goals and timetables.

4. The Contractor shall implement the specific affirmative action standards provided in paragraphs 7a through 7p of these specifications. The goals set forth in the solicitation from which this contract

resulted are expressed as percentages of the total hours of employment and training of minority and female utilization the Contractor should reasonably be able to achieve in each construction trade in which it has employees in the covered area. Covered construction contractors performing construction work in a geographical area where they do not have a Federal or federally assisted construction contract shall apply the minority and female goals established for the geographical area where the work is being performed. Goals are published periodically in the Federal Register in notice form, and such notices may be obtained from any Office of Federal Contract Compliance Programs office or from Federal procurement contracting officers. The Contractor is expected to make substantially uniform progress in meeting its goals in each craft during the period specified.

5. Neither the provisions of any collective bargaining agreement nor the failure by a union with whom the Contractor has a collective bargaining agreement to refer either minorities or women shall excuse the Contractor's obligations under these specifications, Executive Order 11246, or the regulations promulgated pursuant thereto.

6. In order for the non-working training hours of apprentices and trainees to be counted in meeting the goals, such apprentices and trainees shall be employed by the Contractor during the training period and the Contractor shall have made a commitment to employ the apprentices and trainees at the completion of their training, subject to the availability of employment opportunities. Trainees shall be trained pursuant to training programs approved by the U.S. Department of Labor.

7. The Contractor shall take specific affirmative actions to ensure equal employment opportunity. The evaluation of the Contractor's compliance with these specifications shall be based upon its effort to achieve maximum results from its actions. The Contractor shall document these efforts fully and shall implement affirmative action steps at least as extensive as the following:

a. Ensure and maintain a working environment free of harassment, intimidation, and coercion at all sites, and in all facilities at which the Contractor's employees are assigned to work. The Contractor, where possible, will assign two or more women to each construction project. The Contractor shall specifically ensure that all foremen, superintendents, and other onsite supervisory personnel are aware of and carry out the Contractor's obligation to maintain such a working environment, with specific attention to minority or female individuals working at such sites or in such facilities.

b. Establish and maintain a current list of minority and female recruitment sources, provide written notification to minority and female recruitment sources and to community organizations when the Contractor or its unions have employment opportunities available, and maintain a record of the organizations' responses.

c. Maintain a current file of the names, addresses, and telephone numbers of each minority and female off-the-street applicant and minority or female referral from a union, a recruitment source, or community organization and of what action was taken with respect to each such individual. If such individual was sent to the union hiring hall for referral and was not referred back to the Contractor by the union or, if referred, not employed by the Contractor, this shall be documented in the file with the reason therefore along with whatever additional actions the Contractor may have taken.

d. Provide immediate written notification to the Director when the union or unions with which the Contractor has a collective bargaining agreement has not referred to the Contractor a minority

person or female sent by the Contractor, or when the Contractor has other information that the union referral process has impeded the Contractor's efforts to meet its obligations.

e. Develop on-the-job training opportunities and/or participate in training programs for the area which expressly include minorities and women, including upgrading programs and apprenticeship and trainee programs relevant to the Contractor's employment needs, especially those programs funded or approved by the Department of Labor. The Contractor shall provide notice of these programs to the sources compiled under 7b above.

f. Disseminate the Contractor's EEO policy by providing notice of the policy to unions and training programs and requesting their cooperation in assisting the Contractor in meeting its EEO obligations; by including it in any policy manual and collective bargaining agreement; by publicizing it in the company newspaper, annual report, etc.; by specific review of the policy with all management personnel and with all minority and female employees at least once a year; and by posting the company EEO policy on bulletin boards accessible to all employees at each location where construction work is performed.

g. Review, at least annually, the company's EEO policy and affirmative action obligations under these specifications with all employees having any responsibility for hiring, assignment, layoff, termination, or other employment decisions, including specific review of these items, with onsite supervisory personnel such superintendents, general foremen, etc., prior to the initiation of construction work at any job site. A written record shall be made and maintained identifying the time and place of these meetings, persons attending, subject matter discussed, and disposition of the subject matter.

h. Disseminate the Contractor's EEO policy externally by including it in any advertising in the news media, specifically including minority and female news media, and providing written notification to and discussing the Contractor's EEO policy with other contractors and subcontractors with whom the Contractor does or anticipates doing business.

i. Direct its recruitment efforts, both oral and written, to minority, female, and community organizations, to schools with minority and female students; and to minority and female recruitment and training organizations serving the Contractor's recruitment area and employment needs. Not later than one month prior to the date for the acceptance of applications for apprenticeship or other training by any recruitment source, the Contractor shall send written notification to organizations, such as the above, describing the openings, screening procedures, and tests to be used in the selection process.

j. Encourage present minority and female employees to recruit other minority persons and women and, where reasonable, provide after school, summer, and vacation employment to minority and female youth both on the site and in other areas of a contractor's workforce.

k. Validate all tests and other selection requirements where there is an obligation to do so under 41 CFR part 60-3.

l. Conduct, at least annually, an inventory and evaluation at least of all minority and female personnel, for promotional opportunities and encourage these employees to seek or to prepare for, through appropriate training, etc., such opportunities.

m. Ensure that seniority practices, job classifications, work assignments, and other personnel practices do not have a discriminatory effect by continually monitoring all personnel and employment related activities to ensure that the EEO policy and the Contractor's obligations under these specifications are being carried out.

n. Ensure that all facilities and company activities are non-segregated except that separate or single user toilet and necessary changing facilities shall be provided to assure privacy between the sexes.

o. Document and maintain a record of all solicitations of offers for subcontracts from minority and female construction contractors and suppliers, including circulation of solicitations to minority and female contractor associations and other business associations.

p. Conduct a review, at least annually, of all supervisor's adherence to and performance under the Contractor's EEO policies and affirmative action obligations.

8. Contractors are encouraged to participate in voluntary associations, which assist in fulfilling one or more of their affirmative action obligations (7a through 7p). The efforts of a contractor association, joint contractor union, contractor community, or other similar groups of which the Contractor is a member and participant may be asserted as fulfilling any one or more of its obligations under 7a through 7p of these specifications provided that the Contractor actively participates in the group, makes every effort to assure that the group has a positive impact on the employment of minorities and women in the industry, ensures that the concrete benefits of the program are reflected in the Contractor's minority and female workforce participation, makes a good faith effort to meet its individual goals and timetables, and can provide access to documentation which demonstrates the effectiveness of actions taken on behalf of the Contractor. The obligation to comply, however, is the Contractor's and failure of such a group to fulfill an obligation shall not be a defense for the Contractor's noncompliance.

9. A single goal for minorities and a separate single goal for women have been established. The Contractor, however, is required to provide equal employment opportunity and to take affirmative action for all minority groups, both male and female, and all women, both minority and non-minority. Consequently, if the particular group is employed in a substantially disparate manner (for example, even though the Contractor has achieved its goals for women generally), the Contractor may be in violation of the Executive Order if a specific minority group of women is underutilized.

10. The Contractor shall not use the goals and timetables or affirmative action standards to discriminate against any person because of race, color, religion, sex, or national origin.

11. The Contractor shall not enter into any subcontract with any person or firm debarred from Government contracts pursuant to Executive Order 11246.

12. The Contractor shall carry out such sanctions and penalties for violation of these specifications and of the Equal Opportunity Clause, including suspension, termination, and cancellation of existing subcontracts as may be imposed or ordered pursuant to Executive Order 11246, as amended, and its implementing regulations, by the Office of Federal Contract Compliance Programs. Any contractor who fails to carry out such sanctions and penalties shall be in violation of these specifications and Executive Order 11246, as amended.

13. The Contractor, in fulfilling its obligations under these specifications, shall implement specific affirmative action steps, at least as extensive as those standards prescribed in paragraph 7 of these

specifications, so as to achieve maximum results from its efforts to ensure equal employment opportunity. If the Contractor fails to comply with the requirements of the Executive Order, the implementing regulations, or these specifications, the Director shall proceed in accordance with 41 CFR part 60-4.8.

14. The Contractor shall designate a responsible official to monitor all employment related activity to ensure that the company EEO policy is being carried out, to submit reports relating to the provisions hereof as may be required by the Government, and to keep records. Records shall at least include for each employee, the name, address, telephone number, construction trade, union affiliation if any, employee identification number when assigned, social security number, race, sex, status (e.g., mechanic, apprentice, trainee, helper, or laborer), dates of changes in status, hours worked per week in the indicated trade, rate of pay, and locations at which the work was performed. Records shall be maintained in an easily understandable and retrievable form; however, to the degree that existing records satisfy this requirement, contractors shall not be required to maintain separate records.

15. Nothing herein provided shall be construed as a limitation upon the application of other laws which establish different standards of compliance or upon the application of requirements for the hiring of local or other area residents (e.g. those under the Public Works Employment Act of 1977 and the Community Development Block Grant Program).

FEDERAL FAIR LABOR STANDARDS ACT (FEDERAL MINIMUM WAGE)

All contracts and subcontracts that result from this solicitation incorporate by reference the provisions of 29 CFR part 201, the Federal Fair Labor Standards Act (FLSA), with the same force and effect as if given in full text. The FLSA sets minimum wage, overtime pay, recordkeeping, and child labor standards for full and part-time workers.

The Contractor has full responsibility to monitor compliance to the referenced statute or regulation. The Contractor must address any claims or disputes that arise from this requirement directly with the U.S. Department of Labor – Wage and Hour Division.

CERTIFICATION REGARDING LOBBYING

The Bidder or Offeror certifies by signing and submitting this bid or proposal, to the best of his or her knowledge and belief, that:

(1) No Federal appropriated funds have been paid or will be paid, by or on behalf of the Bidder or Offeror, to any person for influencing or attempting to influence an officer or employee of an agency, a Member of Congress, an officer or employee of Congress, or an employee of a Member of Congress in connection with the awarding of any Federal contract, the making of any Federal grant, the making of any Federal loan, the entering into of any cooperative agreement, and the extension, continuation, renewal, amendment, or modification of any Federal contract, grant, loan, or cooperative agreement.

(2) If any funds other than Federal appropriated funds have been paid or will be paid to any person for influencing or attempting to influence an officer or employee of any agency, a Member of Congress, an officer or employee of Congress, or an employee of a Member of Congress in connection with this Federal contract, grant, loan, or cooperative agreement, the undersigned shall complete and submit Standard Form-LLL, "Disclosure Form to Report Lobbying," in accordance with its instructions.

(3) The undersigned shall require that the language of this certification be included in the award documents for all sub-awards at all tiers (including subcontracts, subgrants, and contracts under grants, loans, and cooperative agreements) and that all sub-recipients shall certify and disclose accordingly.

This certification is a material representation of fact upon which reliance was placed when this transaction was made or entered into. Submission of this certification is a prerequisite for making or entering into this transaction imposed by section 1352, title 31, U.S. Code. Any person who fails to file the required certification shall be subject to a civil penalty of not less than $10,000 and not more than $100,000 for each such failure.

PROHIBITION OF SEGREGATED FACILITIES

(a) The Contractor agrees that it does not and will not maintain or provide for its employees any segregated facilities at any of its establishments, and that it does not and will not permit its employees to perform their services at any location under its control where segregated facilities are maintained. The Contractor agrees that a breach of this clause is a violation of the Equal Employment Opportunity clause in this contract.

(b) "Segregated facilities," as used in this clause, means any waiting rooms, work areas, rest rooms and wash rooms, restaurants and other eating areas, time clocks, locker rooms and other storage or dressing areas, parking lots, drinking fountains, recreation or entertainment areas, transportation, and housing facilities provided for employees that are segregated by explicit directive or are in fact segregated on the basis of race, color, religion, sex, or national origin because of written or oral policies or employee custom. The term does not include separate or single-user rest rooms or necessary dressing or sleeping areas provided to assure privacy between the sexes.

(c) The Contractor shall include this clause in every subcontract and purchase order that is subject to the Equal Employment Opportunity clause of this contract.

OCCUPATIONAL SAFETY AND HEALTH ACT OF 1970

All contracts and subcontracts that result from this solicitation incorporate by reference the requirements of 29 CFR Part 1910 with the same force and effect as if given in full text. The employer must provide a work environment that is free from recognized hazards that may cause death or serious physical harm to the employee. The employer retains full responsibility to monitor its compliance and their subcontractor's compliance with the applicable requirements of the Occupational Safety and Health Act of 1970 (20 CFR Part 1910). The employer must address any claims or disputes that pertain to a referenced requirement directly with the U.S. Department of Labor – Occupational Safety and Health Administration.

PROCUREMENT OF RECOVERED MATERIALS

Contractor and subcontractor agree to comply with Section 6002 of the Solid Waste Disposal Act, as amended by the Resource Conservation and Recovery Act, and the regulatory provisions of 40 CFR Part 247. In the performance of this contract and to the extent practicable, the Contractor and subcontractors are to use products containing the highest percentage of recovered materials for items designated by the Environmental Protection Agency (EPA) under 40 CFR Part 247 whenever:

1) The contract requires procurement of $10,000 or more of a designated item during the fiscal year; or
2) The contractor has procured $10,000 or more of a designated item using Federal funding during the previous fiscal year.

The list of EPA-designated items is available at www.epa.gov/smm/comprehensive-procurement-guidelines-construction-products.

Section 6002(c) establishes exceptions to the preference for recovery of EPA-designated products if the contractor can demonstrate the item is:

a) Not reasonably available within a timeframe providing for compliance with the contract performance schedule;
b) Fails to meet reasonable contract performance requirements; or
c) Is only available at an unreasonable price.

TERMINATION FOR CONVENIENCE (CONSTRUCTION & EQUIPMENT CONTRACTS)

The Owner may terminate this contract in whole or in part at any time by providing written notice to the Contractor. Such action may be without cause and without prejudice to any other right or remedy of Owner. Upon receipt of a written notice of termination, except as explicitly directed by the Owner, the Contractor shall immediately proceed with the following obligations regardless of any delay in determining or adjusting amounts due under this clause:

1. Contractor must immediately discontinue work as specified in the written notice.
2. Terminate all subcontracts to the extent they relate to the work terminated under the notice.
3. Discontinue orders for materials and services except as directed by the written notice.
4. Deliver to the Owner all fabricated and partially fabricated parts, completed and partially completed work, supplies, equipment and materials acquired prior to termination of the work, and as directed in the written notice.
5. Complete performance of the work not terminated by the notice.
6. Take action as directed by the Owner to protect and preserve property and work related to this contract that Owner will take possession.

Owner agrees to pay Contractor for:

1) completed and acceptable work executed in accordance with the contract documents prior to the effective date of termination;

2) documented expenses sustained prior to the effective date of termination in performing work and furnishing labor, materials, or equipment as required by the contract documents in connection with uncompleted work;

3) reasonable and substantiated claims, costs, and damages incurred in settlement of terminated contracts with Subcontractors and Suppliers; and

4) reasonable and substantiated expenses to the Contractor directly attributable to Owner's termination action.

Owner will not pay Contractor for loss of anticipated profits or revenue or other economic loss arising out of or resulting from the Owner's termination action.

The rights and remedies this clause provides are in addition to any other rights and remedies provided by law or under this contract.

TERMINATION FOR DEFAULT (CONSTRUCTION)

Section 80-09 of FAA Advisory Circular 150/5370-10 establishes conditions, rights, and remedies associated with Owner termination of this contract due to default of the Contractor.

TRADE RESTRICTION CERTIFICATION

By submission of an offer, the Offeror certifies that with respect to this solicitation and any resultant contract, the Offeror –

1) is not owned or controlled by one or more citizens of a foreign country included in the list of countries that discriminate against U.S. firms as published by the Office of the United States Trade Representative (USTR);

2) has not knowingly entered into any contract or subcontract for this project with a person that is a citizen or national of a foreign country included on the list of countries that discriminate against U.S. firms as published by the USTR; and

3) has not entered into any subcontract for any product to be used on the Federal project that is produced in a foreign country included on the list of countries that discriminate against U.S. firms published by the USTR.

This certification concerns a matter within the jurisdiction of an agency of the United States of America and the making of a false, fictitious, or fraudulent certification may render the maker subject to prosecution under Title 18 USC Section 1001.

The Offeror/Contractor must provide immediate written notice to the Owner if the Offeror/Contractor learns that its certification or that of a subcontractor was erroneous when submitted or has become erroneous by reason of changed circumstances. The Contractor must require subcontractors provide immediate written notice to the Contractor if at any time it learns that its certification was erroneous by reason of changed circumstances.

Unless the restrictions of this clause are waived by the Secretary of Transportation in accordance with 49 CFR 30.17, no contract shall be awarded to an Offeror or subcontractor:

1) who is owned or controlled by one or more citizens or nationals of a foreign country included on the list of countries that discriminate against U.S. firms published by the USTR or
2) whose subcontractors are owned or controlled by one or more citizens or nationals of a foreign country on such USTR list or
3) who incorporates in the public works project any product of a foreign country on such USTR list.

Nothing contained in the foregoing shall be construed to require establishment of a system of records in order to render, in good faith, the certification required by this provision. The knowledge and information of a contractor is not required to exceed that which is normally possessed by a prudent person in the ordinary course of business dealings.

The Offeror agrees that, if awarded a contract resulting from this solicitation, it will incorporate this provision for certification without modification in all lower tier subcontracts. The Contractor may rely on the certification of a prospective subcontractor that it is not a firm from a foreign country included on the list of countries that discriminate against U.S. firms as published by USTR, unless the Offeror has knowledge that the certification is erroneous.

This certification is a material representation of fact upon which reliance was placed when making an award. If it is later determined that the Contractor or subcontractor knowingly rendered an erroneous certification, the Federal Aviation Administration (FAA) may direct through the Owner cancellation of the contract or subcontract for default at no cost to the Owner or the FAA.

VETERAN'S PREFERENCE

In the employment of labor (excluding executive, administrative, and supervisory positions), the Contractor and all sub-tier contractors must give preference to covered veterans as defined within Title 49 United States Code Section 47112. Covered veterans include Vietnam-era veterans, Persian Gulf veterans, Afghanistan-Iraq war veterans, disabled veterans, and small business concerns (as defined by 15 USC 632) owned and controlled by disabled veterans. This preference only applies when there are covered veterans readily available and qualified to perform the work to which the employment relates.

Page intentionally left blank for printing purposes

SPECIAL PROVISION 01

RETAINAGE

An amount equal to ten (10) percent of each estimate until 50% of the work has been completed. Thereafter the total amount of retainage will remain equal to 5 percent of the estimated completed cost shall continue to be retained while the project is progressing satisfactorily.

At 50% completion or any time thereafter when the work is not satisfactory, additional amounts may be retained, but the total retainage may not exceed 10% of the estimated completed contract value.

Retainage may be released upon substantial completion as specified in 50-15, except an amount equal to the estimated value of remaining work to be completed which shall be retained until final acceptance. After final acceptance has been granted as specified in 50-15, any remaining retainage shall be released.

SPECIAL PROVISION 02

INSURANCE

For State Aid projects include S8#9) Section 70-11 Responsibility for Damage and Tort Claims shall be supplemented with the following section 70-11 (a) as follows:

70-11 (a) Insurance Requirements

A. Standard Commercial Insurance

Maintain not less than, the following standard insurance types and limits of commercial insurance in force until completing and obtaining the department's acceptance of all work as specified in 50-15 "Final Acceptance".

TYPE OF INSURANCE	MINIMUM LIMITS REQUIRED [Note 1]
1. Commercial general liability insurance; shall be endorsed to include blanket contractual liability coverage.	$2 million combined single limits per occurrence with an annual aggregate limit of not less than $4 million.
2. Workers' compensation and employers' liability Insurance.	Workers' compensation limits: statutory limits Employers' liability limits: Bodily injury by accident: $100,000 each accident Bodily injury by disease: $500,000 each accident $100,000 each employee
3. Commercial automobile liability insurance; shall cover all contractor-owned, non-owned, and hired vehicles used in carrying out the contract.	$1 million-combined single limits per occurrence.

[Note 1] The contractor may satisfy these requirements through primary insurance coverage or through excess/umbrella policies.

SPECIAL PROVISION 03

TAXES

i. Contractor understands and acknowledges that Authority is exempt from payment of state and local sales and use tax. As such, Contractor may be eligible to claim an exemption when purchasing certain building machinery and equipment when such building machinery and equipment is ultimately transferred to the Authority. Contractor agrees it shall utilize a Pennsylvania Exemption Certificate to procure any and all items that meet the definition of building machinery and equipment subject to exemption to avoid payment of any unnecessary tax, as may be permitted by law.

ii. Authority shall complete or provide copies of the Pennsylvania Exemption Certificate or provide any other similar relevant document/s to allow Contractor to claim the sales tax exemption.

SPECIAL PROVISION 04

INDEPENDENT CONTRACTOR; FURTHER ASSURANCES AND ASSISTANCE

i. All work performed by the bidder or subcontractor or any person on their behalf under this Contract shall be performed as an independent contractor and not as an agent of Owner. Neither party shall be considered the employees or agents of the other. Neither party shall have the Owner to enter into any agreement purporting to bind the other without its specific written authorization.

ii. The parties shall at their own cost and expense execute and deliver such further documents and instruments and shall take such other actions as may be reasonably required or appropriate to evidence or carry out the intent and purposes of this Contract or to show the ability to carry out the intent and purposes of this Contract.

iii. In the event that any claim, demand, suit, or other legal proceeding arising out of any matter relating to this Contract is made or instituted by any third party against a party to this Contract, the other party shall, at its own cost and expense, provide the party against whom such claim is instituted with all reasonable information and assistance in the defense or other disposition thereof.

SPECIAL PROVISION 05

PENNSYLVANIA RIGHT-TO-KNOW LAW

i. The Pennsylvania Right-to-Know Law (the "RTKL"), 65 P.S, §§ 67.101-3104, applies to this Contract.

ii. Unless the bidder provides Owner, in writing, with the name and contact information of another person, Owner shall notify the bidder using the information provided by the bidder in the contact information provided in this Contract if Owner needs The bidder's assistance in any matter arising out of the RTKL. The bidder shall notify Owner in writing of any change in the name or the contact information within a reasonable time prior to the change.

iii. It is acknowledged that records which are directly related to the provision of the service contemplated by this Agreement are subject to the Pennsylvania Right-to-Know Law, 65 P.S. §§ 67.101 - 67.3104 (the "RTKL"). Upon notification to the the bidder that the Owner has received a request for records under the RTKL which pertains to the service contemplated by this Contract, the bidder shall fully assist the Owner in responding to the request. Such assistance shall include, at a minimum, providing the Owner, within five (5) business days, access to, and copies of, any document or information arising out of the Agreement in the bidder's possession that the Owner deems a Public Record ("Requested Information") and providing such other assistance as the Owner may request.

iv. If the bidder fails to provide the Requested Information to the Owner within the required time period, the failure shall be considered an event of default, and the bidder shall pay, indemnify and hold the Owner harmless for any damages, penalties, detriment or harm that the Owner may incur as a result of the bidder's failure, including reasonable attorney's fees incurred by the Owner in the administration of the Right-to-Know Request and any appeal therefrom.

v. If the bidder refuses to supply the Requested Information, and the Pennsylvania Office of Open Records or the Pennsylvania Courts determine that a record in the possession of a The bidder is a public record, in addition to the foregoing, liquidated damages of $100 per day will be assessed for each calendar day beyond the date the bidder was required to provide the record by the Pennsylvania Office of Open Records, or, upon appeal, the Pennsylvania Courts. The bidder's duties under this section shall survive the termination of this Agreement and as long as the bidder has Requested Information in its possession. Upon notification by the bidder that certain information required to be supplied to the Owner contains trade secret or confidential or proprietary information, Owner shall protect the confidentiality of the bidder's proprietary or confidential information included in the data provided.

SPECIAL PROVISION 06

COMPLIANCE WITH STEEL PRODUCTS PROCUREMENT ACT.

i. The bidder's attention is directed to the provisions of Act 3 enacted by the General Assembly of the Commonwealth of Pennsylvania and approved by the Governor on March 3, 1978, and as amended by Act 144 dated July 9, 1984 (the "Steel Products Procurement Act") which specifies that if any products are to be used or supplied in the performance of the contract, only steel products produced in the United States shall be used in the performance of the contract or any subcontract.

ii. The bidder shall certify with current estimates that all steel products to be used or supplied in the performance of the contract comply with the Steel Products Procurement Act.

iii. The provisions of the Steel Products Procurement Act shall not be considered as waived under any circumstances unless (A) the Owner has determined, under Owner granted in Section 4 (B) of the Act, that a certain Steel product or products are not produced in the United States in sufficient quantities to meet the requirements of the Contract, such a determination will be set forth in the proposal or in any addendum to the proposal; or, (B) the steel product to be used or supplied in performance of the contract is included on a list, published on the Pennsylvania Department of General Services website, of exempt machinery and equipment steel products identified by the Pennsylvania Department of General Services as having not been produced in the United States in sufficient quantities in the previous calendar year. Steel products are defined as products rolled, formed shaped, drawn extruded, forged, cast fabricated or otherwise similarly processed, or processed by a combination of two or more of such operations, from steel made in the United States by the open hearth, basic oxygen, electric furnace, Bessemer or other steel making process.

SPECIAL PROVISION 07

PUBLIC WORKS VERIFICATION ACT

i. Pursuant to Act 127 of 2012, the bidder, and any subcontractor of the bidder or any person employed on their behalf shall submit to Owner a fully completed and unaltered Public Works Employment Verification Form, as provided by the Pennsylvania Department of General Services (available at www.dgs.state.pa.us), for each employee hired by the bidder, and any subcontractor of the bidder or any person employed on their behalf after January 1, 2013 whether the employee will be working onsite or offsite of the project or otherwise. Submission of the Public Works Employment Verification Form to the Owner by the bidder is a precondition to award of the Contract.

ii. The Contract is subject to the requirements of the Public Works Employment Verification Act, Act 127 of 2012, 43 P.S. §§ 167.1-167.11, and applicable regulations and guidelines, 4 Pa. Code Ch. 66. The bidder, and any subcontractor of the bidder or any person employed on their behalf shall:

1. Participate in the E-Verify Program operated by the United States Department of Homeland Security and electronically verify employment eligibility for employees ("EVP") and shall, subject to the requirements of federal law governing the use of EVP, use EVP to verify employment eligibility of each new employee hired after January 1, 2013, whether such employee will be working onsite or offsite of the Project or otherwise. The bidder, and any subcontractor of the bidder or any person employed on their behalf shall prove participation with EVP by providing Owner with a fully completed and unaltered Public Works Employment Verification Form, as provided by the Pennsylvania Department of General Services (available at www.dgs.state.pa.us) for each employee hired by The bidder and any subcontractor of the bidder or any person employed on their behalf after January 1, 2013, whether such employee will be working onsite or offsite of the Project or otherwise. Each new employee hired by the bidder, and any subcontractor of the bidder or any person employed on their behalf after January 1, 2013 shall be verified within 5 business days of their start date, whether such employee will be working onsite or offsite of the project or otherwise.

2. Maintain documentation of continued compliance with the Public Works Employment Verification Act by utilizing the EVP for new employees hired throughout the duration of the public works contract.

3. Not discriminate against an employee on the basis of race, ethnicity, color or national origin while utilizing the EVP for verification purposes.

4. Cooperate with the Pennsylvania Department of General Services and/or any other competent authorities during any investigation or audit arising under the Act.

iii. Contracts between the bidder and any subcontractor of the bidder or any person employed on their behalf shall contain provisions substantially similar to the following:

This Agreement is subject to the requirements of the Public Works Employment Verification Act, Act 127 of 2012, 43 P.S. §§ 167.1-167.11, and applicable regulations and guidelines, 4 PA.Code Ch. 66 (the "Act"). Generally, the Act requires that prior to beginning work on a public works contract, Subcontractor of the bidders are required to submit to the public body awarding the contract a fully completed and unaltered Public Works Employment Verification Form, as provided by the Pennsylvania Department of General Services, and available at www.dgs.state.pa.us. Each new employee hired by Subcontractor of the bidder after January 1, 2013 shall be verified within 5 business days of his start date, whether such employee will be working onsite or offsite of a public work or otherwise.

The Subcontractor/s shall maintain documentation of continued compliance with the Public Works Employment Verification Act, Act 127 of 2012, 43 P.S. §§ 167.1-167.11, by utilizing the E-Verify Program for new employees hired throughout the duration of the public works contract. Subcontractor/s shall not discriminate against an employee on the basis of race, ethnicity, color or national origin while utilizing the E-Verify Program operated by the United States Department of Homeland Security for verification purposes.

SPECIAL PROVISION 08

COVID–19 INTERUPTIONS

Section 80-06 is amended to include the addition of the following:

The contractor shall not be entitled to compensation for delays caused by circumstances beyond the control of the Owner, including but not limited to actions related to or caused by the COVID-19 virus.

Section 80-10 is amended to include the addition of the following:

The Owner shall terminate the contract or portion thereof by written notice when the Contractor is prevented from proceeding with the construction contract as a direct result of an Executive Order of the President with respect to the execution of war or in the interest of national defense **or in response to a pandemic or national health and safety emergency including but not limited to COVID-19 virus.**

SPECIAL PROVISION 09

DISCRIMINATION PROHIBITED

According to 62 Pa.C.S.A. § 3701, the parties agree that:

i. In the hiring of employees for the performance of work under the Contract, the bidder or any subcontractor or any person acting on their behalf shall not discriminate against any citizen of this Commonwealth by reason of gender, race, creed or color who is qualified and available to perform the work to which the employment relates.

ii. No bidder or subcontractor of the bidder or any person on their behalf shall in any manner discriminate against or intimidate any employee hired for the performance of work under the contract on account of gender, race, creed or color.

iii. The Contract may be canceled or terminated by the Owner, and all money due or to become due under the contract may be forfeited for a violation of the terms or conditions of this portion of the Contract.

SPECIAL PROVISION 10

HUMAN RELATIONS ACT COMPLIANCE

Bidder shall comply with the Pennsylvania Human Relations Act, Act 222 of October 27, 1955 (P.L. 744) (43 P.S. Section 951, et. Seq.) of the Commonwealth of Pennsylvania, as amended. Specifically, the bidder agrees to prohibit discrimination because of race, color, religious creed, ancestry, age, sex, national origin, handicap or disability, by employers, employment agencies, labor organizations, contractors and others.

Page intentionally left blank for printing purposes

SUPPLEMENTAL INFORMATION
GEOTECHNICAL ENGINEERING REPORT

GEOTECHNICAL ENGINEERING REPORT

ERIE INTERNATIONAL AIRPORT
PROPOSED PASSENGER BOARDING BRIDGE
ERIE COUNTY, PENNSYLVANIA

Prepared for

Mead & Hunt
Lansing, Michigan

Prepared by

American Geotechnical & Environmental Services, Inc.
Canonsburg, Pennsylvania

DECEMBER 2020

A.G.E.S., INC. PROJECT NO. 20024-2

American Geotechnical & Environmental Services, Inc.

December 11, 2020

Sean Thompson, P.E.
Mead & Hunt
2605 Port Lansing Road
Lansing, Michigan 48906

Re: Geotechnical Engineering Report
Erie International Airport
Proposed Passenger Boarding Bridge
Erie County, Pennsylvania
A.G.E.S., Inc. Reference Number 20024-2

Dear Mr. Thompson:

American Geotechnical & Environmental Services (A.G.E.S.), Inc. is pleased to present our Geotechnical Engineering Report for the above referenced project. This report contains the data obtained from the drilling program and an evaluation of the existing materials as foundation bearing materials. Additionally, geotechnical recommendations are provided for the design of the foundations for the proposed Passenger Boarding Bridge and site preparation.

We wish to extend our appreciation for this opportunity to be of service to you. Should you have any questions, or require additional information, please contact us.

Sincerely,

American Geotechnical & Environmental Services, Inc.

Thomas F. Farrell, P.E.
Project Manager

TABLE OF CONTENTS

1.0 INTRODUCTION....1
1.1 Purpose of Investigation....1
1.2 Scope of Investigation....1
1.3 Proposed Construction....1

2.0 SUBSURFACE INVESTIGATION....2

3.0 SUBSURFACE CONDITIONS....3

4.0 LABORATORY TESTING....4

5.0 EVALUATION....5
5.1 Foundation Bearing Materials....5
5.2 Groundwater Conditions....6
5.3 Frost Depth....6
5.4 Site Soil Classification....6

6.0 RECOMMENDATIONS FOR DESIGN PURPOSES....7
6.1 Site Preparation....7
6.2 Foundation Design Parameters....7
6.3 Other Recommendations....8
6.4 Monitoring and Testing....8

7.0 LIMITATIONS....10

FIGURES

TABLE

APPENDIX A – ENGINEER'S FIELD BORING LOGS

APPENDIX B – LABORATORY TEST RESULTS

APPENDIX C – PLOTTED BORING LOG

1.0 INTRODUCTION

1.1 Purpose of Investigation

The objective of this investigation was to evaluate the engineering characteristics and distribution of the subsurface soils and groundwater at the site. The subsurface conditions were evaluated to establish structural design parameters for the Passenger Boarding Bridge.

1.2 Scope of Investigation

The scope of work performed during this investigation consisted of the following:

- Drilled one (1) boring and one (1) offset boring to obtain information on the subsurface conditions;

- Evaluated if the existing subgrade materials are suitable as a foundation bearing material;

- Prepared this report summarizing the data obtained and presenting an evaluation regarding the suitability of the existing subsurface conditions for the proposed construction. Additionally, this report includes recommendations on site preparation and geotechnical parameters for the design of the foundations for the proposed Passenger Boarding Bridge.

1.3 Proposed Construction

The proposed construction consists of constructing a Passenger Boarding Bridge. Refer to Figure 3 for the location of the Passenger Boarding Bridge.

2.0 SUBSURFACE INVESTIGATION

A subsurface investigation consisting of one (1) boring and one (1) offset boring was conducted to obtain information on the subsurface conditions. Borings TA-15 and TA-15A were drilled for the proposed Passenger Boarding Bridge. The location of Boring TA-15 was selected by Mead and Hunt and marked in the field by A.G.E.S., Inc. Boring TA-15A was offset two (2) feet from Boring TA-15 to avoid a possible utility. The project location is shown on the General Location Map and the Project Location Map, Figures 1 and 2, respectively. The locations of the borings are shown on the Boring Location Plan (Figure 3).

The borings were completed by R. Rindfuss Drilling, L.P. on May 26, 2020. A.G.E.S., Inc. provided the services of a full-time inspector during drilling to log the soil samples.

The borings were advanced continuously through the soil using a 2-inch O.D. split-spoon sampler and hollow stem augers. The split-spoon sampler was driven 18 inches using a 140-pound hammer falling 30 inches. The blows required to drive the sampler each six inch increment were recorded. The purpose of the first 6-inches is to penetrate any loose soil left by the auger. The cumulative number of blows required to drive the sampler through the last two 6-inch increments is designated as the Standard Penetration Resistance. The penetration resistance provides an indication as to the in-place relative density of granular soils, and the consistency of fine-grained soils. Relative densities and consistencies are an indication of the shear strength and compressibility of the soils. Penetration resistance values along with our visual identification of the soils are included on the Engineer’s Field Boring Logs in Appendix A.

Boring TA-15 and offset Boring TA-15A were both grouted upon completion.

3.0 SUBSURFACE CONDITIONS

The subsurface conditions encountered are summarized below and in Table 1. The subsurface conditions are based on the Engineer's Field Boring Logs and the laboratory test results, which are provided in Appendix A and Appendix B, respectively.

One (1) boring, TA-15, was proposed to obtain information on the foundation bearing materials for the proposed Passenger Boarding Bridge. As the initial split-spoon was being advanced in Boring TA-15 refusal was encountered at a depth of 2.3 feet. Boring TA-15 was terminated at a depth of 2.3 feet due to a concern that the refusal was due to a utility. An offset boring, TA-15A, was drilled and advanced to the scheduled depth without encountering refusal.

The pavement section was cored in both borings and consisted of approximately 11 inches of cement concrete over about 7 inches of subbase. Beneath the pavement section, five (5) layers of soil were identified in Boring TA-15A. The initial layer was 1.5 feet of fill which was described as a medium dense, damp, Sand with some gravel and little silt. Beneath the fill, four (4) layers of glacial till were identified. Bedrock was not encountered in Boring TA-15A.

The initial layer of glacial till was described as a loose, wet to damp Sand with trace amounts of silt, gravel and clay. Thickness of the initial layer of glacial till was about six (6) feet. Underlying the initial layer of glacial till, the second layer of glacial till was described as a loose to medium dense, wet, Gravel with some sand and little silt. Thickness of the second layer was about nine (9) feet. The third and fourth layers of glacial till were a loose to very dense, wet to moist, sand with little silt and gravel and trace clay. The third layer extended from a depth of 18.0 to 24.0 feet, while the fourth layer extended from a depth of 24 feet to the bottom of the boring at a depth of 40.5 feet

The initial water level was measured at a depth of approximately 19.1 feet (Elev. 706.2), while the final water level was measured at a depth of approximately 10.6 feet (Elev. 714.7). Wet split-spoons were observed from a depth of approximately 9.0 feet (Elev. 716.3) to approximately 12.0 feet (Elev. 713.3). Heaving sands were observed from a depth of approximately 21.0 feet (Elev. 704.3) to approximately 27.0 feet (Elev. 698.3).

4.0 LABORATORY TESTING

The laboratory testing program was developed to provide information regarding the engineering characteristics of the existing subsurface materials beneath the foundation. Index property tests, such as Water Content, Gradation, and Atterberg Limits were conducted on three (3) representative soil samples and are used to verify the field classifications. The soil classifications were generally similar, as two (2) samples were classified as SM/A-2-4(0) and the third sample was classified as SP-SM/A-2-4(0). Water contents varied from 11.4 to 23.4 percent.

5.0 EVALUATION

5.1 Foundation Bearing Materials

5.1.1 Spread Footings

The existing fill/glacial till materials are suitable foundation bearing materials for the proposed Passenger Boarding Bridge. Based on the Standard Penetration Test results, allowable bearing pressure for foundations placed on the in-place loose fill/glacial till material is estimated to be 2,000 pounds per square foot.

Settlement of a spread footing foundation footing designed for an allowable bearing pressure of 2,000 pounds per square foot was calculated to be less than one (1) inch, which is generally considered to be acceptable for this type of structure.

The location of the resultant of the reaction forces shall be within the middle two-thirds of the base width, as indicated in Section 11.6.3.3 of AASHTO.

5.1.2 Drilled Pier (Caisson) Foundation

Based on the materials encountered in Boring TA-15A, the soil modulus to use in analyzing the lateral deflection of a drilled pier (caisson) should be 25 pounds per cubic inch above the groundwater level of Elev. 716.2. Below the groundwater level of Elev. 716.2, a soil modulus of 20 pounds per cubic inch should be used in analyzing the lateral deflection of a drilled pier.

Due to potential artesian water, casing will need to be used to install the drilled piers to significantly reduce the flow of fine sand into the excavation. Also, the water level in the casing will need to be maintained above the artesian water to minimize the flow of groundwater and fine sand into the excavation of the drilled pier. The bottom of the drilled pier should be extended to below a depth of 27 feet (Elev. 698.2). Otherwise, it may be impossible to clean out the bottom due to heaving sands. A drilled pier foundation is not the preferred foundation type.

5.2 Groundwater Conditions

The zero-hour water level in Boring TA-15A was Elev. 706.3 feet and the final water level was Elev. 714.7 feet. The groundwater ranged from 10.6 to 18.7 feet below the ground surface. Several wet spoons were observed between Elev. 713.1 and 716.3 feet. Groundwater is not anticipated to be a concern if excavation for the footings does not exceed 9 feet below the ground surface.

5.3 Frost Depth

Based on procedures outlined in PennDOT Publication 242, a frost depth of 45 inches has been obtained.

5.4 Site Soil Classification

The subsurface investigation indicated the material at the site consists of at 40.5 feet of loose to very dense fill/glacial till material. The average SPT N-value is approximately 16.6. Therefore, according to AASHTO Table 3.10.3.1-1 – Site Class Definitions, the project location belongs to Soil Site Class D.

According to Figure 3.10.2.1-1 in AASHTO Design Manual, the site is located in Seismic Zone 1 with an acceleration coefficient of 0.05g. This results in a site factor F_{PGA}=1.6 per AASHTO Table 3.10.3.2-1.

6.0 RECOMMENDATIONS FOR DESIGN PURPOSES

Based on our evaluation of subsurface conditions, A.G.E.S., Inc. presents the following recommendations as general guidelines to be utilized in the design of the proposed Passenger Boarding Bridge and resurfacing of the parking lot.

6.1 Site Preparation

- Remove any topsoil and existing pavement from the proposed construction area.

- All excavations should be free from standing water. Direct surface water runoff away from the excavations.

- ASTM No. 57 coarse aggregate should be used to backfill any undercut. Place the ASTM No. 57 coarse aggregate in 8-inch loose layers and compact to 95 percent of the maximum dry density as determined by ASTM D-698.

6.2 Foundation Design Parameters

6.2.1 Spread Footing

- Use spread footing bearing on existing glacial till to support the load.

- Size the foundation using an allowable soil bearing pressure of 2,000 pounds per square foot. Use minimum footing width three (3) feet for individual footing.

- Design the spread footing so that the resultant is within the middle two-thirds of the footing.

- Place the bottom of the proposed foundation a minimum of forty-five (45) inches below the finished grade to protect against heave due to frost penetration.

- Use a Site Seismic Soil Classification of D.

- Use a Peak Ground Acceleration coefficient of 0.05g.

- Utilize a coefficient of friction for lateral resistance of 0.34 with a friction angle of 30 degrees.

6.2.2 Drilled Pier (Caisson)

- Utilize a Soil Modulus for loose sand of 25 pci above the water table and 20 pci below the water table.

- Use casing to install the drilled pier.

- Maintain the water level in the casing above Elev. 716.2.

6.3 Other Recommendations

- Use a groundwater elevation of 716.2 feet (9 feet below the existing ground surface).

- Use 40 pcf per foot to calculate the active lateral earth pressure.

- Use 60 pcf per foot to calculate the at-rest lateral earth pressure.

- Use 360 pcf per foot to calculate the passive lateral earth pressure.

6.4 Monitoring and Testing

- Have a qualified geotechnical engineer present at the site to conduct inspection of bearing material for each foundation element.

- Have a qualified Soils Technician under the direct supervision of a Geotechnical Engineer present at the site to physically inspect all backfilling, proof-rolling, and foundation excavation operations.

- Have a qualified Soils Technician under the direct supervision of a Geotechnical Engineer present at the site to physically inspect the surface material prior to placing the subbase material. It will be his or her responsibility to verify the suitability of the existing subgrade materials.

- Have a qualified Soils Technician under the direct supervision of the Geotechnical Engineer present at the site to monitor placement and compaction of fill material and to ensure that the specified density requirements are being achieved and, thus, minimize settlements of the fill/glacial till material.

7.0 LIMITATIONS

- This report has been prepared to present our recommendations with respect to the geotechnical aspects of the specific project discussed herein. In the event that there are any changes in the proposed structures, which formed the basis of our evaluation, these changes should be brought to our attention so that we may determine how such changes may affect our conclusions and recommendations.

- The evaluations and recommendations in this report are based on the conditions encountered at the specific times and locations sampled. It should be recognized that despite the use of due professional care, limitations on available data and variations between boring and sampling locations can result in some uncertainty with respect to the interpretation of these conditions and in the resultant recommendations.

- If the actual conditions encountered during construction vary from those reported herein, we are to be contacted to determine if the changes alter these recommendations.

- The conclusions and recommendations presented in this report have been prepared in accordance with the generally accepted professional geotechnical engineering principles and practices. No other warranties are implied or expressed.

FIGURES

PLT: JLM | CKD: ERR | QA\QC: MJL

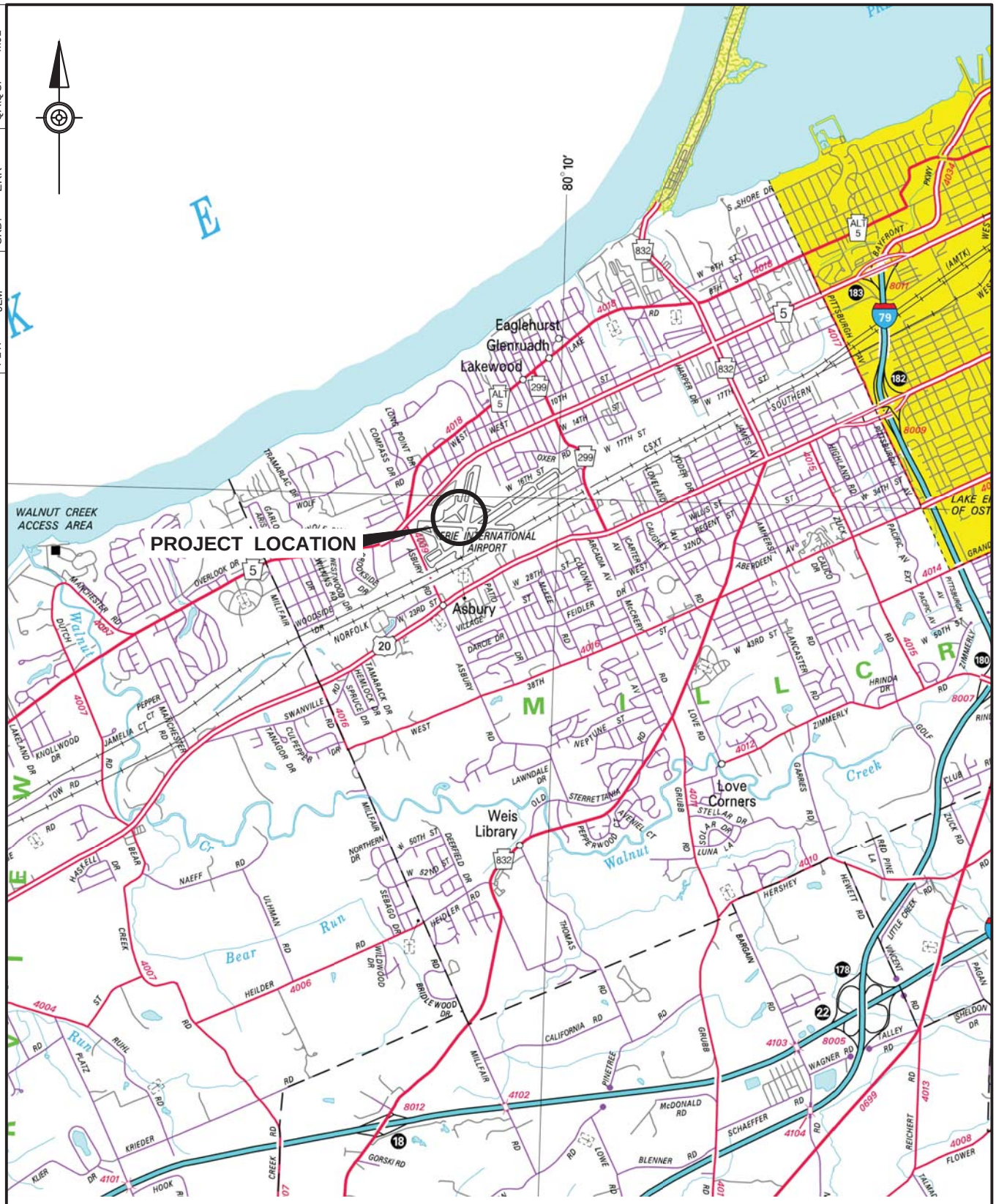

SOURCE: PA Dept. of Transportation, General Highway Map; Erie County

AMERICAN GEOTECHNICAL & ENVIRONMENTAL SERVICES, INC.

Canonsburg, PA
King of Prussia, PA
McLean, VA

ERIE INTERNATIONAL AIRPORT
REHABILITATION AND EXPANSION
OF TERMINAL APRON

ERIE COUNTY, PENNSYLVANIA

GENERAL LOCATION MAP

PROJECT:	20024
DRAWN:	JLM
DATE:	JUNE 2020
SCALE:	1" = 1 Mile
FIGURE:	1

File: M:_2020\20024\exhibits\misc\20024_genl.dwg
Date: 6/11/20

PLT: JLM | CKD: ERR | QA\QC: MJL

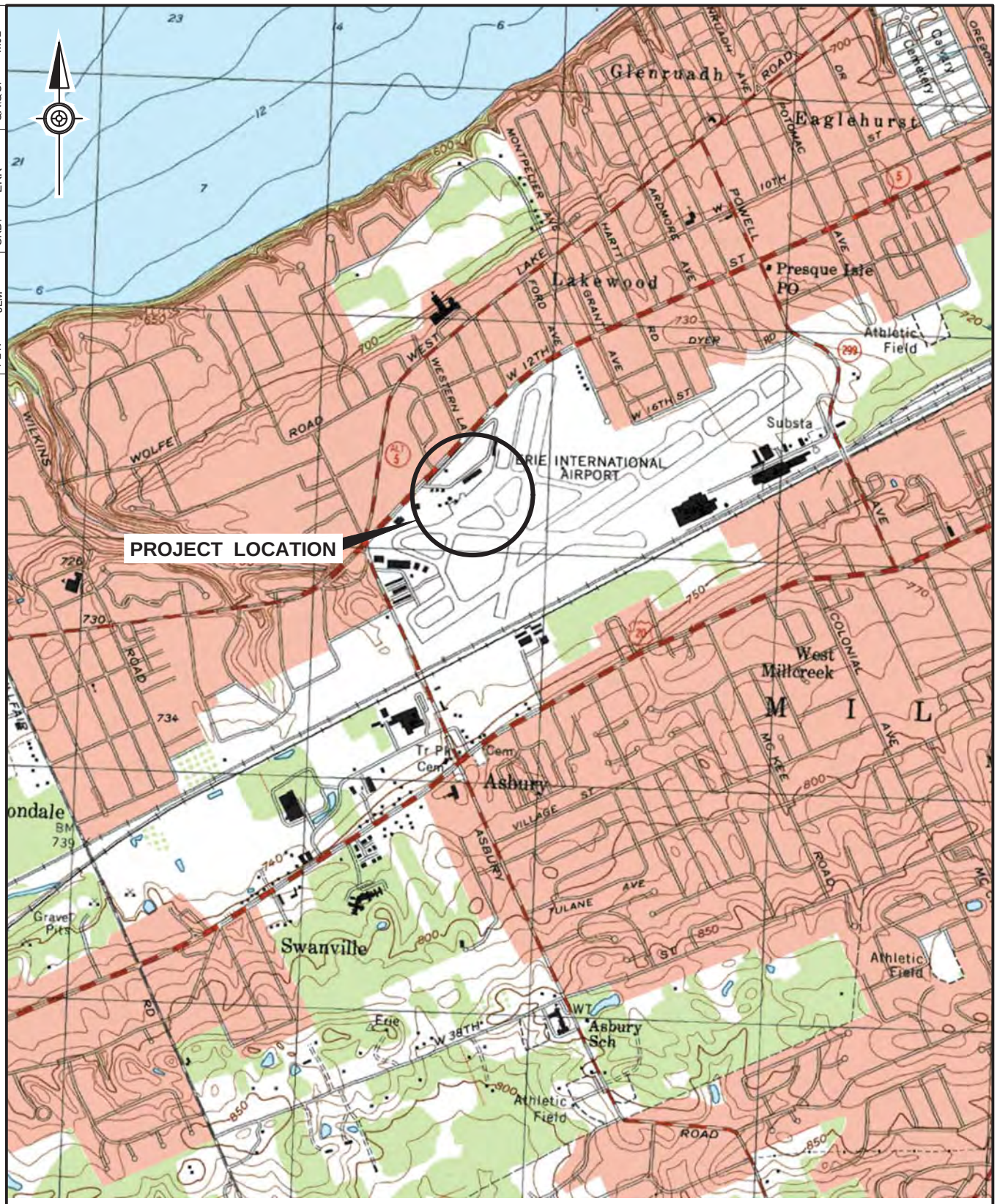

SOURCE: US Geological Survey, Quadrangle Map (7½' Series); SWANVILLE PA

AMERICAN GEOTECHNICAL & ENVIRONMENTAL SERVICES, INC.

Canonsburg, PA
King of Prussia, PA
McLean, VA

ERIE INTERNATIONAL AIRPORT
REHABILITATION AND EXPANSION
OF TERMINAL APRON

ERIE COUNTY, PENNSYLVANIA

PROJECT LOCATION MAP

PROJECT:	20024
DRAWN:	JLM
DATE:	JUNE 2020
SCALE:	1" = 2000'
FIGURE:	2

File: M:_2020\20024\exhibits\misc\20024_prjl.dwg
Date: 6/11/20

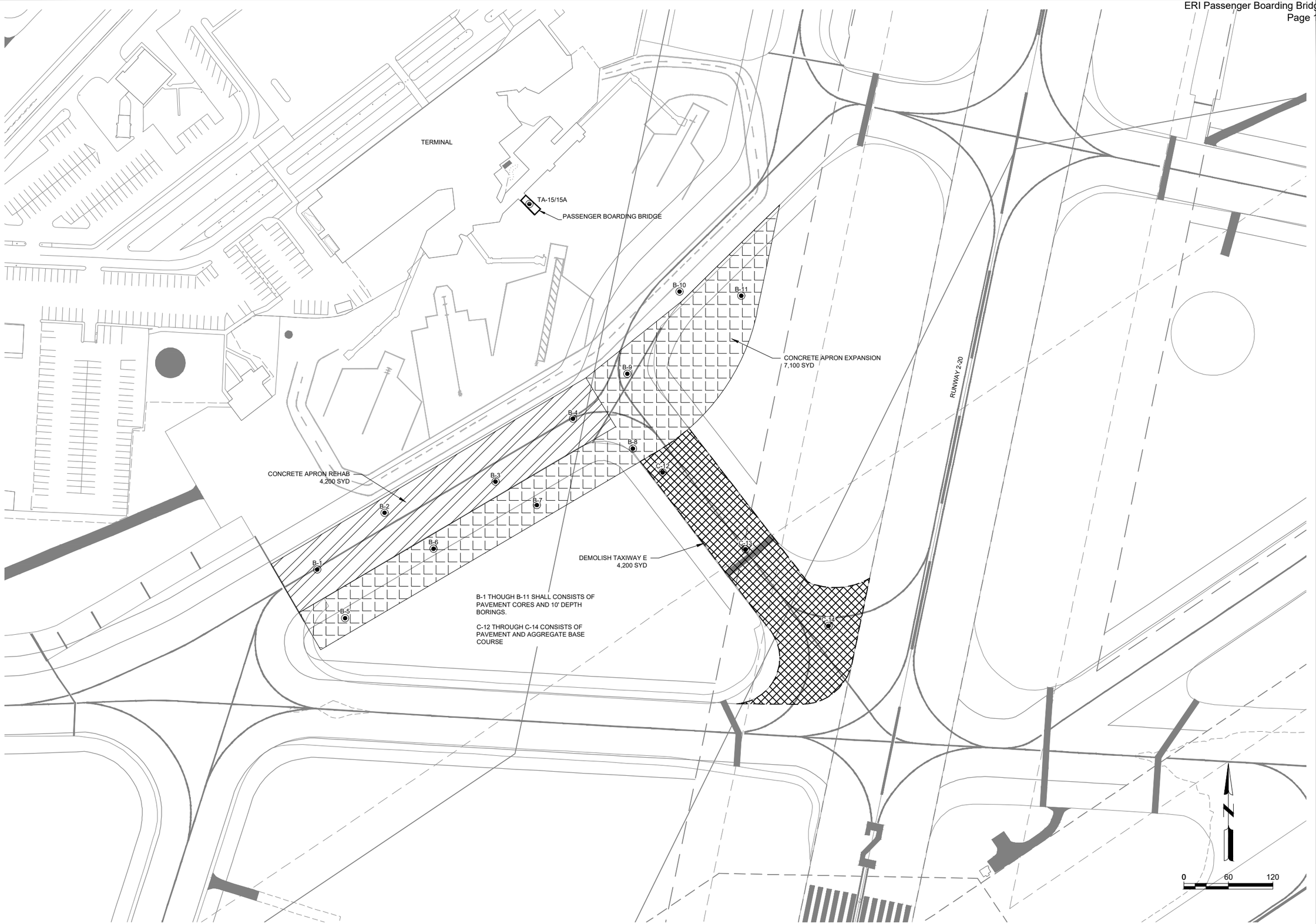

Mead & Hunt
Mead and Hunt, Inc.
2605 Port Lansing Road
Lansing, MI 48906
phone: 517-321-8334
meadhunt.com

These documents shall not be used for any purpose or project for which it is not intended. Mead & Hunt shall be indemnified by the client and held harmless and defended from all claims, damages, liabilities, losses, and expenses, including attorneys' fees and costs, arising out of such misuse or reuse of the documents. In addition, unauthorized reproduction of these documents, in part or as a whole, is prohibited.

ERIE INTERNATIONAL AIRPORT TERMINAL APRON EXPANSION

ERIE, PA

ISSUED

NOT FOR CONSTRUCTION

M&H NO.:	M3225600-201146.01
DATE:	APRIL 21, 2020
DESIGNED BY:	SCT
DRAWN BY:	SCT
CHECKED BY:	SCT

DO NOT SCALE DRAWINGS

SHEET CONTENTS

SOIL BORING LAYOUT

SHEET NO.

FIGURE: 3

X:\3225600\201146.01\TECH\CAD\DRAWINGS\CONTRACT DOCUMENTS.DWG
5/8/2020 3:12:27 PM

TABLE

TABLE 1
SUMMARY OF SOIL LABORATORY TESTING
ERIE INTERNATIONAL AIRPORT
PROPOSED PASSENGER BOARDING BRIDGES
ERIE COUNTY, PENNSYLVANIA

BORING NO.	SAMPLE NO.	SAMPLE DEPTH INTERVAL (feet)	MOISTURE CONTENT (%)	ATTERBURG LIMITS			AASHTO GRADATION					CLASSIFICATION	
				LL (%)	PL (%)	PI (%)	% ROCK FRAGS. OR GRAVEL	% SAND	% SILT	% CLAY	% TOTAL FINES	USCS	AASHTO
TA-15A	S-3 to S-5	4.5 - 9.0	11.9	NP	NP	NP	6.6	82.6	7.7	3.1	10.8	SP-SM	A-2-4(0)
TA-15A	S-13 to S-15	19.5 - 24.0	23.4	NP	NP	NP	11.4	75	12.1	1.5	13.6	SM	A-2-4(0)
TA-15A	S-22 to S-24	33.0 - 37.5	22.5	NP	NP	NP	0.1	76.3	21.8	1.8	23.6	SM	A-2-4(0)

BY: TFF 11/25/2020

CHK BY: ERR 12/04/2020

APPENDIX A

ENGINEER'S FIELD BORING LOGS

pennsylvania
DEPARTMENT OF TRANSPORTATION

ENGINEER'S LOG

Boring **TA-15** ECMS

District: ___ County: Erie
SR ___ Section ___
Baseline: Erie International Airport
Sta. ___ Offset ___
Segment ___ Offset ___
Coordinates:
Lat. ___ Long. ___
E N
Ground Elev. 725.3 ft.
Water Level Elev./Elapsed Time:
▽ Initial Dry Elapsed 0.0 hr.
▼ Final NR Elapsed NR
Driller: B. Rindfuss
Company: R. Rindfuss Drilling, L.P.

Drilling Start: 05/26/2020 8:30 am
Drilling Complete: 05/26/2020 9:00 am
Grouting Complete: 05/26/2020 2:30 pm
Rig: Simco 2800 Trailer
Hammer Type: Safety
SPT Hammer Efficiency:
Assumed 0.6 Measured ___
Hammer Calibration Date: ___
Hole Type: Continuous SPT
Casing Type: ___
Casing I.D.: ___ Casing Depth: 1.0 ft.
Rock Core Method: ___
Inspector: Jeffrey Scheller
Inspector Cert. No. 448-19

PG/PE Seal, Signature and Date

Final Log Checked and Approved
By: ___
Date: ___

NOTE: N values and all graphical plots are for information only.

ELEV.	GRAPHIC	MATERIAL DESCRIPTION COMMENTS - OBSERVATIONS	AASHTO / USCS	SAMPLE DEPTH	SAMPLE No.	BLOW COUNTS (Blows/ 0.5ft)	N_{60} --- RQD %	REC (ft.)	REC (%)	◇ RQD % ◇ ⊙ Soil/Rock Rec.% ⊙ 20 40 60 80 ▲ SPT (N_{60}) ▲ 10 20 30 40
725		**CEMENT CONCRETE**. 0.9'/El. 724.4			PC-1			0.9	60	
		SAND and **GRAVEL**. 1.5'/El. 723.8		1.5						
		Driller pushed spoon and hit hard resistances under cemented concrete. *Boring terminated due to possible utility.* 2.3'/El. 723.0								
		Bottom of boring.								
720										
715										

PENNDOT ENGINEER'S LOG - PENNDOT_GINT_VERSION_1.2.2.2_8-24-2016.GDT - 12/11/20 11:01 - L:_GINT\PROJECTS\2020\20024.GPJ

pennsylvania
DEPARTMENT OF TRANSPORTATION

ENGINEER'S LOG

Boring **TA-15A** ECMS _____
District: ___ County: Erie
SR _____ Section _____
Baseline: Erie International Airport
Sta. _____ Offset _____
Segment _____ Offset _____
Coordinates:
Lat. _____ Long. _____
E N
Ground Elev. 725.3 ft.
Water Level Elev./Elapsed Time:
▽ Initial 706.2 ft. Elapsed 0.0 hr.
▼ Final 714.7 ft. Elapsed 18.0 hr.
Driller: B. Rindfuss
Company: R. Rindfuss Drilling, L.P.

Drilling Start: 05/26/2020 9:00 am
Drilling Complete: 05/26/2020 2:00 pm
Grouting Complete: 05/27/2020 9:00 am
Rig: Simco 2800 Trailer
Hammer Type: Safety
SPT Hammer Efficiency:
Assumed 0.6 Measured _____
Hammer Calibration Date: _____
Hole Type: Continuous SPT
Casing Type: Hollow Stem Auger
Casing I.D.: 3.25 in Casing Depth: 40.5 ft.
Rock Core Method: _____
Inspector: Jeff Scheller
Inspector Cert. No. 448-19

PG/PE Seal, Signature and Date

Final Log Checked and Approved
By: E. Rohrbough / M. Lemansky
Date: 6/11/2020

Lab Testing Performed on Sample
NOTE: N values and all graphical plots are for information only.

ELEV.	GRAPHIC	MATERIAL DESCRIPTION / COMMENTS - OBSERVATIONS	AASHTO / USCS	SAMPLE DEPTH	SAMPLE No.	BLOW COUNTS (Blows/ 0.5ft)	N_{60} --- RQD %	REC (ft.)	REC (%)
725		**CEMENT CONCRETE**. 0.9'/El. 724.4			PC-1			0.9	60
		SUBBASE. 1.5'/El. 723.8		1.5					
		Boring moved 2.0' @ 52° azimuth.	a-1-b / sp		S-1	8-8-4	12	1.4	93
		SAND, some Gravel, little Silt, medium dense, damp, homogeneous, brown to gray, fill. 3.0'/El. 722.3		3.0	S-2	4-3-3	6	1.3	87
		SAND, trace Silt, trace Gravel, trace Clay, loose, wet to damp, homogeneous, poorly graded, brown to brown gray, glacial till.		4.5	S-3	3-4-4	8	1.4	93
720		*Class. on S-3 to S-5 (4.5-9.0') N.M.C.=11.9%.*	A-2-4 / SP-SM	6.0	S-4	3-4-4	8	1.5	100
		Tip of S-5, spoon wet.		7.5	S-5	3-4-6	10	1.3	87
		9.0'/El. 716.3		9.0					
		GRAVEL, some Sand, little Silt, loose to medium dense, wet, homogeneous, well graded, rounded to sub-angular, gray to dark gray, glacial till.			S-6	3-3-3	6	0.8	53
715 ▼		*S-6, wet spoon.*		10.5	S-7	2-4-3	7	0.9	60
		S-7, wet spoon.	a-1-a / gw	12.0	S-8	3-5-3	8	1.1	73
				13.5	S-9	5-8-6	14	1.5	100

◇ RQD % ◇
⊙ Soil/Rock Rec.% ⊙ (20 40 60 80)
▲ SPT (N_{60}) ▲ (10 20 30 40)

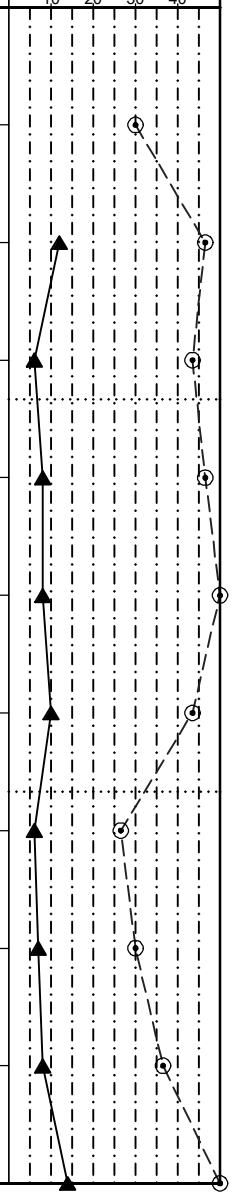

PENNDOT ENGINEER'S LOG - PENNDOT_GINT_VERSION_1.2.2.2_8-24-2016.GDT - 12/11/20 11:01 - L:_GINT\PROJECTS\2020\20024.GPJ

pennsylvania DEPARTMENT OF TRANSPORTATION

ENGINEER'S LOG

Boring **TA-15A** ECMS _____ District: _____ County: Erie

SR _____ Section _____

Sta. _____ Offset _____

Sheet 2 of 3

NOTE: N values and all graphical plots are for information only.

Lab Testing Performed on Sample

ELEV.	GRAPHIC	MATERIAL DESCRIPTION COMMENTS - OBSERVATIONS	AASHTO / USCS	SAMPLE DEPTH	SAMPLE No.	BLOW COUNTS (Blows/ 0.5ft)	N_{60} --- RQD %	REC (ft.)	REC (%)
710		**GRAVEL**, some Sand, little Silt, loose to medium dense, wet, homogeneous, well graded, rounded to sub-angular, gray to dark gray, glacial till. *(Layer continued from the previous page.)*	a-1-a / gw	15.0	S-10	5-8-12	20	1.5	100
				16.5	S-11	8-9-11	20	1.5	100
		18.0'/El. 707.3		18.0					
		SAND, little Silt, little Gravel, trace Clay, medium dense, wet, homogeneous, poorly graded, brown to red brown, glacial till.			S-12	5-8-7	15	1.5	100
▽				19.5	S-13	3-5-7	12	1.5	100
705		*Class. on S-13 to S-15 (19.5-24.0') N.M.C.=23.4%.*	A-2-4 / SM						
		Driller experienced heaving samples, 21.0-27.0'.		21.0	S-14	3-5-8	13	1.5	100
				22.5	S-15	4-5-9	14	1.5	100
		24.0'/El. 701.3		24.0					
		SAND, little Silt, little Gravel, trace Clay, fine grained, loose to very dense, wet to moist, homogeneous, poorly graded, light gray to gray, glacial till.			S-16	5-6-6	12	1.5	100
700				25.5	S-17	5-6-8	14	1.5	100
				27.0	S-18	5-8-9	17	1.5	100
				28.5	S-19	10-10-18	28	1.5	100
			A-2-4 / SM	30.0	S-20	13-18-27	45	1.5	100
695				31.5	S-21	18-27-29	56	1.5	100
				33.0	S-22	2-5-9	14	1.5	100
		Class. on S-22 to S-24 (33.0-37.5' N.M.C.=22.5%.		34.5					

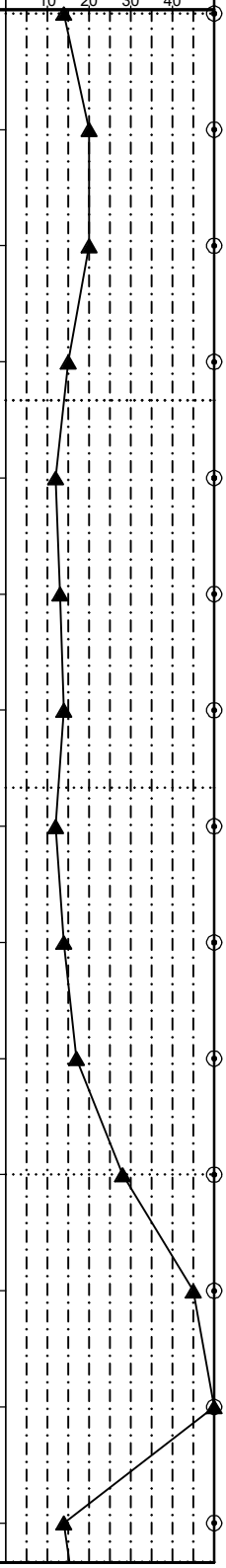

PENNDOT ENGINEER'S LOG - PENNDOT_GINT_VERSION_1.2.2.2_8-24-2016.GDT - 12/11/20 11:01 - L:_GINT\PROJECTS\2020\20024.GPJ

pennsylvania DEPARTMENT OF TRANSPORTATION

ENGINEER'S LOG

Boring **TA-15A** ECMS _____ District: _____ County: Erie

SR _____ Section _____

Sta. _____ Offset _____

Sheet 3 of 3

NOTE: N values and all graphical plots are for information only.

Lab Testing Performed on Sample

ELEV.	GRAPHIC	MATERIAL DESCRIPTION COMMENTS - OBSERVATIONS	AASHTO / USCS	SAMPLE DEPTH	SAMPLE No.	BLOW COUNTS (Blows/ 0.5ft)	N_{60} --- RQD %	REC (ft.)	REC (%)	◇ RQD % ◇ ⊙ Soil/Rock Rec.% ⊙ 20 40 60 80 ▲ SPT (N_{60}) ▲ 10 20 30 40
690		**SAND**, little Silt, little Gravel, trace Clay, fine grained, loose to very dense, wet to moist, homogeneous, poorly graded, light gray to gray, glacial till. *(Layer continued from the previous page.)*	A-2-4 / SM		S-23	2-6-12	18	1.5	100	
				36.0	S-24	10-13-15	28	1.5	100	
				37.5	S-25	5-8-9	17	1.5	100	
				39.0	S-26	3-2-4	6	1.5	100	
685		40.5'/El. 684.8								
		Bottom of boring.								
680										
675										

PENNDOT ENGINEER'S LOG - PENNDOT_GINT_VERSION_1.2.2.2_8-24-2016.GDT - 12/11/20 11:01 - L:_GINT\PROJECTS\2020\20024.GPJ

APPENDIX B

LABORATORY SOIL TEST RESULTS

American Geotechnical Environmental Services Inc
4 Grandview Circle, Suite 100
Canonsburg, PA 15317
Telephone: 724-916-0300

GRAIN SIZE DISTRIBUTION

CLIENT Mead and Hunt **PROJECT NAME** EIA - Proposed Terminal Apron Rehabilitation

PROJECT NUMBER 20024 **PROJECT LOCATION** Erie County, PA

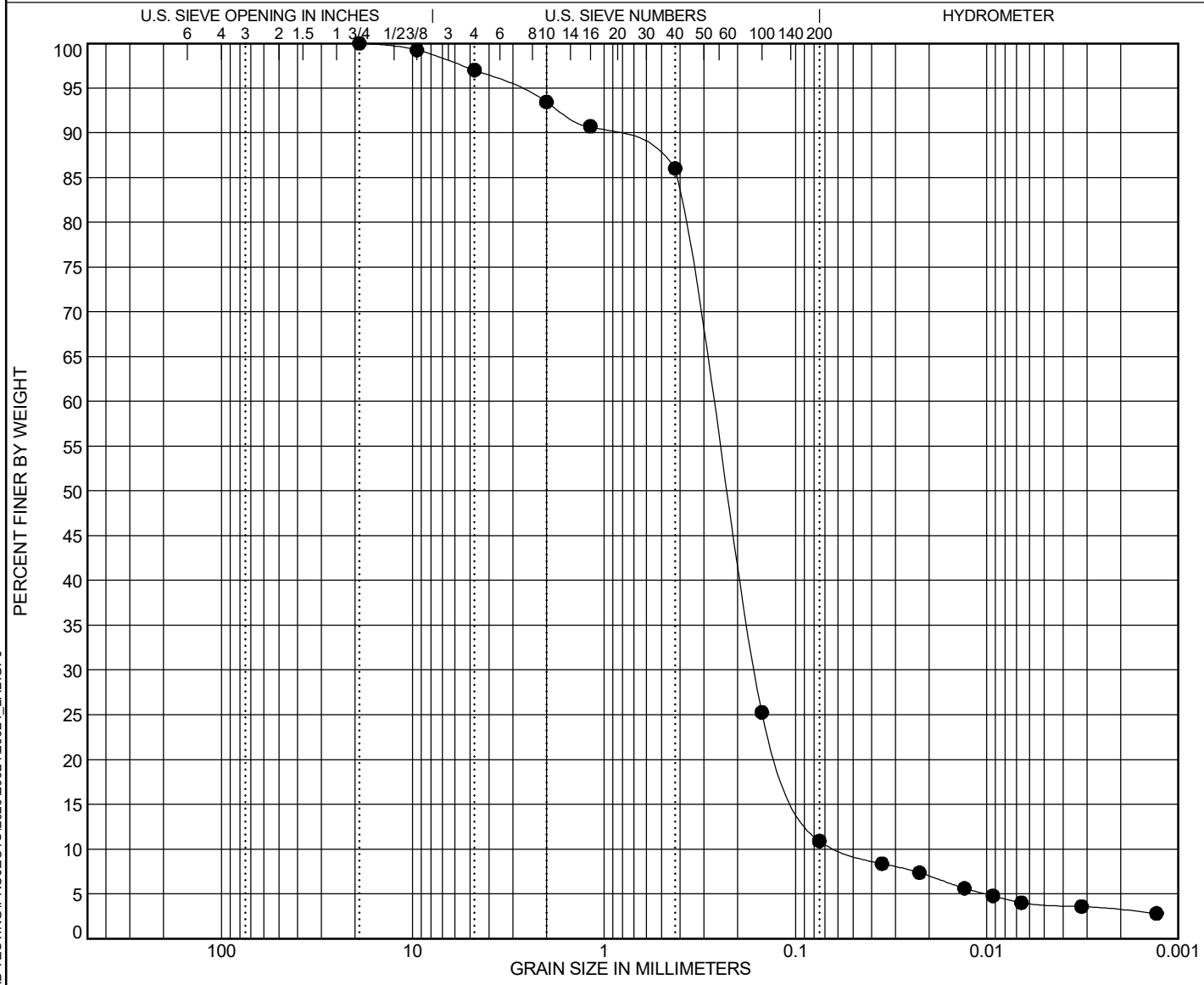

AASHTO GRAIN SIZE RANGES

COBBLES	GRAVEL	SAND	SILT OR CLAY

	Sample Location	Lab Sample ID	Date Tested	Sample Type
●	**TA-15A 4.5 - 9.0**	**20174**	**6/4/2020**	**Jars, S-3, S-4, S-5**

Classification (USCS/AASHTO)

POORLY GRADED SAND with SILT(SP-SM) / A-2-4(0)

N.M.C.%	LL	PL	PI	D50	%Gravel	%Sand	%Silt	%Clay
11.9	**NP**	**NP**	**NP**	**0.229**	**6.6**	**82.6**	**7.7**	**3.1**

GRAIN SIZE AASHTO - 2020 - DATA ENTRY.GDT - 6/11/20 09:43 - L:_GINT\LAB TESTING\PROJECTS\2020\20024\20024_LAB.GPJ

GRAIN SIZE DISTRIBUTION

American Geotechnical Environmental Services Inc
4 Grandview Circle, Suite 100
Canonsburg, PA 15317
Telephone: 724-916-0300

CLIENT Mead and Hunt **PROJECT NAME** ERI - Proposed Terminal Apron Rehabilitation

PROJECT NUMBER 20024 **PROJECT LOCATION** Erie County, PA

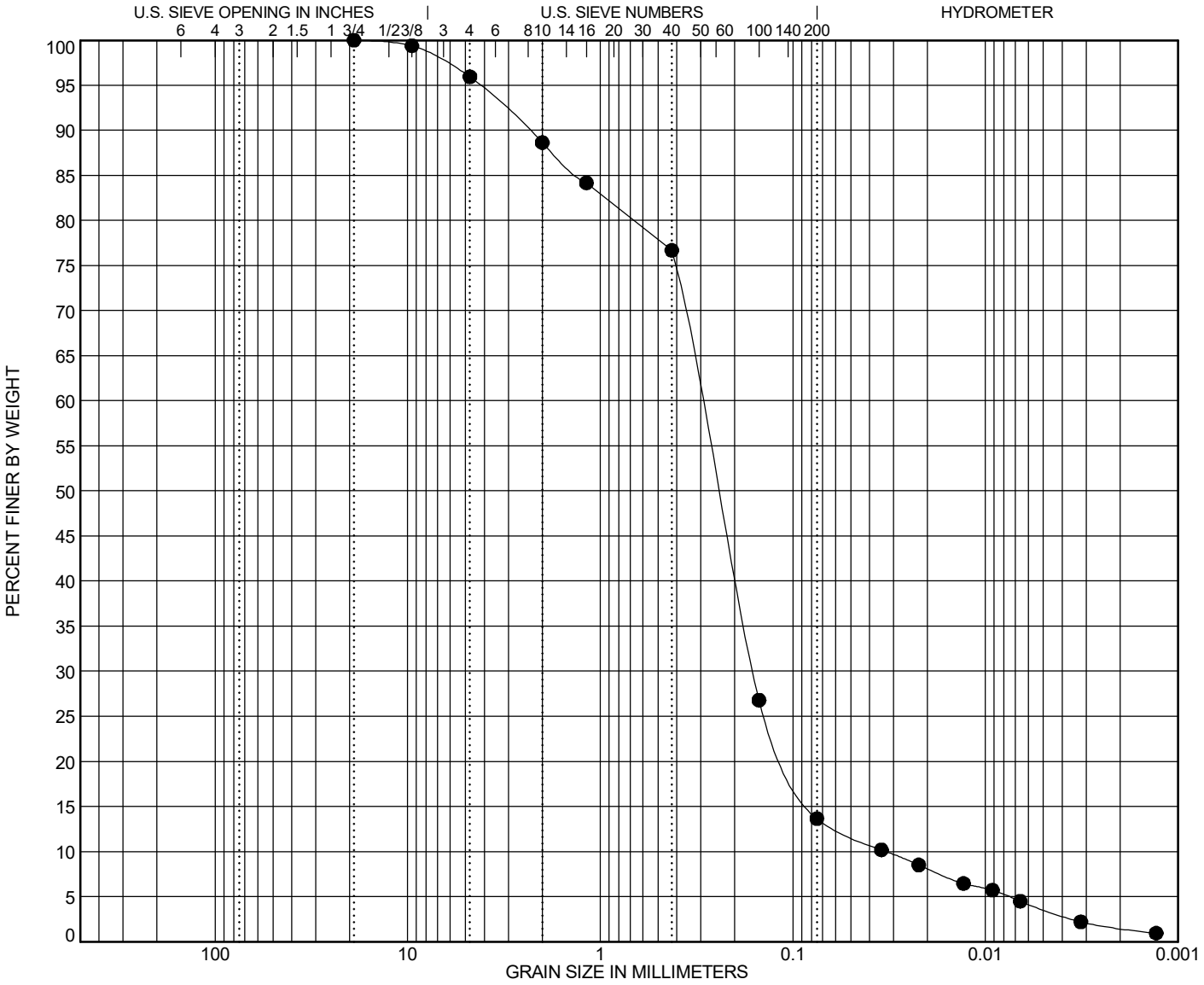

AASHTO GRAIN SIZE RANGES

COBBLES	GRAVEL	SAND	SILT OR CLAY

	Sample Location	Lab Sample ID	Date Tested	Sample Type
●	**TA-15A 19.5 - 24.0**	**20175**	**6/4/2020**	**Jars, S-13, S-14, S-15**

Classification (USCS/AASHTO)

SILTY SAND(SM) / A-2-4(0)

N.M.C.%	LL	PL	PI	D50	%Gravel	%Sand	%Silt	%Clay
23.4	**NP**	**NP**	**NP**	**0.244**	**11.4**	**75.0**	**12.1**	**1.5**

GRAIN SIZE AASHTO - 2020 - DATA ENTRY.GDT - 12/11/20 11:03 - L:_GINT\LAB TESTING\PROJECTS\2020\20024\20024_LAB.GPJ

GRAIN SIZE DISTRIBUTION

American Geotechnical Environmental Services Inc
4 Grandview Circle, Suite 100
Canonsburg, PA 15317
Telephone: 724-916-0300

CLIENT Mead and Hunt **PROJECT NAME** EIA - Proposed Terminal Apron Rehabilitation

PROJECT NUMBER 20024 **PROJECT LOCATION** Erie County, PA

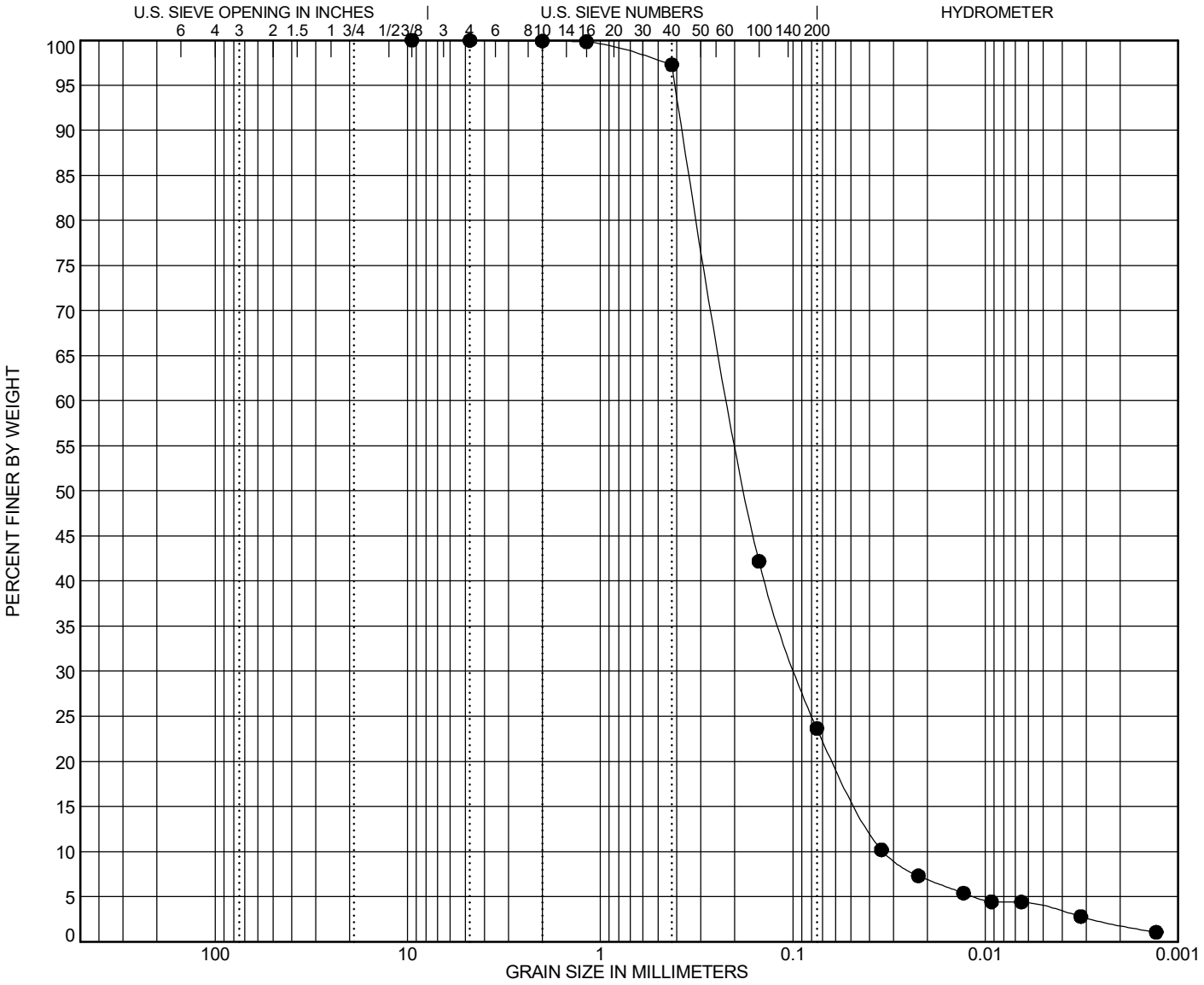

AASHTO GRAIN SIZE RANGES

COBBLES	GRAVEL	SAND	SILT OR CLAY

	Sample Location	Lab Sample ID	Date Tested	Sample Type
●	**TA-15A 33.0 - 37.5**	**20176**	**6/4/2020**	**Jars, S-22, S-23, S-24**

Classification (USCS/AASHTO)

SILTY SAND(SM) / A-2-4(0)

N.M.C.%	LL	PL	PI	D50	%Gravel	%Sand	%Silt	%Clay
22.5	**NP**	**NP**	**NP**	**0.174**	**0.1**	**76.3**	**21.8**	**1.8**

GRAIN SIZE AASHTO - 2020 - DATA ENTRY.GDT - 6/11/20 09:50 - L:_GINT\LAB TESTING\PROJECTS\2020\20024\20024_LAB.GPJ

APPENDIX C

PLOTTED BORING LOG

SUBSTRUCTURE UNIT:

BORING NUMBER:	BORING LOCATION	START: 05/26/2020 9:00 AM	HAMMER: SAFETY
TA-15A	STATION: OFFSET:	FINISH: 05/26/2020 2:00 PM	EFFICIENCY: 0.6 ERa

DRILLING METHOD AND EQUIPMENT:	SIZE OF CORE:	VERTICAL SCALE:	TOP OF BORING ELEVATION:
DRILLING METHOD-NO RECORD, SAFETY, SIMCO 2800 TRAILER	"NO RECORD"	0 FT. 5 FT.	725.3 FT.

DRILLING INSPECTOR: JEFF SCHELLER
DRILLER & DRILLING COMPANY: B. RINDFUSS
R. RINDFUSS DRILLING, L.P.

▽ 0 HR. READING - ELAPSED TIME: El. 706.2 ft. - 0.0 hr.
▼ 24 HR. READING - ELAPSED TIME: El. 714.7 ft. - 18.0 hr.

ELEV.	MATERIAL DESCRIPTION	AASHTO/ USCS	SAMPLE DEPTH	SAMPLE NO. **	BLOW COUNT ------ PP/T TSF	N 60 / %RQD	REC (ft.)	REC (%)
725	**CEMENT CONCRETE**. 0.9'/El. 724.4			PC-1			0.9	60
	SUBBASE. 1.5'/El. 723.8	a-1-b / sp	1.5	S-1	8-8-4	12	1.4	93
	Boring moved 2.0' @ 52° azimuth.		3.0	S-2	4-3-3	6	1.3	87
720	**SAND**, some Gravel, little Silt, medium dense, damp, homogeneous, brown to gray, fill. 3.0'/El. 722.3	A-2-4 / SP-SM	4.5	S-3	3-4-4	8	1.4	93
			6.0	S-4	3-4-4	8	1.5	100
			7.5	S-5	3-4-6	10	1.3	87
	SAND, trace Silt, trace Gravel, trace Clay, loose, wet to damp, homogeneous, poorly graded, brown to brown gray, glacial till. *Class. on S-3 to S-5 (4.5-9.0')* *N.M.C.=11.9%.* *Tip of S-5, spoon wet.* 9.0'/El. 716.3		9.0	S-6	3-3-3	6	0.8	53
			10.5	S-7	2-4-3	7	0.9	60
			12.0	S-8	3-5-3	8	1.1	73
	GRAVEL, some Sand, little Silt, loose to medium dense, wet, homogeneous, well graded, rounded to sub-angular, gray to dark gray, glacial till. *S-6, wet spoon.* *S-7, wet spoon.* 18.0'/El. 707.3	a-1-a / gw	13.5	S-9	5-8-6	14	1.5	100
710			15.0	S-10	5-8-12	20	1.5	100
			16.5	S-11	8-9-11	20	1.5	100
	SAND, little Silt, little Gravel, trace Clay, medium dense, wet, homogeneous, poorly graded, brown to red brown, glacial till. *Class. on S-13 to S-15 (19.5-24.0')* *N.M.C.=23.4%.* *Driller experienced heaving samples, 21.0-27.0'.* 24.0'/El. 701.3	A-2-4 / SM	18.0	S-12	5-8-7	15	1.5	100
705			19.5	S-13	3-5-7	12	1.5	100
			21.0	S-14	3-5-8	13	1.5	100
			22.5	S-15	4-5-9	14	1.5	100
	SAND, little Silt, little Gravel, trace Clay, fine grained, loose to very dense, wet to moist, homogeneous, poorly graded, light gray to gray, glacial till. *Class. on S-22 to S-24 (33.0-37.5'* *N.M.C.=22.5%.* 40.5'/El. 684.8	A-2-4 / SM	24.0	S-16	5-6-6	12	1.5	100
700			25.5	S-17	5-6-8	14	1.5	100
			27.0	S-18	5-8-9	17	1.5	100
			28.5	S-19	10-10-18	28	1.5	100
695			30.0	S-20	13-18-27	45	1.5	100
			31.5	S-21	18-27-29	56	1.5	100
			33.0	S-22	2-5-9	14	1.5	100
690			34.5	S-23	2-6-12	18	1.5	100
			36.0	S-24	10-13-15	28	1.5	100
			37.5	S-25	5-8-9	17	1.5	100
685			39.0	S-26	3-2-4	6	1.5	100

◇ RQD % ◇
⊙ Soil/Rock Rec. % ⊙
20 40 60 80
▲ SPT (N_{60}) ▲
10 20 30 40

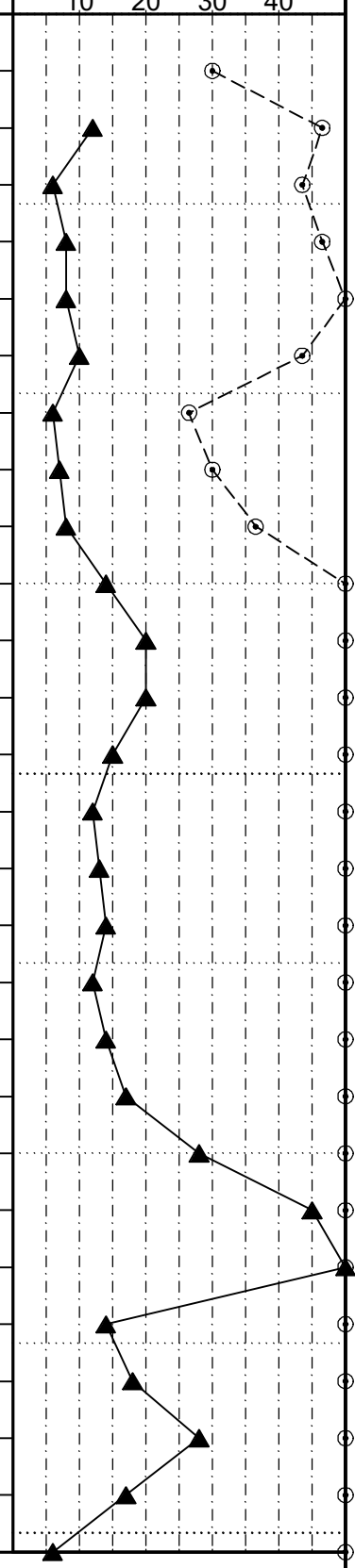

**SAMPLE NO. shading indicates lab testing performed.

PENNDOT STRUCTURE BORING LOG - PENNDOT_GINT_VERSION_1.2.2.2_8-24-2016.GDT - 12/11/20 11:05 - L:_GINT\PROJECTS\2020\20024.GPJ

Page intentionally left blank for printing purposes

FEDERAL (DAVIS-BACON) WAGE RATES

"General Decision Number: PA20210088 01/22/2021

Superseded General Decision Number: PA20200088

State: Pennsylvania

Construction Type: Building

County: Erie County in Pennsylvania.

BUILDING CONSTRUCTION PROJECTS (does not include single family homes or apartments up to and including 4 stories).

Note: Under Executive Order (EO) 13658, an hourly minimum wage of $10.95 for calendar year 2021 applies to all contracts subject to the Davis-Bacon Act for which the contract is awarded (and any solicitation was issued) on or after January 1, 2015. If this contract is covered by the EO, the contractor must pay all workers in any classification listed on this wage determination at least $10.95 per hour (or the applicable wage rate listed on this wage determination, if it is higher) for all hours spent performing on the contract in calendar year 2021. If this contract is covered by the EO and a classification considered necessary for performance of work on the contract does not appear on this wage determination, the contractor must pay workers in that classification at least the wage rate determined through the conformance process set forth in 29 CFR 5.5(a)(1)(ii) (or the EO minimum wage rate,if it is higher than the conformed wage rate). The EO minimum wage rate will be adjusted annually. Please note that this EO applies to the above-mentioned types of contracts entered into by the federal government that are subject to the Davis-Bacon Act itself, but it does not apply to contracts subject only to the Davis-Bacon Related Acts, including those set forth at 29 CFR 5.1(a)(2)-(60). Additional information on contractor requirements and worker protections under the EO is available at www.dol.gov/whd/govcontracts.

Modification Number	Publication Date
0	01/01/2021
1	01/08/2021
2	01/22/2021

BOIL0154-007 01/01/2017

	Rates	Fringes
BOILERMAKER	$ 40.90	27.27

BRPA0009-011 12/01/2020

	Rates	Fringes
TILE FINISHER	$ 26.86	16.18
TILE SETTER	$ 33.12	20.55

BRPA0009-056 11/01/2020

	Rates	Fringes
BRICKLAYER (Including Pointing, Caulking, and Cleaning)	$ 29.40	22.26

MASON - STONE.....$ 29.40 22.26

CARP0081-010 06/01/2020

	Rates	Fringes
CARPENTER (Includes Drywall Hanging, Metal Stud Installation, Floor Laying-Carpet, Vinyl, and Form Work; Excludes Acoustical Ceiling Installation).....	$ 31.10	16.57

CARP0142-012 06/01/2020

	Rates	Fringes
CARPENTER (Acoustical Ceiling Installation Only).....	$ 35.48	18.31

CARP0443-004 06/01/2020

	Rates	Fringes
MILLWRIGHT.....	$ 41.68	19.97

CARP2235-007 01/01/2021

	Rates	Fringes
PILEDRIVERMAN.....	$ 36.50	19.92

ELEC0056-006 06/01/2020

	Rates	Fringes
ELECTRICIAN (Excludes Low Voltage Wiring and Alarm Installation).....	$ 35.29	23.30

---

* ELEC0712-011 12/28/2020

	Rates	Fringes
ELECTRICIAN (Alarm Installation and Low Voltage Wiring Only).....	$ 42.05	25.85

---

* ENGI0066-043 05/01/2019

	Rates	Fringes
POWER EQUIPMENT OPERATOR		
Backhoe/Excavator/Trackhoe, Bobcat/Skid Steer/Skid Loader,Crane*, Drill Rig Caissons, Highlift, Paver (Asphalt, Aggregate, and Concrete).....	$ 30.35	17.87
Bulldozer, Compactor, Drill, Gradall, Grader/Blade, Mechanic, Forklift (Lull).....	$ 30.35	17.87
Hoist, Pump, Forklift		

(ridden or self-propelled)..$ 29.68 17.87
Loader.....$ 30.35 17.87
Oiler.....$ 25.80 17.87
Roller.....$ 29.68 17.87

*Add to Crane rate:

Booms 101-150 jibs- Add $0.29
Booms 151-200 jibs- Add $0.56
Booms over 200 jibs- Add $0.84

IRON0003-023 06/01/2020

	Rates	Fringes
IRONWORKER (Ornamental, Reinforcing, Rigger and Structural; Metal Buildings: Metal Siding/Wall Panels Installation)	$ 32.31	30.26

LABO0125-005 06/01/2014

	Rates	Fringes
LABORER		
Mason Tender - Cement/Concrete	$ 24.34	9.75

LABO0323-005 01/01/2014

	Rates	Fringes
LABORER		
Mason Tender-Brick	$ 21.92	12.81

PAIN0549-002 05/01/2020

	Rates	Fringes
PAINTER		
Brush and Roller	$ 23.32	19.71
Drywall Finishing/Taping	$ 23.57	19.71
Spray	$ 24.07	19.71

PLAS0526-013 05/01/2015

	Rates	Fringes
CEMENT MASON/CONCRETE FINISHER	$ 25.56	15.42

PLUM0027-006 06/01/2020

	Rates	Fringes
PLUMBER	$ 41.78	23.47

PLUM0449-006 06/01/2020

	Rates	Fringes
PIPEFITTER (Includes HVAC Pipe Installation)	$ 42.25	24.82

ROOF0210-007 05/01/2020

	Rates	Fringes
ROOFER (Excludes Metal Roof Installation and Waterproofing)	$ 30.60	15.79

SFPA0669-004 01/01/2021

	Rates	Fringes
SPRINKLER FITTER (Fire Sprinklers)	$ 38.90	26.69

SHEE0012-013 07/01/2020

	Rates	Fringes
SHEET METAL WORKER (Includes HVAC Duct, Metal Roof, and Metal Flashing Installation)	$ 37.96	28.05

* UAVG-PA-0024 01/01/2019

	Rates	Fringes
GLAZIER	$ 26.30	21.24

* UAVG-PA-0025 01/01/2016

	Rates	Fringes
PLASTERER	$ 25.51	13.91

SUPA2011-046 08/20/2014

	Rates	Fringes
ASBESTOS WORKER/HEAT & FROST INSULATOR - MECHANICAL (Duct, Pipe & Mechanical System Insulation)	$ 30.41	20.04
LABORER: Common or General	$ 17.40	6.93
ROOFER: Waterproofing Only	$ 26.77	12.57
TRUCK DRIVER: Dump Truck	$ 23.36	7.60

WELDERS - Receive rate prescribed for craft performing operation to which welding is incidental.

==========

Note: Executive Order (EO) 13706, Establishing Paid Sick Leave for Federal Contractors applies to all contracts subject to the Davis-Bacon Act for which the contract is awarded (and any solicitation was issued) on or after January 1, 2017. If this contract is covered by the EO, the contractor must provide employees with 1 hour of paid sick leave for every 30 hours they work, up to 56 hours of paid sick leave each year. Employees must be permitted to use paid sick leave for their own illness, injury or other health-related needs, including

preventive care; to assist a family member (or person who is like family to the employee) who is ill, injured, or has other health-related needs, including preventive care; or for reasons resulting from, or to assist a family member (or person who is like family to the employee) who is a victim of, domestic violence, sexual assault, or stalking. Additional information on contractor requirements and worker protections under the EO is available at www.dol.gov/whd/govcontracts.

Unlisted classifications needed for work not included within the scope of the classifications listed may be added after award only as provided in the labor standards contract clauses (29CFR 5.5 (a) (1) (ii)).

The body of each wage determination lists the classification and wage rates that have been found to be prevailing for the cited type(s) of construction in the area covered by the wage determination. The classifications are listed in alphabetical order of ""identifiers"" that indicate whether the particular rate is a union rate (current union negotiated rate for local), a survey rate (weighted average rate) or a union average rate (weighted union average rate).

Union Rate Identifiers

A four letter classification abbreviation identifier enclosed in dotted lines beginning with characters other than ""SU"" or ""UAVG"" denotes that the union classification and rate were prevailing for that classification in the survey. Example: PLUM0198-005 07/01/2014. PLUM is an abbreviation identifier of the union which prevailed in the survey for this classification, which in this example would be Plumbers. 0198 indicates the local union number or district council number where applicable, i.e., Plumbers Local 0198. The next number, 005 in the example, is an internal number used in processing the wage determination. 07/01/2014 is the effective date of the most current negotiated rate, which in this example is July 1, 2014.

Union prevailing wage rates are updated to reflect all rate changes in the collective bargaining agreement (CBA) governing this classification and rate.

Survey Rate Identifiers

Classifications listed under the ""SU"" identifier indicate that no one rate prevailed for this classification in the survey and the published rate is derived by computing a weighted average rate based on all the rates reported in the survey for that classification. As this weighted average rate includes all rates reported in the survey, it may include both union and non-union rates. Example: SULA2012-007 5/13/2014. SU indicates the rates are survey rates based on a weighted average calculation of rates and are not majority rates. LA indicates the State of Louisiana. 2012 is the year of survey on which these classifications and rates are based. The next number, 007 in the example, is an internal number used in producing the wage determination. 5/13/2014 indicates the survey completion date for the classifications and rates under that identifier.

Survey wage rates are not updated and remain in effect until a

new survey is conducted.

Union Average Rate Identifiers

Classification(s) listed under the UAVG identifier indicate that no single majority rate prevailed for those classifications; however, 100% of the data reported for the classifications was union data. EXAMPLE: UAVG-OH-0010 08/29/2014. UAVG indicates that the rate is a weighted union average rate. OH indicates the state. The next number, 0010 in the example, is an internal number used in producing the wage determination. 08/29/2014 indicates the survey completion date for the classifications and rates under that identifier.

A UAVG rate will be updated once a year, usually in January of each year, to reflect a weighted average of the current negotiated/CBA rate of the union locals from which the rate is based.

WAGE DETERMINATION APPEALS PROCESS

1.) Has there been an initial decision in the matter? This can be:

* an existing published wage determination
* a survey underlying a wage determination
* a Wage and Hour Division letter setting forth a position on a wage determination matter
* a conformance (additional classification and rate) ruling

On survey related matters, initial contact, including requests for summaries of surveys, should be with the Wage and Hour Regional Office for the area in which the survey was conducted because those Regional Offices have responsibility for the Davis-Bacon survey program. If the response from this initial contact is not satisfactory, then the process described in 2.) and 3.) should be followed.

With regard to any other matter not yet ripe for the formal process described here, initial contact should be with the Branch of Construction Wage Determinations. Write to:

Branch of Construction Wage Determinations
Wage and Hour Division
U.S. Department of Labor
200 Constitution Avenue, N.W.
Washington, DC 20210

2.) If the answer to the question in 1.) is yes, then an interested party (those affected by the action) can request review and reconsideration from the Wage and Hour Administrator (See 29 CFR Part 1.8 and 29 CFR Part 7). Write to:

Wage and Hour Administrator
U.S. Department of Labor
200 Constitution Avenue, N.W.
Washington, DC 20210

The request should be accompanied by a full statement of the interested party's position and by any information (wage payment data, project description, area practice material,

etc.) that the requestor considers relevant to the issue.

3.) If the decision of the Administrator is not favorable, an interested party may appeal directly to the Administrative Review Board (formerly the Wage Appeals Board). Write to:

Administrative Review Board
U.S. Department of Labor
200 Constitution Avenue, N.W.
Washington, DC 20210

4.) All decisions by the Administrative Review Board are final.

==========

END OF GENERAL DECISION"

Project Manual
Volume 2 of 2

Erie International Airport
Passenger Boarding Bridge
Gate 3

Prepared for

ERIE INTERNATIONAL AIRPORT
TOM RIDGE FIELD

Mead and Hunt, Inc. 3225600-201731.01

Prepared by

Mead & Hunt
www.meadhunt.com

Pyramid Engineering, PC

February 18, 2021 – Bid Set

WARNING: THIS RECORD CONTAINS SENSITIVE SECURITY INFORMATION THAT IS CONTROLLED IN 49 CFR PART 1520. NO PART OF THIS RECORD MAY BE DISCLOSED TO PERSONS WITHOUT A "NEED TO KNOW", AS DIRECTED IN 49 CFR PART 1520, EXCEPT WITH THE WRITTEN PERMISSION OF THE ADMINISTRATOR OR THE TRANSPORTATION SECURITY ADMINISTRATION OR THE SECRETARY OF TRANSPORTATION. UNAUTHORIZED RELEASE MAY RESULT IN CIVIL PENALTY OR OTHER ACTION. FOR US GOVERNMENT AGENCIES, PUBLIC DISCLOSURE IS GOVERNED BY 5 USC 552 AND 49 CRF PART 1520.' ALL OTHER DOCUMENTS SHALL BE MARKED OFFICIAL USE ONLY – PUBLIC AVAILABILITY TO BE DETERMINED UNDER 5 USC 552.

This page intentionally left blank.

SECTION 000110 - TABLE OF CONTENTS

DIVISION 00 - PROCUREMENT AND CONTRACTING REQUIREMENTS
000101 PROJECT TITLE PAGE
000110 TABLE OF CONTENTS

JBT PASSENGER BOARDING BRIDGE DRAWINGS – FOR REFERENCE ONLY

DIVISION 01 – GENERAL REQUIREMENTS
011000 SUMMARY
011200 MULTIPLE CONTRACT SUMMARY
012100 ALLOWANCES
012500 SUBSTITUTION PROCEDURES
012600 CONTRACT MODIFICATION PROCEDURES
013100 PROJECT MANAGEMENT AND COORDINATION
013300 SUBMITTAL PROCEDURES
013516 ALTERATION PROJECT PROCEDURES
014000 QUALITY REQUIREMENTS
015000 TEMPORARY FACILITIES AND CONTROLS
017700 CLOSEOUT PROCEDRUES
017839 PROJECT RECORD DOCUMENTS

DIVISION 02 - EXISTING CONDITIONS
024119 SELECTIVE DEMOLITION

DIVISION 03 - CONCRETE
032000 CONCRETE REINFORCING
033000 CAST-IN-PLACE CONCRETE

DIVISION 04 - MASONRY
NOT APPLICABLE

DIVISION 05 – METALS
051200 STRUCTURAL STEEL FRAMING
053100 STEEL DECKING
054000 COLD FORMED METAL FRAMING

DIVISION 06 - WOOD, PLASTICS, AND COMPOSITES
061053 MISCELLANEOUS ROUGH CARPENTRY
061600 SHEATHING

DIVISION 07 - THERMAL AND MOISTURE PROTECTION
072100 THERMAL INSULATION
072726 FLUID-APPLIED MEMBRANE AIR BARRIERS
074213 ALUMINUM COMPOSITE PANELS
076200 SHEET METAL FLASHING AND TRIM
078413 PENETRATION AND JOINT FIRESTOPPING
079200 JOINT SEALANTS

DIVISION 08 - OPENINGS
081113 HOLLOW METAL DOORS & FRAMES
087100 DOOR HARDWARE

DIVISION 09 - FINISHES
092900 GYPSUM BOARD

096513 RESILIENT BASE AND ACCESSORIES
099113 EXTERIOR PAINTING
099123 INTERIOR PAINTING

DIVISION 10 - SPECIALTIES
101423 ROOM-IDENTIFICATION SIGNAGE

DIVISIONS 11 THROUGH 25
NOT APPLICABLE

DIVISION 26 - ELECTRICAL
260500 COMMON WORK RESULTS FOR ELECTRICAL
260510 ELECTRICAL ACCEPTANCE TESTING
260519 LOW-VOLTAGE ELECTRICAL POWER CONDUCTORS AND CABLES
260526 GROUNDING AND BONDING FOR ELECTRICAL SYSTEMS
260529 HANGERS AND SUPPORTS FOR ELECTRICAL SYSTEMS
260532 BOXES
260533 CONDUIT
260553 IDENTIFICATION FOR ELECTRICAL SYSTEMS
260573 OVERCURRENT PROTECTIVE DEVICE COORDINATION STUDY
262213 LOW VOLTAGE TRANSFORMERS
262413 SWITCHBOARDS
262716 ELECTRICAL CABINETS AND ENCLOSURES
262816 ENCLOSED SWITCHES AND CIRCUIT BREAKERS

DIVISION 27
NOT APPLICABLE

DIVISION 28
280500 COMMON WORK RESULTS FOR ELECTRONIC SAFETY AND SECURITY
280513 CONDUCTORS AND CABLES FOR ELECTRONIC SAFETY AND SECURITY SYSTEMS
280528 PATHWAYS FOR ELECTRONIC SAFETY AND SECURITY SYSTEMS

DIVISIONS 29 THROUGH 30
NOT APPLICABLE

DIVISION 31 - EARTHWORK
311000 SITE CLEARING
312000 EARTH MOVING
312319 DEWATERING
315000 EXCAVATION SUPPORT AND PROTECTION

END OF SECTION 000101

Submittal
FAZ-ERI

Drawing Number	Dwg Rev.	Dwg Desc.
Ld30.3184	C	AIRPORT PLANNING LAYOUT
FAZ-ERI_M	A	MECHANICAL PBB SUBMITTAL DRAWINGS
2722905	A	FIELD ERECTION JETWALK SN 34764
2723076	A	FIELD ERECTION JETWALK SN 34765
2723085	A	FIELD ERECTION JETWALK SN 34766
FAZ-ERI_E	A	ELECTRICAL SUBMITTAL DRAWINGS
FAZ-ERI_J	A	JETPOWER SUBMITTAL DRAWINGS

FOR REFERENCE ONLY

FOR REFERENCE ONLY

NOTES:

1. REFERENCE CUSTOMER SUPPLIED DRAWING(S) IDENTIFIED AS FOLLOWS:
   A) AUTOCAD FILES IDENTIFIED AS "basemap" and "CL"
   B) PDF DRAWING IDENTIFIED AS "2001 Jetway Survey west"
2. REFERENCE THE ASSOCIATED LD30.3184-A DATA MATRIX FOR STAND/GATE DATA, AIRCRAFT DATA, ALL PASSENGER BOARDING BRIDGE DATA (MODELS, SLOPES, ETC), AND CALCULATED DATA/INFORMATION.
3. GATE 1 AND GATE 5 TO HAVE AIRCRAFT POSITIONS RELOCATED AS SHOWN.
4. EXITING GATE 6 AND GATE 7 AIRCRAFT POSITIONS TO REMAIN.

JBT AeroTech Jetway® Systems
JBT AeroTech JETWAY SYSTEMS
1805 WEST 2550 SOUTH
OGDEN, UTAH USA 84401
PH. 801 629 3300
www.jbtcorporation.com
www.jbtaerotech.com

THIS DRAWING AND ANY ASSOCIATED INFORMATION OR AMENDMENTS ARE PROPRIETARY AND CONFIDENTIAL TO JETWAY. THE DRAWING AND INFORMATION MAY ONLY BE USED FOR THE SPECIFIC CONTRACT UNDER WHICH IT IS DELIVERED AND ONLY BY THE PURCHASER. ACCEPTANCE OF THE DRAWING AND INFORMATION CONSTITUTES AGREEMENT NOT TO REPRODUCE IT IN WHOLE OR IN PART AND NOT TO DISCLOSE IT TO ANY OTHER PARTY AND NOT TO USE IT FOR ANY PURPOSE BEYOND THE LIMITED LICENSE GRANTED HEREIN WITHOUT PRIOR WRITTEN CONSENT.

© 2012 JBT AeroTech

RELEASE/REVISION INFORMATION:

REV.	DATE	DRN.	DESCRIPTION
A	11-24-20	DAD	REVISED DRAWING TO CHANGE PBB/WWY CALL-OUTS TO GLASS AND ADD LOAD SHEET NO'S AND ADD NOTE 7 TO SHEET 3.
B	12-09-20	DAD	REVISED SHEET 3 TO UPDATE AND ADD ELEV'S AND TO UPDATE NOTE 7.
C	01-13-21	DAD	REVISED SHEET 3 TO MOVE THE WWY SUPPORT POSITIONS ON JT-34-BB AND UPDATE ELEV'S.

AIRPORT/LOCATION:

(ERI) ERIE INT'L AIRPORT
TOM RIDGE FIELD

DRAWING DESCRIPTION:

AIRCRAFT AND PBB LAYOUT

NCS SHEET IDENTIFICATION: (IF REQUIRED)

DIS | SHT DSGN | SHT No | REV

RQ No.	PROJECT CODE:	
3753	ERI/ERI	
DWG No.	SHT No.	REV.
LD30.3184	1	C
DRAWN BY:	APPROVED BY:	DATE:
DAD	XXX	12 MAY 2020
CODE IDENT No.	DRAWING SCALE:	
54077	NTS	

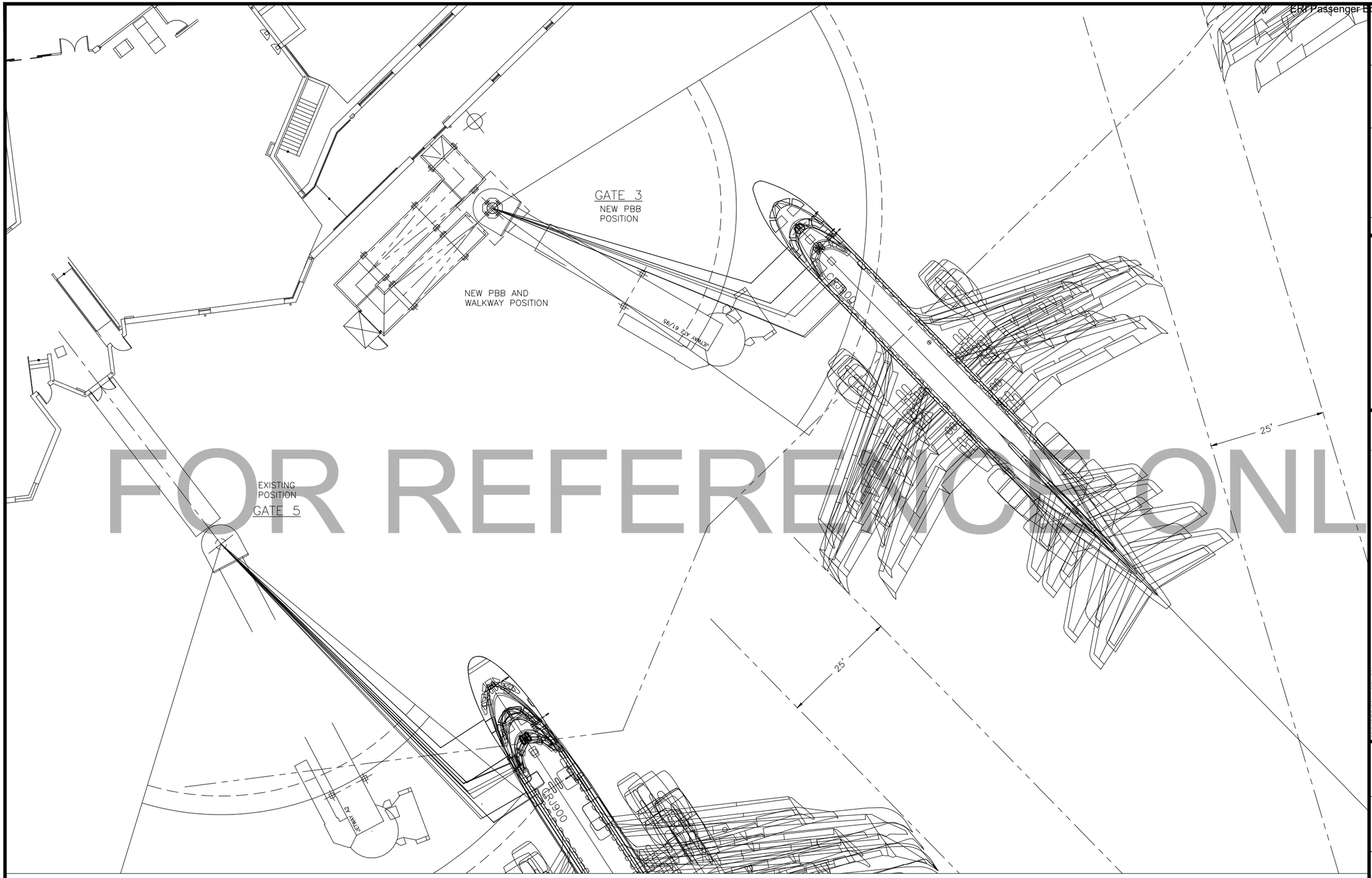

FOR REFERENCE ONLY

NOTES:

1. REFERENCE CUSTOMER SUPPLIED DRAWING(S) IDENTIFIED AS FOLLOWS:
   A) AUTOCAD FILES IDENTIFIED AS "basemap" and "CL"
   B) PDF DRAWING IDENTIFIED AS "2001 Jetway Survey west"
2. REFERENCE THE ASSOCIATED LD30.3184–A DATA MATRIX FOR STAND/GATE DATA, AIRCRAFT DATA, ALL PASSENGER BOARDING BRIDGE DATA (MODELS, SLOPES, ETC), AND CALCULATED DATA/INFORMATION.
3. GATE 1 AND GATE 5 TO HAVE AIRCRAFT POSITIONS RELOCATED AS SHOWN.
4. EXITING GATE 6 AND GATE 7 AIRCRAFT POSITIONS TO REMAIN.

JBT AeroTech
Jetway® Systems

JBT AeroTech JETWAY SYSTEMS
1805 WEST 2550 SOUTH
OGDEN, UTAH USA 84401
PH. 801 629 3300
www.jbtcorporation.com
www.jbtaerotech.com

THIS DRAWING AND ANY ASSOCIATED INFORMATION OR AMENDMENTS ARE PROPRIETARY AND CONFIDENTIAL TO JETWAY. THE DRAWING AND INFORMATION MAY ONLY BE USED FOR THE SPECIFIC CONTRACT UNDER WHICH IT IS DELIVERED AND ONLY BY THE PURCHASER. ACCEPTANCE OF THE DRAWING AND INFORMATION CONSTITUTES AGREEMENT NOT TO REPRODUCE IT IN WHOLE OR IN PART AND NOT TO DISCLOSE IT TO ANY OTHER PARTY AND NOT TO USE IT FOR ANY PURPOSE BEYOND THE LIMITED LICENSE GRANTED HEREIN WITHOUT PRIOR WRITTEN CONSENT.

© 2012 JBT AeroTech

RELEASE/REVISION INFORMATION:

REV.	DATE	DRN.	DESCRIPTION
A	11–24–20	DAD	REVISED DRAWING TO CHANGE PBB/WWY CALL–OUTS TO GLASS AND ADD LOAD SHEET NO'S AND ADD NOTE 7 TO SHEET 3.
B	12–09–20	DAD	REVISED SHEET 3 TO UPDATE AND ADD ELEV'S AND TO UPDATE NOTE 7.
C	01–13–21	DAD	REVISED SHEET 3 TO MOVE THE WWY SUPPORT POSITIONS ON JT–34–BB AND UPDATE ELEV'S.

AIRPORT/LOCATION:

(ERI) ERIE INT'L AIRPORT
TOM RIDGE FIELD

DRAWING DESCRIPTION:

AIRCRAFT AND PBB
LAYOUT

NCS SHEET IDENTIFICATION: (IF REQUIRED)

DIS	SHT DSGN	SHT No	REV

RQ No.	PROJECT CODE:	
3753	ERI/ERI	
DWG No.	SHT No.	REV.
LD30.3184	2	C
DRAWN BY:	APPROVED BY:	DATE:
DAD	XXX	12 MAY 2020
CODE IDENT No.	DRAWING SCALE:	
54077	NTS	

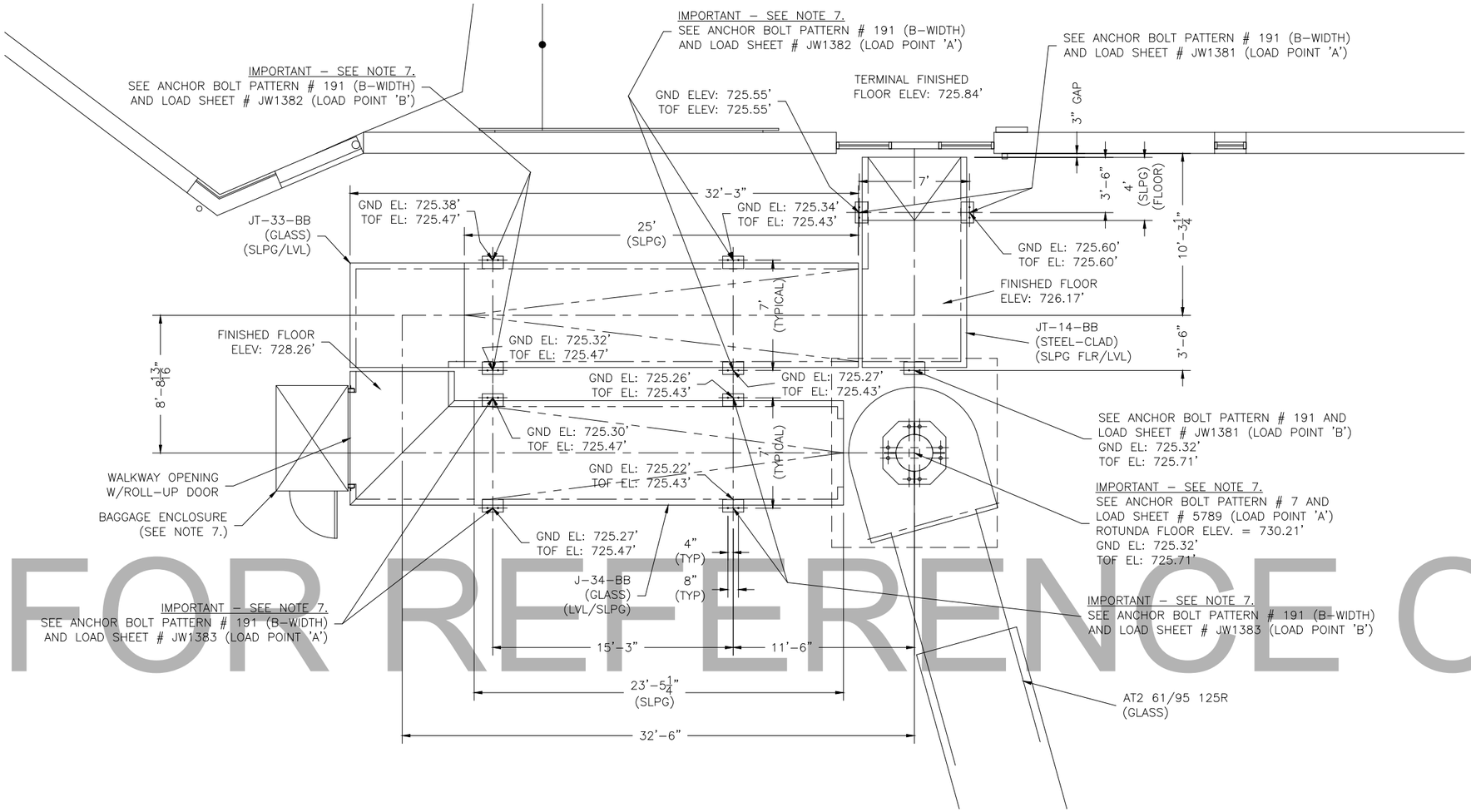

GATE 3

NOTES:

1. REFERENCE CUSTOMER SUPPLIED DRAWINGS/INFORMATION:
   A) AUTOCAD FILES IDENTIFIED AS "basemap" and "CL"
   B) PDF DRAWING IDENTIFIED AS "2001 Jetway Survey west"
2. SEE FOUNDATION ENGINEER FOR ANCHOR BOLT LENGTH AND ANCHORAGE.
3. ASSUME ALL ANGLES TO BE 90° UNLESS NOTED OTHERWISE.
4. ORIENT AND ROTATE ANCHOR BOLT PATTERNS AS SHOWN.
5. DIMENSION FROM TERMINAL FINISHED FLOOR–TO–TOP OF FOUNDATION AND/OR APRON AT COLUMN LOCATIONS TO BE SUPPLIED TO JETWAY BY THE CUSTOMER, UNLESS OTHERWISE AGREED UPON.
6. JETWAY SYSTEMS MAKES NOT REPRESENTATION NOR PROVIDES ANY GUARANTEE AS TO THE SUITABILITY OR CONDITION OF ANY FOUNDATION THAT IS INTENDED TO BE USED TO SUPPORT THE PASSENGER BOARDING BRIDGE(S).
7. PBB AND WALKWAY ANCHOR BOLTS TO BE CAST IN FOUNDATIONS BY OTHERS WITH TOP OF FOUNDATIONS TO BE SET AS LISTED. BAGGAGE ENCLOSURE ANCHOR BOLTS TO BE PROVIDED BY JBT–JETWAY AND EPOXY INSTALLED AS PART OF BAGGAGE ENCLOSURE INSTALLATION.

FOR REFERENCE ONLY

JBT AeroTech
Jetway® Systems

JBT AeroTech JETWAY SYSTEMS
1805 WEST 2550 SOUTH
OGDEN, UTAH USA 84401
PH. 801 629 3300
www.jbtcorporation.com
www.jbtaerotech.com

THIS DRAWING AND ANY ASSOCIATED INFORMATION OR AMENDMENTS ARE PROPRIETARY AND CONFIDENTIAL TO JETWAY. THE DRAWING AND INFORMATION MAY ONLY BE USED FOR THE SPECIFIC CONTRACT UNDER WHICH IT IS DELIVERED AND ONLY BY THE PURCHASER. ACCEPTANCE OF THE DRAWING AND INFORMATION CONSTITUTES AGREEMENT NOT TO REPRODUCE IT IN WHOLE OR IN PART AND NOT TO DISCLOSE IT TO ANY OTHER PARTY AND NOT TO USE IT FOR ANY PURPOSE BEYOND THE LIMITED LICENSE GRANTED HEREIN WITHOUT PRIOR WRITTEN CONSENT.

© 2012 JBT AeroTech

RELEASE/REVISION INFORMATION:

REV.	DATE	DRN.	DESCRIPTION
A	11–24–20	DAD	REVISED DRAWING TO CHANGE PBB/WWY CALL–OUTS TO GLASS AND ADD LOAD SHEET NO'S AND ADD NOTE 7 TO SHEET 3.
B	12–09–20	DAD	REVISED SHEET 3 TO UPDATE AND ADD ELEV'S AND TO UPDATE NOTE 7.
C	01–13–21	DAD	REVISED SHEET 3 TO MOVE THE WWY SUPPORT POSITIONS ON JT–34–BB AND UPDATE ELEV'S.

AIRPORT/LOCATION:

(ERI) ERIE INT'L AIRPORT
TOM RIDGE FIELD

DRAWING DESCRIPTION:

GATE 3 PBB & WWY
FOUNDATION LOCATIONS

NCS SHEET IDENTIFICATION: (IF REQUIRED)

DIS | SHT DSGN | SHT No | REV

RQ No.	PROJECT CODE:		
3753	ERI/ERI		
DWG No.		SHT No.	REV.
LD30.3184		3	C
DRAWN BY:	APPROVED BY:	DATE:	
DAD	XXX	12 MAY 2020	
CODE IDENT No.	DRAWING SCALE:		
54077	NTS		

NOTES:

1. DIMENSION ARE THUS: FEET-INCHES / MILLIMETERS

REVISION HISTORY

SHEET	ZONE	REV	DESCRIPTION	ECO NO.	DATE	APPROVED
-	-	A	INITIAL RELEASE	N/A	2-2-2021	EDW

Erie International Airport
Erie, Pennsylvania (ERI)

JBT Corporation, Jetway Systems

DRAWING INDEX	
DRAWING NUMBER	DRAWING TITLE
CS-1	EQUIPMENT CONFIGURATION
D-1	DIMENSIONAL DRAWING - A2 MODEL
GA-1	GENERAL ARRANGEMENT - A2 MODEL
SD-1	WEATHERING, ROTUNDA TO TERMINAL BUILDING
SD-2	ROTUNDA ELEVATION & INTERIOR
SD-3	TUNNEL WEATHERING
SD-4	TUNNEL WEATHERING DETAILS
SD-5	INTERIOR FINISH ELEVATION
SD-6	INTERIOR FINISH DETAILS - A TUNNEL
SD-7	INTERIOR FINISH DETAILS - A TUNNEL
SD-10	INTERIOR FINISH DETAILS - B TUNNEL
SD-11	INTERIOR FINISH DETAILS - B TUNNEL
SD-12	INTERIOR FINISH COMMON DETAILS
SD-13	INTERIOR FINISH COMMON DETAILS
SD-14	GUTTER SAFETY STRIPING
SD-15	FRONT VIEW OF CAB
SD-16	BUBBLE, CAB & AIRCRAFT CLOSURE
SD-17	AIRCRAFT CLOSURE
SD-18	TYPICAL AIRCRAFT INTERFACE & OPERATOR CONE OF VIEW
SD-19	MECHANICAL & ELECTRICAL LIMITS
SD-20	SERVICE DOOR DETAILS
SD-21	STAIR & LANDING DETAILS
SP-3	LOWER DRIVE COLUMN (FOR ELECTRO-MECH UPPER)
SP-4	VERTICAL DRIVE COLUMN (10'0 ELECTRO-MECHANICAL)
SP-5	400 Hz JETPOWER CABLE HOISTS

GATE EQUIPMENT CONFIGURATION					
GATE NO.	PASSENGER BOARDING BRIDGE	JETWALK	400 HZ	PRE-CONDITIONED AIR	BAG VALET
3	AT2-61/95-125R-GLASS SN 34763	JT-14-BB STEEL CLAD SN 34764 JT-33-BB GLASS SN 34765 JT-34-BB GLASS SN 34766	90KVA/28VDC JTP3 SN 46832	SJ-70 SN 66214	SN 93908

EXTERIOR FINISH COLOR
ARCTIC WHITE (SHERWIN WILLIAMS #F63WV7)
ROLL UP CURTAINS: GALVANIZED STEEL, ARCTIC SILVER COATING
INTERIOR FINISH COLORS
GLASS COLOR: TBD
CEILING: WHITE, HUNTER DOUGLAS, BOX 8 SERIES
PBB FLOOR COVERING: TBD
RAMP COVERING: BLACK RIBBED RUBBER (FIRE RESISTANT)
CAB/BUBBLE FLOOR FINISH: BLACK RIBBED RUBBER (FIRE RESISTANT)
INTERIOR SUB-FLOORING
TUNNELS AND ROTUNDA: 3/4" MARINE GRADE PLYWOOD
BUBBLE: 3/4" MARINE GRADE PLYWOOD
CAB FLOOR: ALUMINUM WITH DEICER WITH THERMOSTAT
TUNNEL TRANSITION RAMPS: STEEL (PAINTED SAFETY YELLOW)

NOT FOR REFERENCE ONLY

UNLESS OTHERWISE SPECIFIED
ANG ±1° FRACTIONAL ±1/16
2 PL ±.06 3 PL ±.030
HOLES & SLOTS ±.015
MM 0 PL ±1.5 1 PL ±.75
INTERPRET DIM AND TOL PER ASME Y14.5-2009
THIRD ANGLE PROJECTION

DRFTR EDW DATE 02-02-2021
CHKD - DATE -
APVD - DATE -

THIS DOCUMENT CONTAINS INFORMATION THAT IS PROPRIETARY AND CONFIDENTIAL TO JOHN BEAN TECHNOLOGIES CORPORATION AND ITS AFFILIATES, AND MAY NOT BE PUBLICLY DISCLOSED WITHOUT THE EXPRESS WRITTEN PERMISSION OF JOHN BEAN TECHNOLOGIES CORPORATION. UNDER ANY U.S. GOVERNMENT PRIME CONTRACT THIS INFORMATION SHALL BE CONSIDERED TO BE "LIMITED RIGHTS DATA".
© 2021 JBT

Jetway®Systems
Ogden, UT, U.S.A.

TITLE
SUBMITTAL: APRON DRIVE
ERIE INT'L AIRPORT

SIZE	CAGE CODE	DWG NO.	PROJECT	REV
D	54077	CS-1	FAZ-ERI_M	A

SCALE: NONE WEIGHT: LB: - KG: -

AUTOCAD

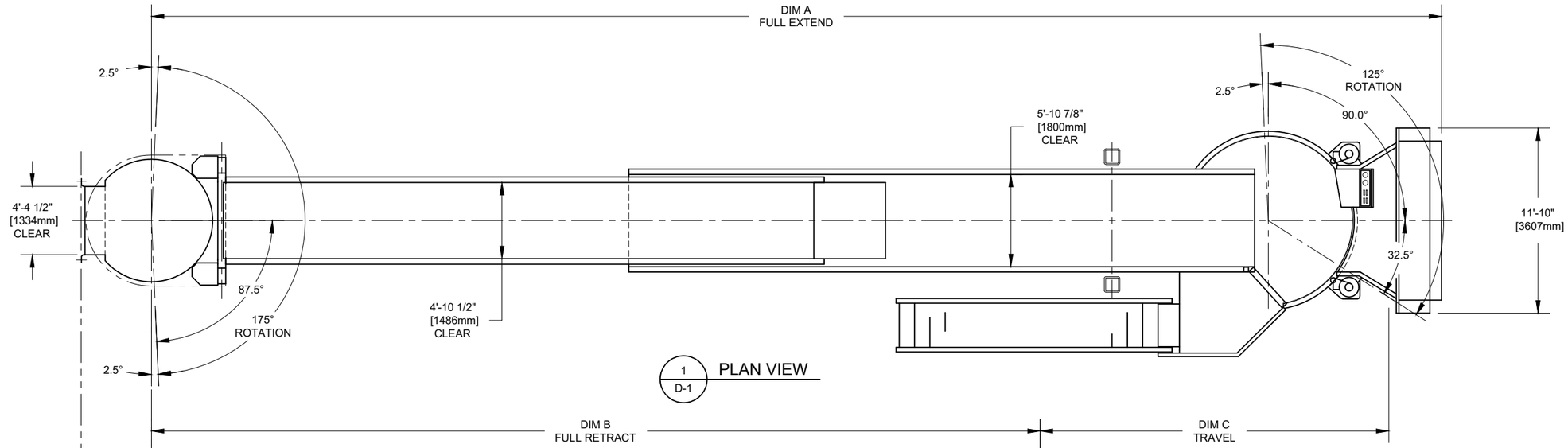

1 / D-1 PLAN VIEW

FOR REFERENCE ONLY

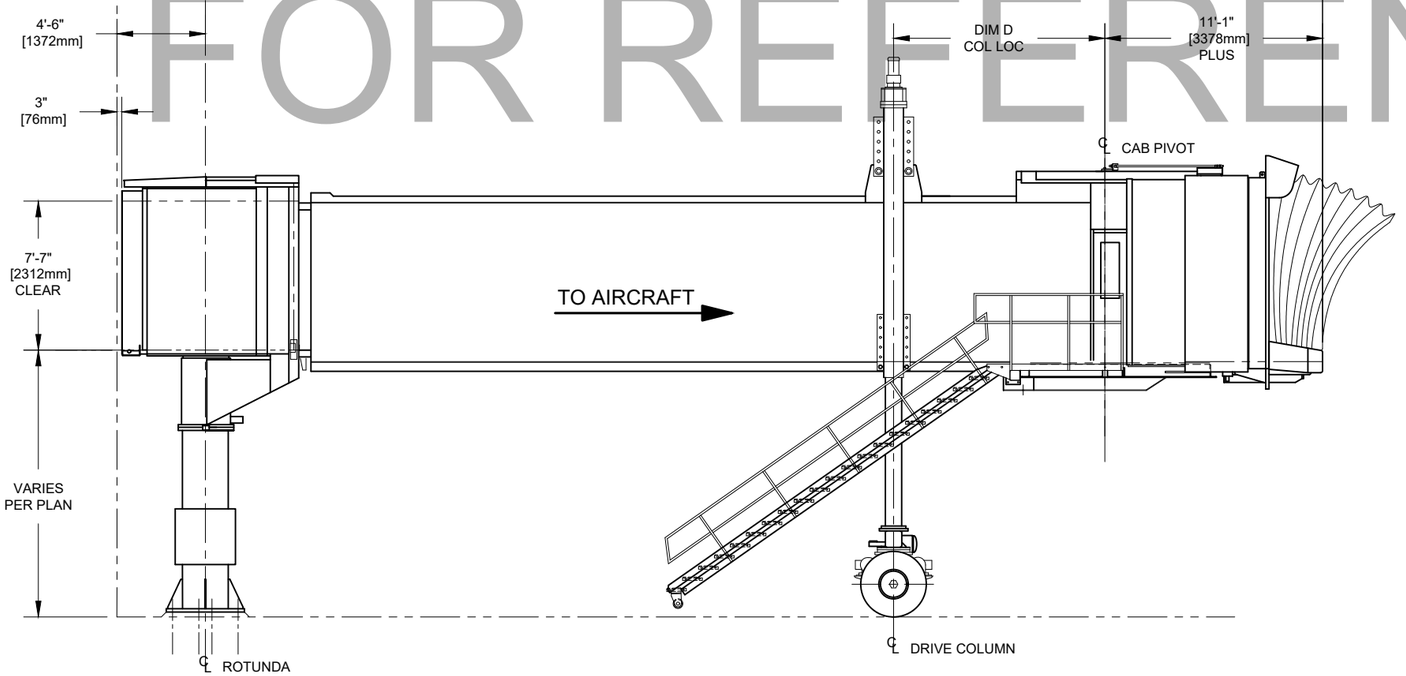

2 / D-1 RIGHT SIDE ELEVATION

DIMENSION TABLE A3				
MODEL NUMBER	A EXTEND	B RETRACT	C TRAVEL	D COL LOC
AT2-61/95	95-0 28956mm	60'-1 1/4 18320mm	34'-10 3/4 10636mm	15'-9 4801mm

DIMENSIONAL DRAWING - A2

UNLESS OTHERWISE SPECIFIED
ANG ±1° FRACTIONAL ±1/16
2 PL ±.06 3 PL ±.030
HOLES & SLOTS ±.015
MM 0 PL ±1.5 1 PL ±.75
INTERPRET DIM AND TOL PER
ASME Y14.5-2009
THIRD ANGLE PROJECTION

DRFTR EDW DATE 02-02-2021
CHKD - DATE -
APVD - DATE -

THIS DOCUMENT CONTAINS INFORMATION THAT IS PROPRIETARY AND CONFIDENTIAL TO JOHN BEAN TECHNOLOGIES CORPORATION AND ITS AFFILIATES, AND MAY NOT BE PUBLICLY DISCLOSED WITHOUT THE EXPRESS WRITTEN PERMISSION OF JOHN BEAN TECHNOLOGIES CORPORATION. UNDER ANY U.S. GOVERNMENT PRIME CONTRACT THIS INFORMATION SHALL BE CONSIDERED TO BE "LIMITED RIGHTS DATA".
© 2021 JBT

Jetway®Systems
Ogden, UT, U.S.A.

TITLE
SUBMITTAL: APRON DRIVE
ERIE INT'L AIRPORT

SIZE	CAGE CODE	DWG NO.	PROJECT	REV
D	54077	D-1	FAZ-ERI_M	A

SCALE: NONE WEIGHT: LB: - KG: -

AUTOCAD

FOR REFERENCE ONLY

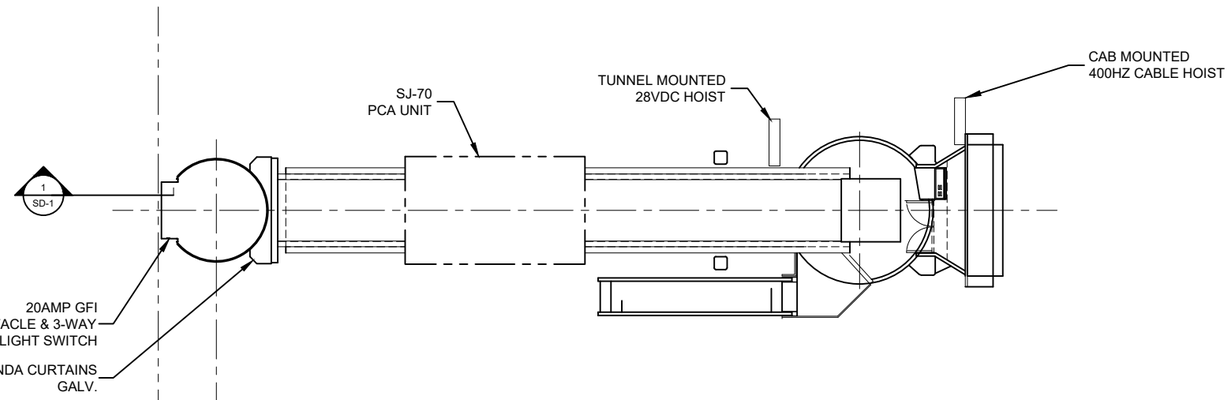

1 GA-1 PLAN VIEW
FULL RETRACT

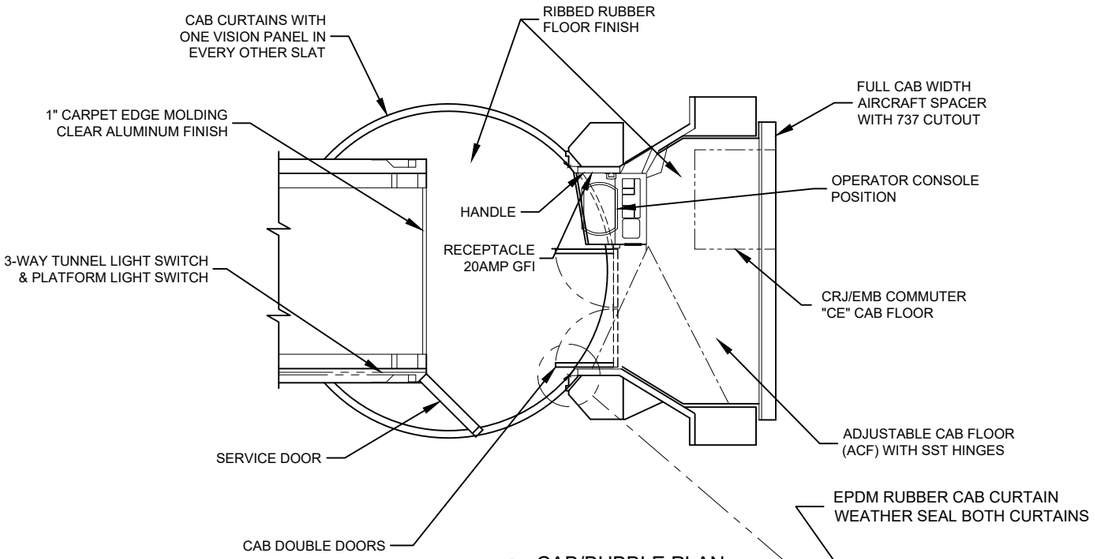

3 GA-1 CAB/BUBBLE PLAN
SEE SD-16 FOR AIRCRAFT
CLOSURE DETAILS

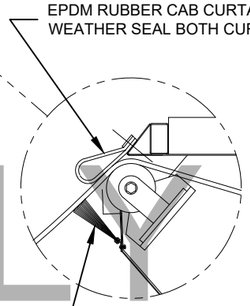

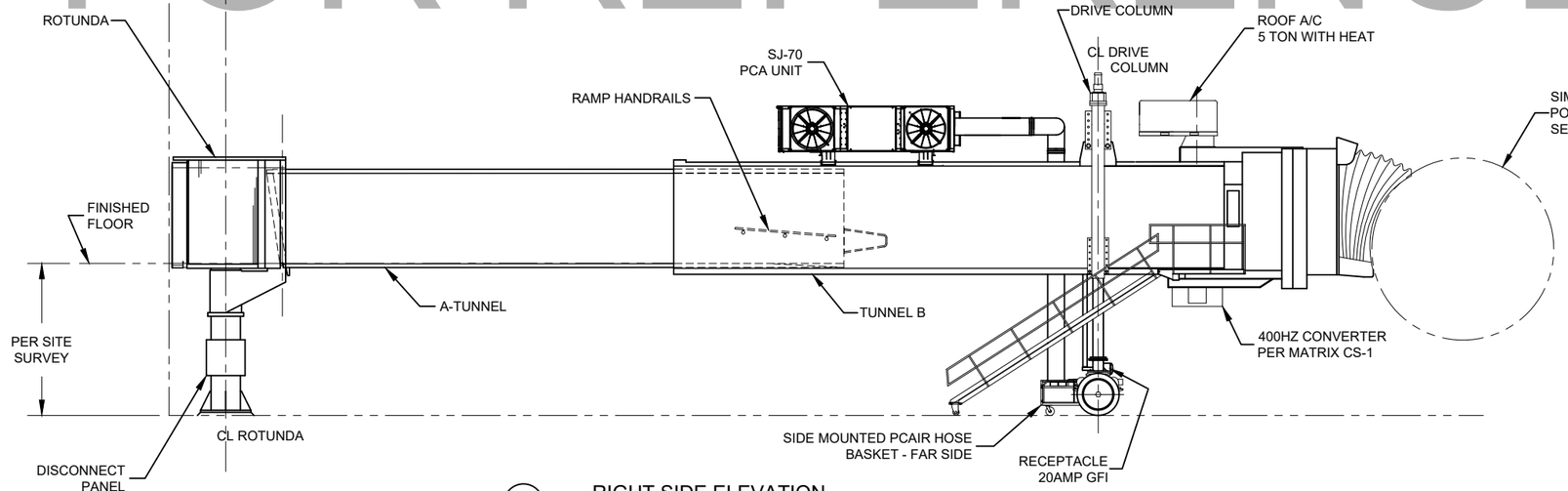

2 GA-1 RIGHT SIDE ELEVATION
FULL EXTEND

TO AIRCRAFT

GENERAL ARRANGEMENT - A2 LS TAD

UNLESS OTHERWISE SPECIFIED
ANG ±1° FRACTIONAL ±1/16
2 PL ±.06 3 PL ±.030
HOLES & SLOTS ±.015
MM 0 PL ±1.5 1 PL ±.75
INTERPRET DIM AND TOL PER
ASME Y14.5-2009

THIRD ANGLE PROJECTION

DRFTR	EDW	DATE	02-02-2021
CHKD	-	DATE	-
APVD	-	DATE	-

THIS DOCUMENT CONTAINS INFORMATION THAT IS PROPRIETARY AND CONFIDENTIAL TO JOHN BEAN TECHNOLOGIES CORPORATION AND ITS AFFILIATES, AND MAY NOT BE PUBLICLY DISCLOSED WITHOUT THE EXPRESS WRITTEN PERMISSION OF JOHN BEAN TECHNOLOGIES CORPORATION. UNDER ANY U.S. GOVERNMENT PRIME CONTRACT THIS INFORMATION SHALL BE CONSIDERED TO BE "LIMITED RIGHTS DATA".
© 2021 JBT

Jetway®Systems
Ogden, UT, U.S.A.

TITLE
SUBMITTAL: APRON DRIVE
ERIE INT'L AIRPORT

SIZE	CAGE CODE	DWG NO.	PROJECT	REV
D	54077	GA-1	FAZ-ERI_M	A

SCALE: NONE WEIGHT: LB: - KG: -

AUTOCAD

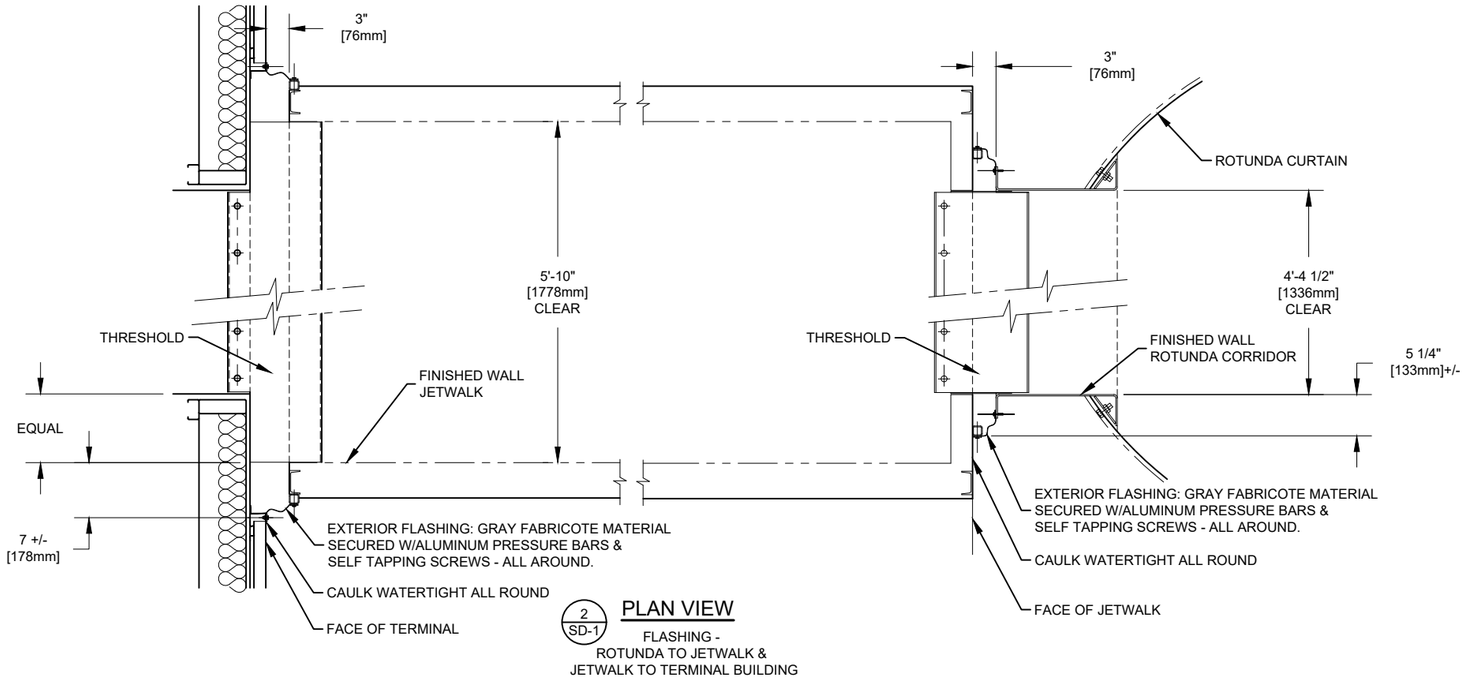

2 SD-1 **PLAN VIEW**

FLASHING -
ROTUNDA TO JETWALK &
JETWALK TO TERMINAL BUILDING

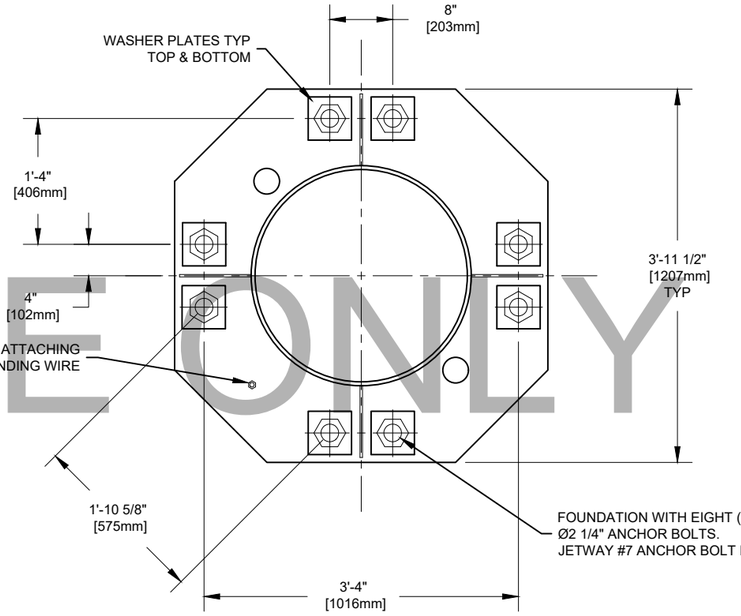

3 SD-1 **ROTUNDA ANCHOR**

PLAN VIEW ROTUNDA COLUMN

FOR REFERENCE ONLY

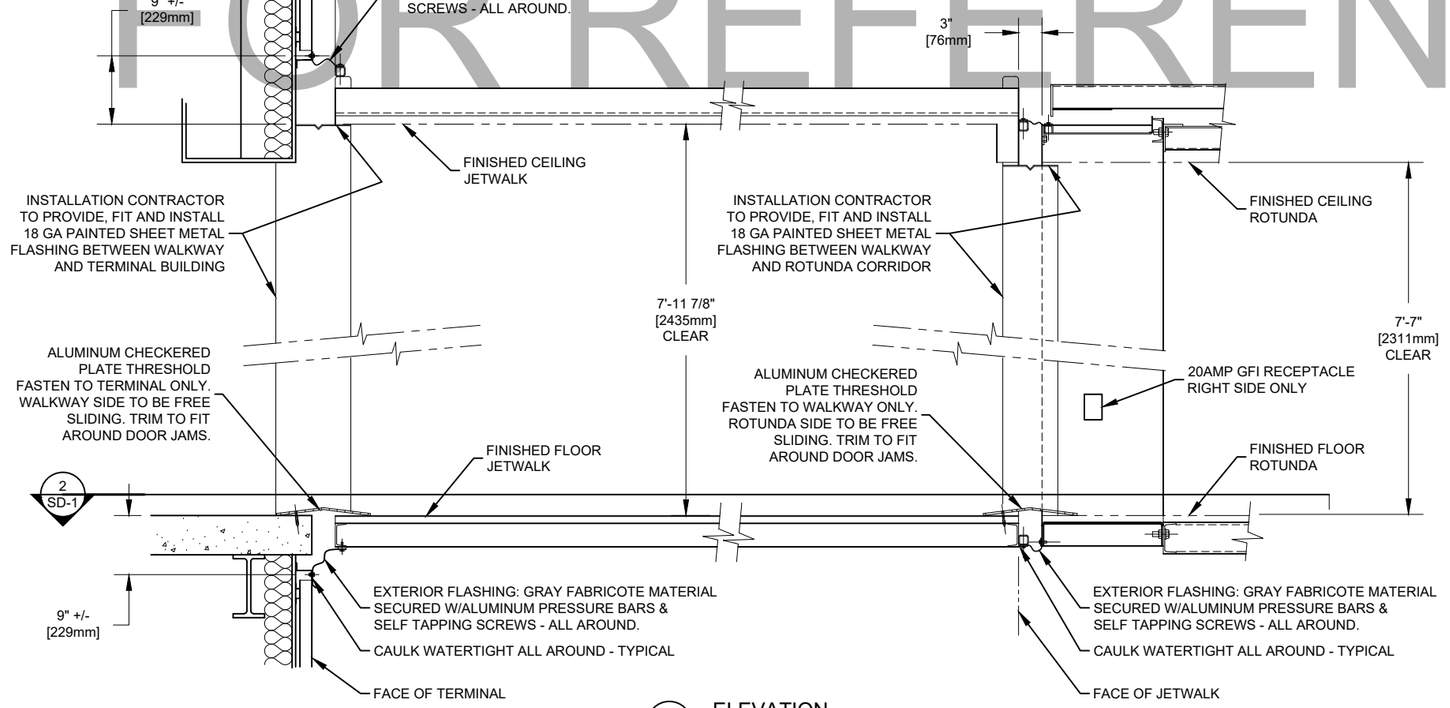

1 SD-1 **ELEVATION**

FLASHING -
ROTUNDA TO JETWALK &
JETWALK TO TERMINAL BUILDING

WEATHERING, WALKWAY TO TERMINAL

UNLESS OTHERWISE SPECIFIED
ANG ±1° FRACTIONAL ±1/16
2 PL ±.06 3 PL ±.030
HOLES & SLOTS ±.015
MM 0 PL ±1.5 1 PL ±.75
INTERPRET DIM AND TOL PER
ASME Y14.5-2009
THIRD ANGLE PROJECTION

DRFTR	EDW	DATE	02-02-2021
CHKD	-	DATE	-
APVD	-	DATE	-

THIS DOCUMENT CONTAINS INFORMATION THAT IS PROPRIETARY AND CONFIDENTIAL TO JOHN BEAN TECHNOLOGIES CORPORATION AND ITS AFFILIATES, AND MAY NOT BE PUBLICLY DISCLOSED WITHOUT THE EXPRESS WRITTEN PERMISSION OF JOHN BEAN TECHNOLOGIES CORPORATION. UNDER ANY U.S. GOVERNMENT PRIME CONTRACT THIS INFORMATION SHALL BE CONSIDERED TO BE "LIMITED RIGHTS DATA".
© 2021 JBT

Jetway®Systems
Ogden, UT, U.S.A.

TITLE
SUBMITTAL: APRON DRIVE
ERIE INT'L AIRPORT

SIZE	CAGE CODE	DWG NO.	PROJECT	REV
D	54077	SD-1	FAZ-ERI_M	A

SCALE: NONE
WEIGHT: LB: - KG: -

AUTOCAD

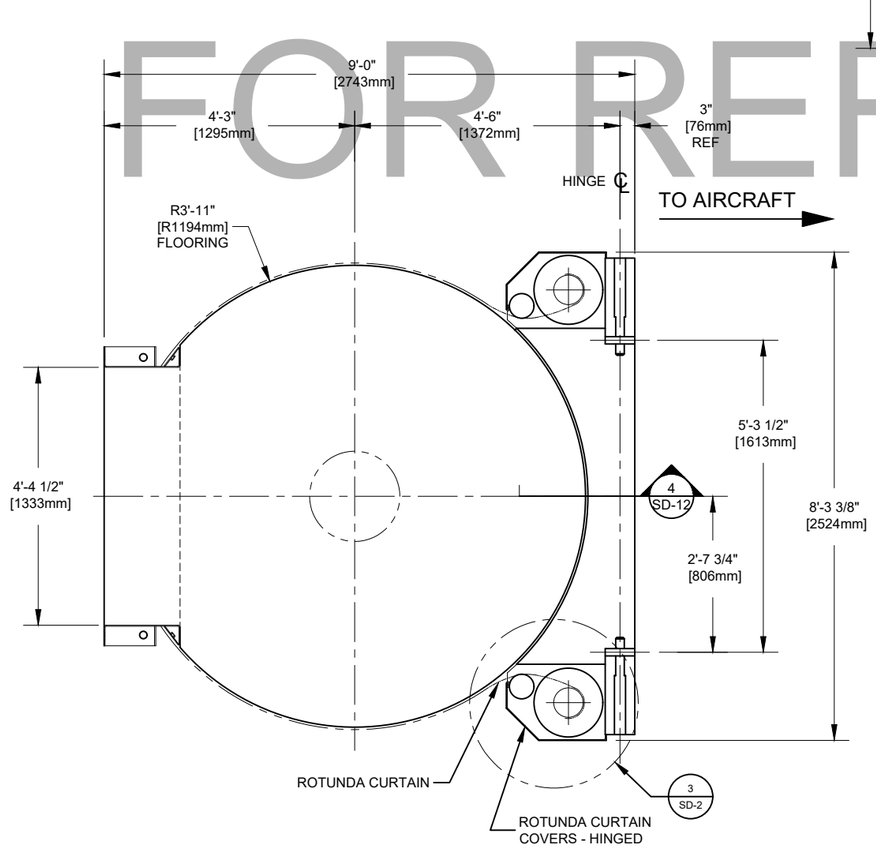

2 SD-2 ROTUNDA FLOOR PLAN

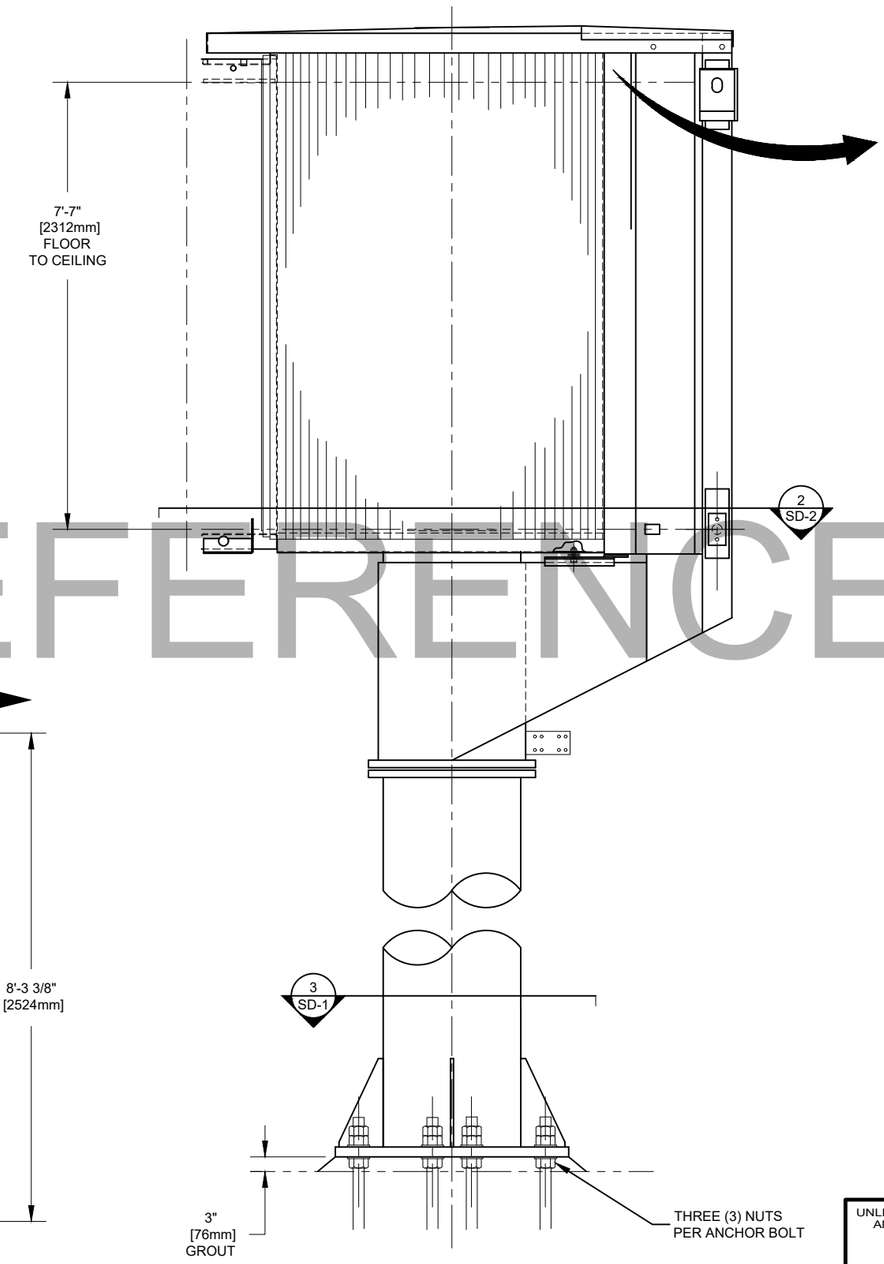

1 SD-2 RIGHT SIDE ROTUNDA ELEVATION

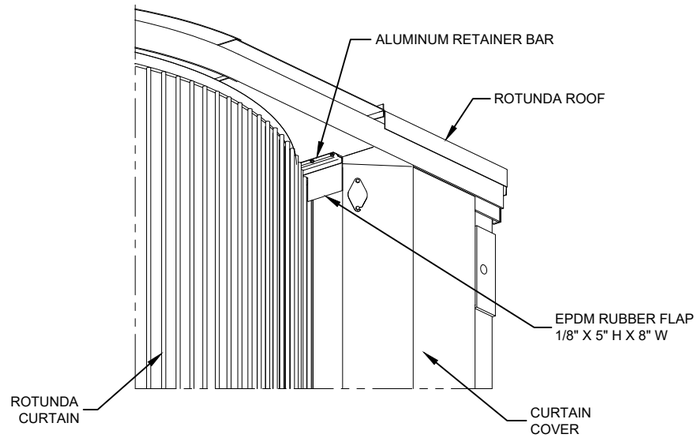

ROTUNDA CURTAIN BIRD NESTING PREVENTION
TYPICAL RIGHT & LEFT SIDES

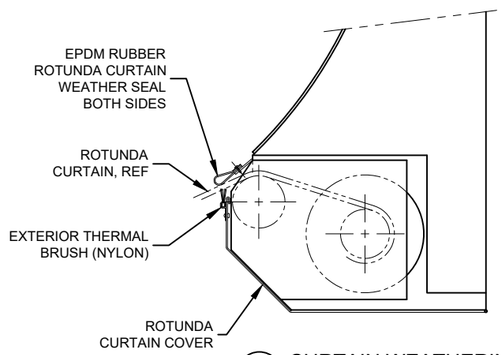

3 SD-2 CURTAIN WEATHERING
SCALE 1.5:1
R.S. SHOWN,
L.S. OPPOSITE

ROTUNDA ELEVATION & INTERIOR

FOR REFERENCE ONLY

UNLESS OTHERWISE SPECIFIED
ANG ±1° FRACTIONAL ±1/16
2 PL ±.06 3 PL ±.030
HOLES & SLOTS ±.015
MM 0 PL ±1.5 1 PL ±.75
INTERPRET DIM AND TOL PER
ASME Y14.5-2009

THIRD ANGLE PROJECTION

DRFTR	EDW	DATE	02-02-2021
CHKD	-	DATE	-
APVD	-	DATE	-

THIS DOCUMENT CONTAINS INFORMATION THAT IS PROPRIETARY AND CONFIDENTIAL TO JOHN BEAN TECHNOLOGIES CORPORATION AND ITS AFFILIATES, AND MAY NOT BE PUBLICLY DISCLOSED WITHOUT THE EXPRESS WRITTEN PERMISSION OF JOHN BEAN TECHNOLOGIES CORPORATION. UNDER ANY U.S. GOVERNMENT PRIME CONTRACT THIS INFORMATION SHALL BE CONSIDERED TO BE "LIMITED RIGHTS DATA".
© 2021 JBT

Jetway®Systems
Ogden, UT, U.S.A.

TITLE
SUBMITTAL: APRON DRIVE
ERIE INT'L AIRPORT

SIZE	CAGE CODE	DWG NO.	PROJECT	REV
D	54077	SD-2	FAZ-ERI_M	A

SCALE: NONE
WEIGHT: LB: - KG: -

AUTOCAD

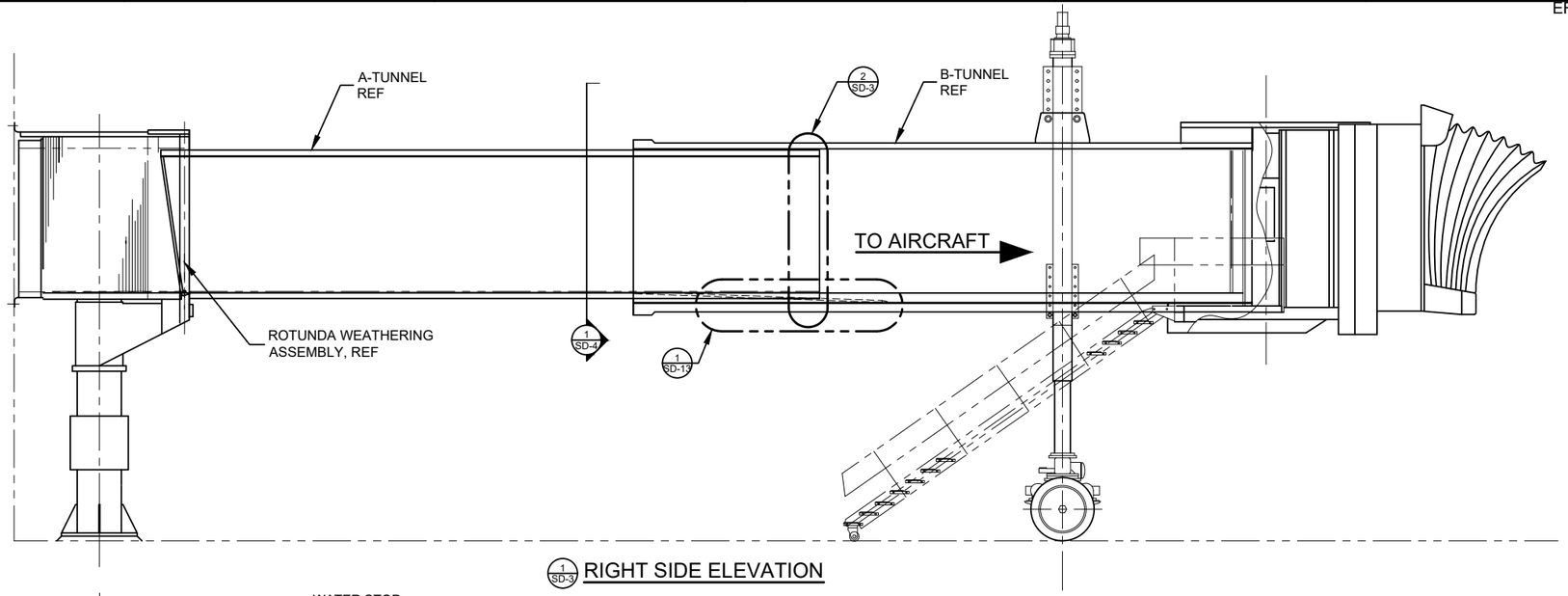

1 SD-3 RIGHT SIDE ELEVATION

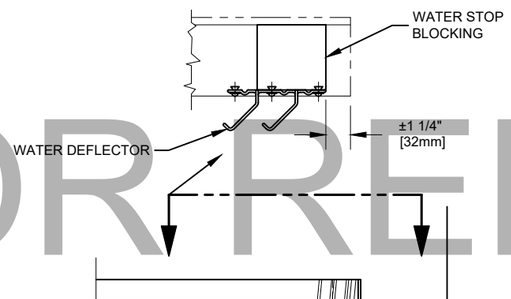

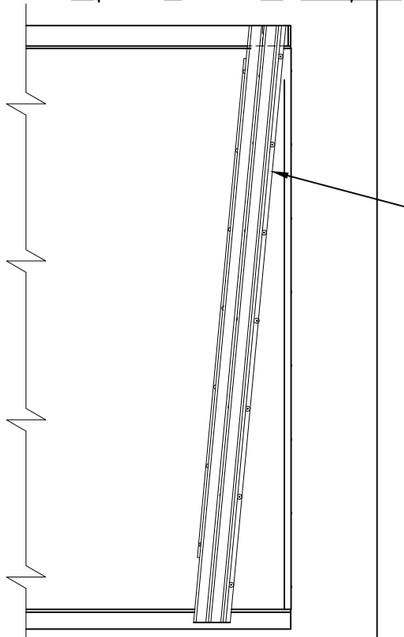

WATER DEFLECTOR

3 SD-3

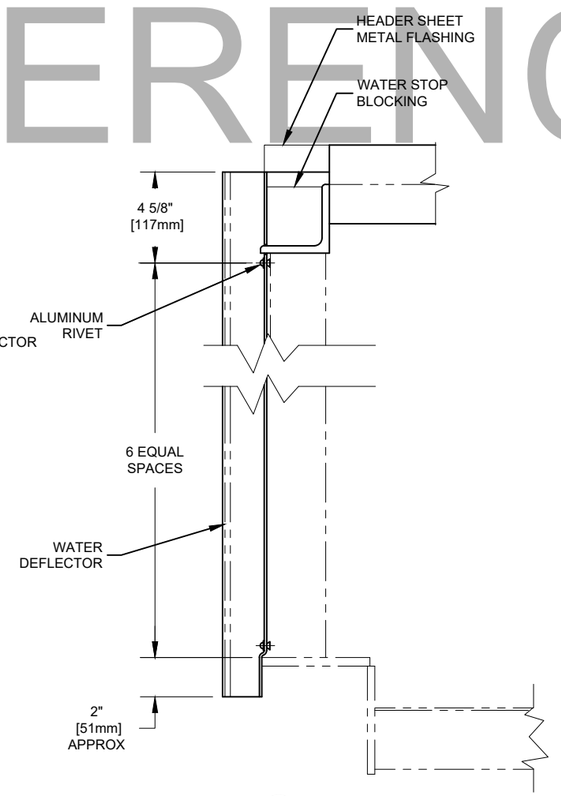

3 SD-3 SECTION

FOR REFERENCE ONLY

TUNNEL WEATHERING

UNLESS OTHERWISE SPECIFIED
ANG ±1° FRACTIONAL ±1/16
2 PL ±.06 3 PL ±.030
HOLES & SLOTS ±.015
MM 0 PL ±1.5 1 PL ±.75
INTERPRET DIM AND TOL PER
ASME Y14.5-2009

THIRD ANGLE PROJECTION

DRFTR	EDW	DATE	02-02-2021
CHKD	-	DATE	-
APVD	-	DATE	-

THIS DOCUMENT CONTAINS INFORMATION THAT IS PROPRIETARY AND CONFIDENTIAL TO JOHN BEAN TECHNOLOGIES CORPORATION AND ITS AFFILIATES, AND MAY NOT BE PUBLICLY DISCLOSED WITHOUT THE EXPRESS WRITTEN PERMISSION OF JOHN BEAN TECHNOLOGIES CORPORATION. UNDER ANY U.S. GOVERNMENT PRIME CONTRACT THIS INFORMATION SHALL BE CONSIDERED TO BE "LIMITED RIGHTS DATA".

© 2021 JBT

Jetway®Systems
Ogden, UT, U.S.A.

TITLE
SUBMITTAL: APRON DRIVE
ERIE INT'L AIRPORT

SIZE	CAGE CODE	DWG NO.	PROJECT	REV
D	54077	SD-3	FAZ-ERI_M	A

SCALE: NONE
WEIGHT: LB: - KG: -

AUTOCAD

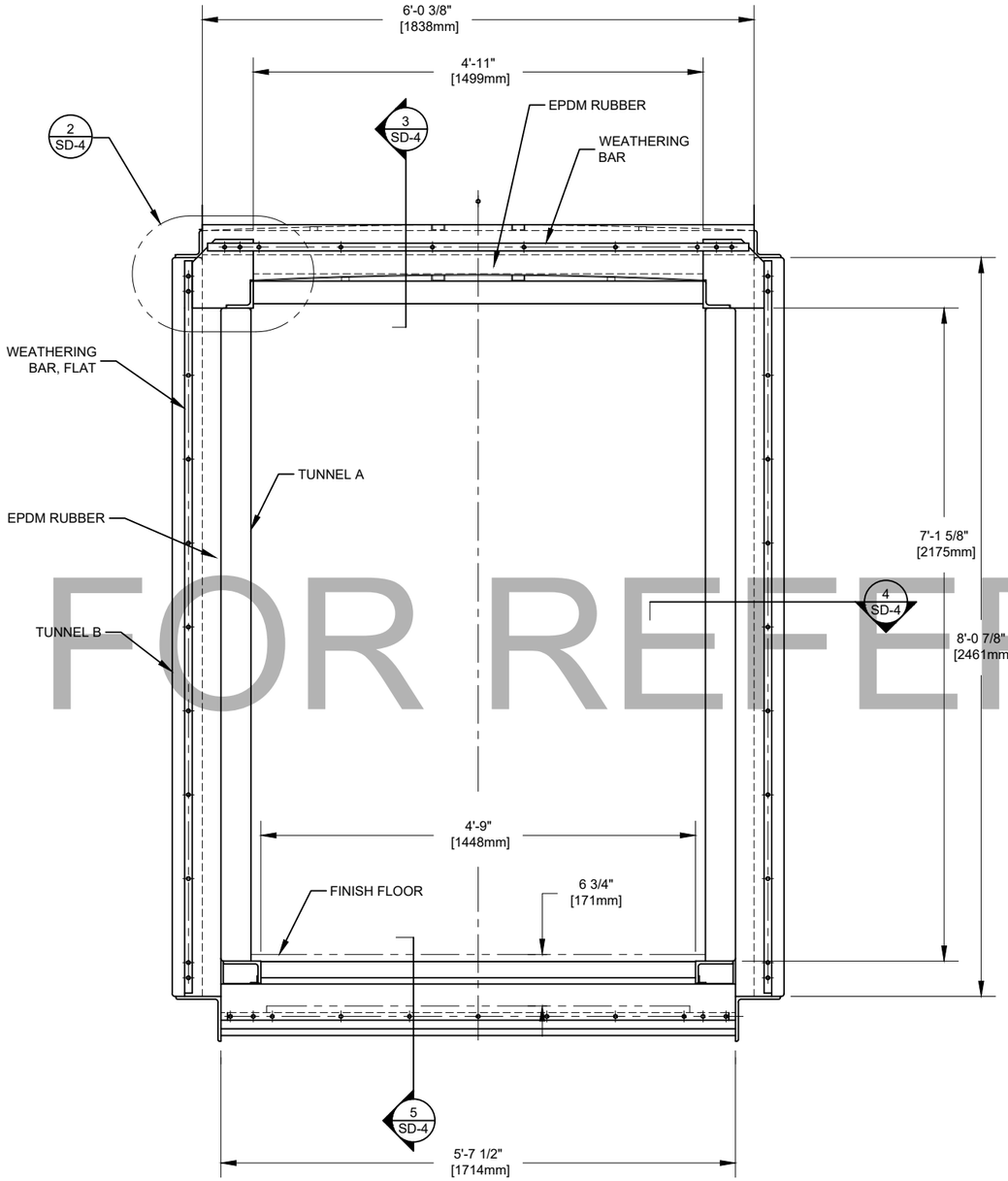

1 SD-4 TUNNEL WEATHERING

TUNNEL WEATHERING A-B SHOWN
TUNNEL WEATHERING B-C SIMILAR

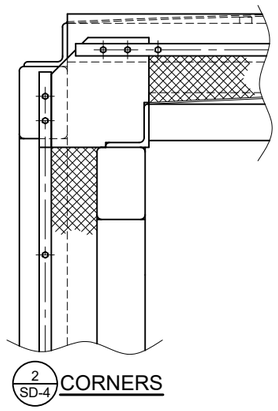

2 SD-4 CORNERS

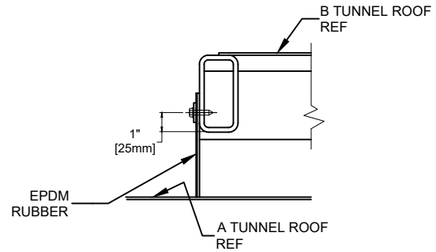

3 SD-4 ROOF

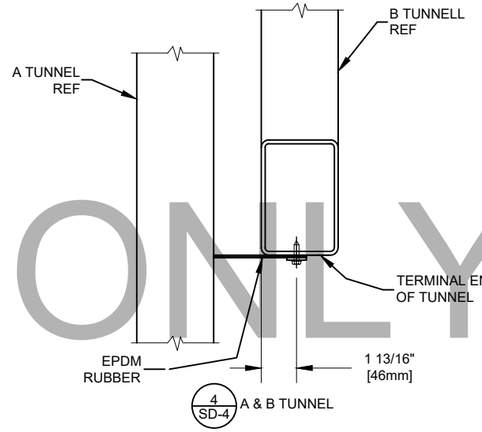

4 SD-4 A & B TUNNEL

CLADDED WALLS

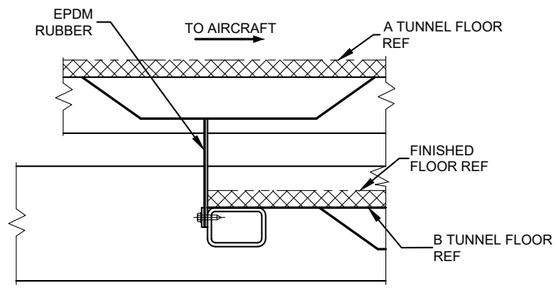

5 SD-4 FLOORS

FOR REFERENCE ONLY

TUNNEL WEATHERING DETAILS

UNLESS OTHERWISE SPECIFIED
ANG ±1° FRACTIONAL ±1/16
2 PL ±.06 3 PL ±.030
HOLES & SLOTS ±.015
MM 0 PL ±1.5 1 PL ±.75
INTERPRET DIM AND TOL PER ASME Y14.5-2009
THIRD ANGLE PROJECTION

DRFTR	EDW	DATE	02-02-2021
CHKD	-	DATE	-
APVD	-	DATE	-

THIS DOCUMENT CONTAINS INFORMATION THAT IS PROPRIETARY AND CONFIDENTIAL TO JOHN BEAN TECHNOLOGIES CORPORATION AND ITS AFFILIATES, AND MAY NOT BE PUBLICLY DISCLOSED WITHOUT THE EXPRESS WRITTEN PERMISSION OF JOHN BEAN TECHNOLOGIES CORPORATION. UNDER ANY U.S. GOVERNMENT PRIME CONTRACT THIS INFORMATION SHALL BE CONSIDERED TO BE "LIMITED RIGHTS DATA".
© 2021 JBT

Jetway®Systems
Ogden, UT, U.S.A.

TITLE
SUBMITTAL: APRON DRIVE
ERIE INT'L AIRPORT

SIZE	CAGE CODE	DWG NO.	PROJECT	REV
D	54077	SD-4	FAZ-ERI_M	A

SCALE: NONE
WEIGHT: LB: - KG: -
AUTOCAD

FOR REFERENCE ONLY

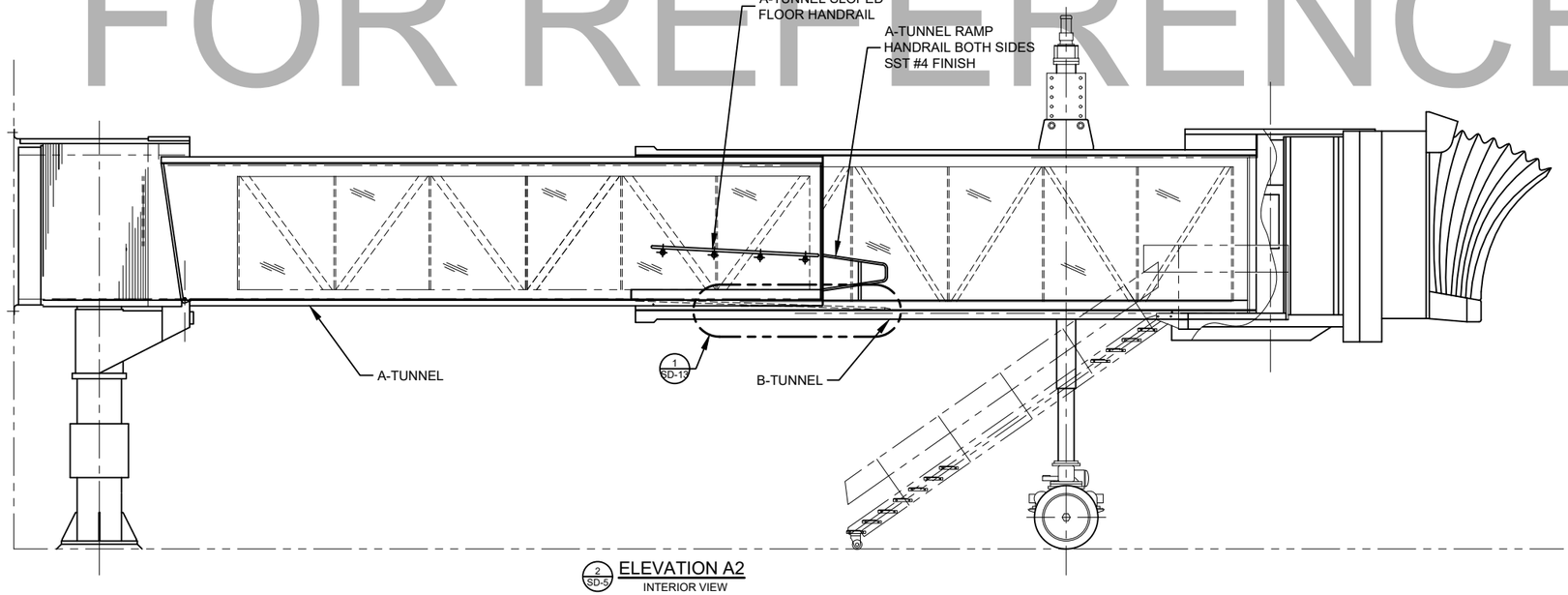

2 SD-5 ELEVATION A2
INTERIOR VIEW

INTERIOR FINISH - ELEVATION

UNLESS OTHERWISE SPECIFIED
ANG ±1° FRACTIONAL ±1/16
2 PL ±.06 3 PL ±.030
HOLES & SLOTS ±.015
MM 0 PL ±1.5 1 PL ±.75
INTERPRET DIM AND TOL PER
ASME Y14.5-2009

THIRD ANGLE PROJECTION

DRFTR	EDW	DATE	02-02-2021
CHKD	-	DATE	-
APVD	-	DATE	-

THIS DOCUMENT CONTAINS INFORMATION THAT IS PROPRIETARY AND CONFIDENTIAL TO JOHN BEAN TECHNOLOGIES CORPORATION AND ITS AFFILIATES, AND MAY NOT BE PUBLICLY DISCLOSED WITHOUT THE EXPRESS WRITTEN PERMISSION OF JOHN BEAN TECHNOLOGIES CORPORATION. UNDER ANY U.S. GOVERNMENT PRIME CONTRACT THIS INFORMATION SHALL BE CONSIDERED TO BE "LIMITED RIGHTS DATA".
© 2021 JBT

Jetway®Systems
Ogden, UT, U.S.A.

TITLE
SUBMITTAL: APRON DRIVE
ERIE INT'L AIRPORT

SIZE	CAGE CODE	DWG NO.	PROJECT	REV
D	54077	SD-5	FAZ-ERI_M	A

SCALE: NONE
WEIGHT: LB: - KG: -
AUTOCAD

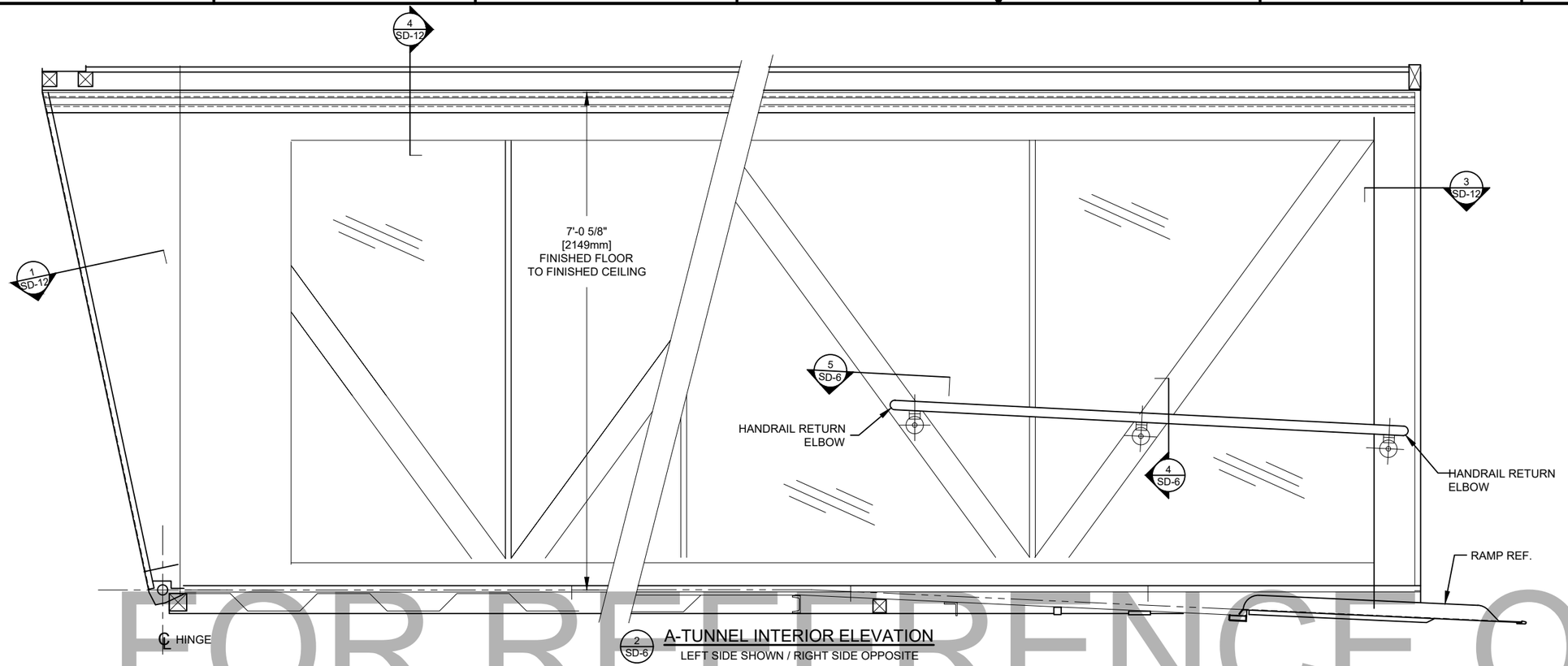

2 SD-6 **A-TUNNEL INTERIOR ELEVATION**
LEFT SIDE SHOWN / RIGHT SIDE OPPOSITE

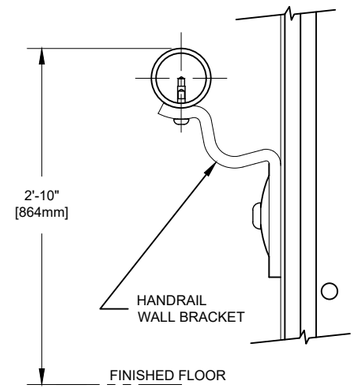

4 SD-6 **HANDRAIL**
RIGHT & LEFT SIDES
'A' TUNNEL ONLY

FOR REFERENCE ONLY

TO AIRCRAFT

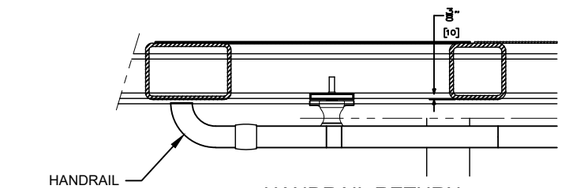

5 SD-6 **HANDRAIL RETURN**
SCALE 2:1
TYPICAL AT EACH END
AND BOTH SIDES

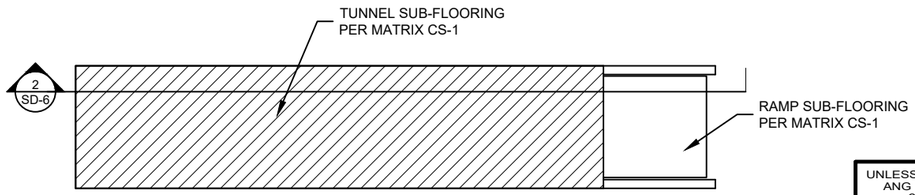

TO AIRCRAFT

1 SD-6 **KEY PLAN**
A TUNNEL

INTERIOR FINISH DETAILS - A TUNNEL

UNLESS OTHERWISE SPECIFIED
ANG ±1° FRACTIONAL ±1/16
2 PL ±.06 3 PL ±.030
HOLES & SLOTS ±.015
MM 0 PL ±1.5 1 PL ±.75
INTERPRET DIM AND TOL PER
ASME Y14.5-2009
THIRD ANGLE PROJECTION

DRFTR	EDW	DATE	02-02-2021
CHKD	-	DATE	-
APVD	-	DATE	-

THIS DOCUMENT CONTAINS INFORMATION THAT IS PROPRIETARY AND CONFIDENTIAL TO JOHN BEAN TECHNOLOGIES CORPORATION AND ITS AFFILIATES, AND MAY NOT BE PUBLICLY DISCLOSED WITHOUT THE EXPRESS WRITTEN PERMISSION OF JOHN BEAN TECHNOLOGIES CORPORATION. UNDER ANY U.S. GOVERNMENT PRIME CONTRACT THIS INFORMATION SHALL BE CONSIDERED TO BE "LIMITED RIGHTS DATA".
© 2021 JBT

Jetway®Systems
Ogden, UT, U.S.A.

TITLE
SUBMITTAL: APRON DRIVE
ERIE INT'L AIRPORT

SIZE	CAGE CODE	DWG NO.	PROJECT	REV
D	54077	SD-6	FAZ-ERI_M	A

SCALE: NONE WEIGHT: LB: - KG: -

AUTOCAD

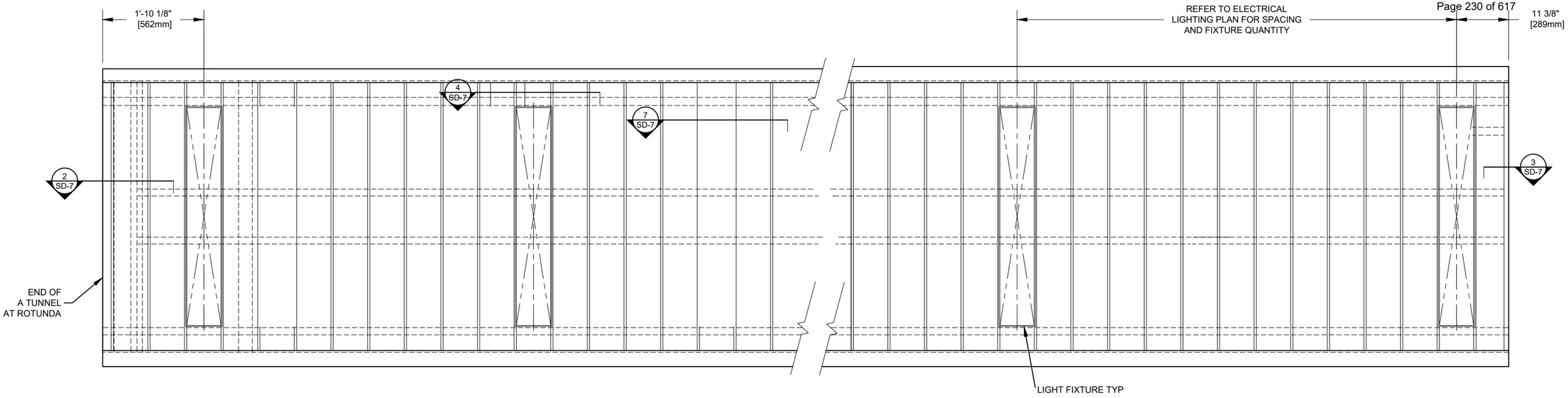

1/SD-7 TUNNEL A CEILING WITH 8" X 4'0 LIGHTING PLAN (LOOKING UP)

FOR REFERENCE ONLY

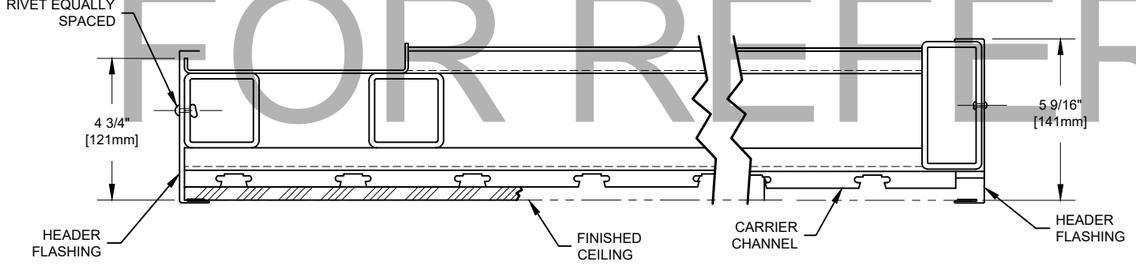

2/SD-7 AFT CEILING
A TUNNEL

3/SD-7 FORWARD CEILING
A TUNNEL
B TUNNEL

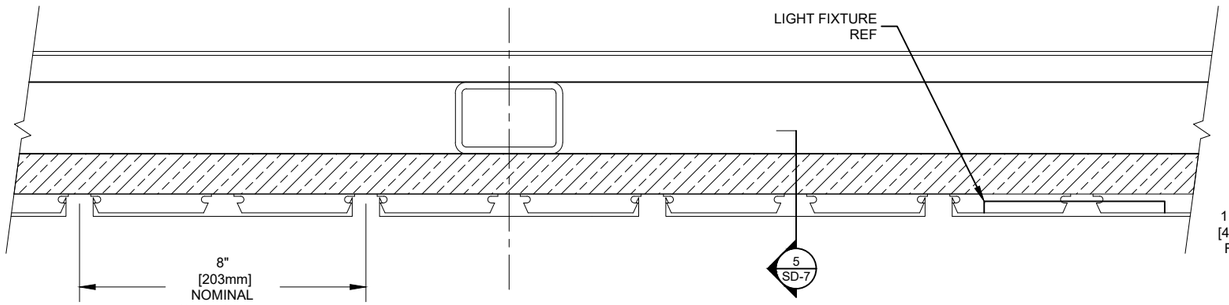

4/SD-7 CEILING / LIGHT FIXTURE
SCALE 5:1

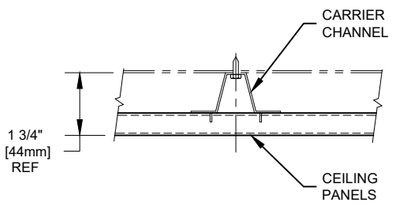

5/SD-7 CEILING ATTACHMENT

INTERIOR FINISH DETAILS - A TUNNEL

UNLESS OTHERWISE SPECIFIED
ANG ±1° FRACTIONAL ±1/16
2 PL ±.06 3 PL ±.030
HOLES & SLOTS ±.015
MM 0 PL ±1.5 1 PL ±.75
INTERPRET DIM AND TOL PER
ASME Y14.5-2009
THIRD ANGLE PROJECTION

DRFTR: EDW DATE: 02-02-2021
CHKD: - DATE: -
APVD: - DATE: -

THIS DOCUMENT CONTAINS INFORMATION THAT IS PROPRIETARY AND CONFIDENTIAL TO JOHN BEAN TECHNOLOGIES CORPORATION AND ITS AFFILIATES, AND MAY NOT BE PUBLICLY DISCLOSED WITHOUT THE EXPRESS WRITTEN PERMISSION OF JOHN BEAN TECHNOLOGIES CORPORATION. UNDER ANY U.S. GOVERNMENT PRIME CONTRACT THIS INFORMATION SHALL BE CONSIDERED TO BE "LIMITED RIGHTS DATA".
© 2021 JBT

Jetway®Systems
Ogden, UT, U.S.A.

TITLE
SUBMITTAL: APRON DRIVE
ERIE INT'L AIRPORT

SIZE	CAGE CODE	DWG NO.	PROJECT	REV
D	54077	SD-7	FAZ-ERI_M	A

SCALE: NONE WEIGHT: LB: - KG: -

AUTOCAD

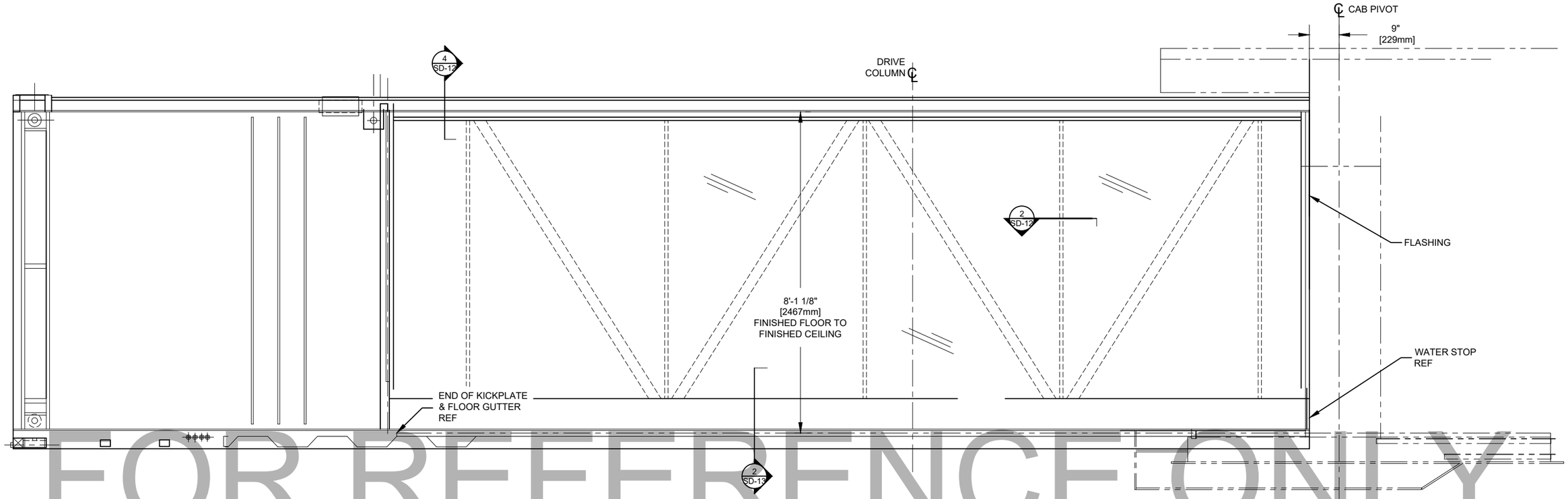

2 SD-10 C-TUNNEL INTERIOR ELEVATION
LEFT SIDE SHOWN RIGHT SIDE OPPOSITE & NOTED

FOR REFERENCE ONLY

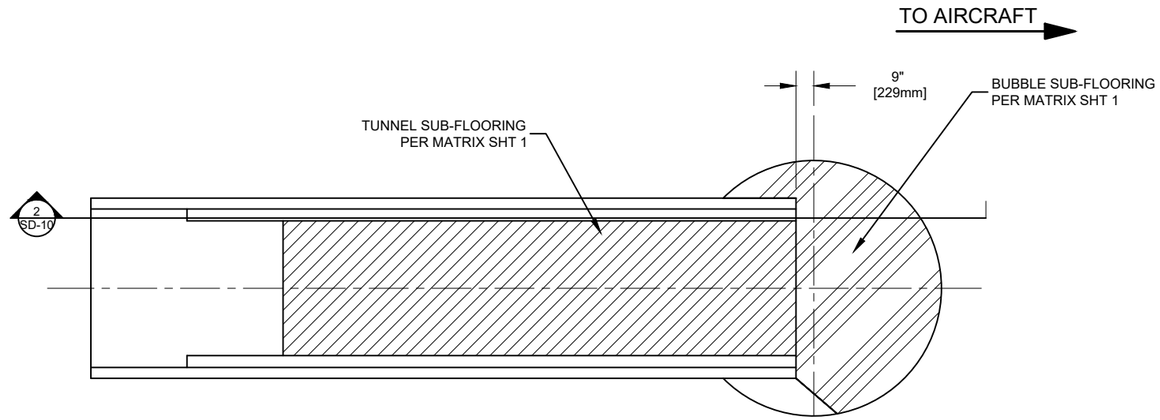

1 SD-10 KEY PLAN
C TUNNEL

TO AIRCRAFT

INTERIOR FINISH DETAILS
A2 B-TUNNEL

UNLESS OTHERWISE SPECIFIED
ANG ±1° FRACTIONAL ±1/16
2 PL ±.06 3 PL ±.030
HOLES & SLOTS ±.015
MM 0 PL ±1.5 1 PL ±.75
INTERPRET DIM AND TOL PER
ASME Y14.5-2009
THIRD ANGLE PROJECTION

DR/TR	EDW	DATE	02-02-2021
CHKD	-	DATE	-
APVD	-	DATE	-

THIS DOCUMENT CONTAINS INFORMATION THAT IS PROPRIETARY AND CONFIDENTIAL TO JOHN BEAN TECHNOLOGIES CORPORATION AND ITS AFFILIATES, AND MAY NOT BE PUBLICLY DISCLOSED WITHOUT THE EXPRESS WRITTEN PERMISSION OF JOHN BEAN TECHNOLOGIES CORPORATION. UNDER ANY U.S. GOVERNMENT PRIME CONTRACT THIS INFORMATION SHALL BE CONSIDERED TO BE "LIMITED RIGHTS DATA".
© 2021 JBT

Jetway®Systems
Ogden, UT, U.S.A.

TITLE
SUBMITTAL: APRON DRIVE
ERIE INT'L AIRPORT

SIZE	CAGE CODE	DWG NO.	PROJECT	REV
D	54077	SD-10	FAZ-ERI_M	A
SCALE: NONE	WEIGHT: LB: - KG: -			

AUTOCAD

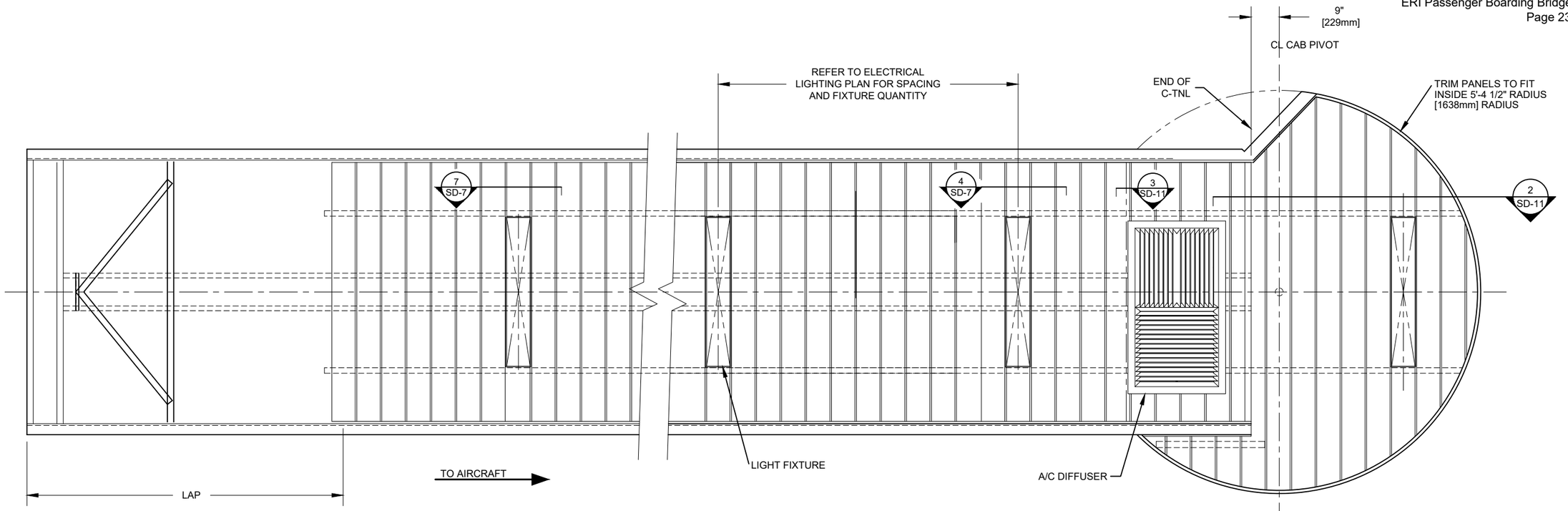

TUNNEL C CEILING WITH 8" X 4' LIGHTING PLAN (LOOKING UP)

FOR REFERENCE ONLY

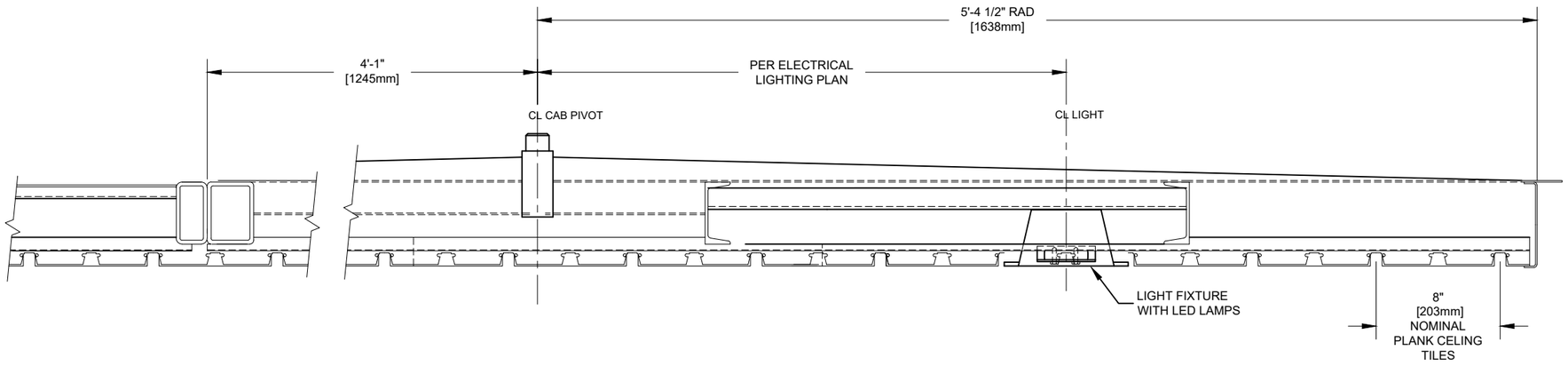

3 SD-11 TUNNEL C CEILING
A/C COMPONENTS NOT SHOWN

2 SD-11 BUBBLE CEILING
SCALE 4:1
BUBBLE CEILING ONLY

INTERIOR FINISH DETAILS
A2 B-TUNNEL

UNLESS OTHERWISE SPECIFIED
ANG ±1° FRACTIONAL ±1/16
2 PL ±.06 3 PL ±.030
HOLES & SLOTS ±.015
MM 0 PL ±1.5 1 PL ±.75
INTERPRET DIM AND TOL PER
ASME Y14.5-2009
THIRD ANGLE PROJECTION

DRFTR	EDW	DATE	02-02-2021
CHKD	-	DATE	-
APVD	-	DATE	-

THIS DOCUMENT CONTAINS INFORMATION THAT IS PROPRIETARY AND CONFIDENTIAL TO JOHN BEAN TECHNOLOGIES CORPORATION AND ITS AFFILIATES, AND MAY NOT BE PUBLICLY DISCLOSED WITHOUT THE EXPRESS WRITTEN PERMISSION OF JOHN BEAN TECHNOLOGIES CORPORATION. UNDER ANY U.S. GOVERNMENT PRIME CONTRACT THIS INFORMATION SHALL BE CONSIDERED TO BE "LIMITED RIGHTS DATA".
© 2021 JBT

Jetway®Systems
Ogden, UT, U.S.A.

TITLE
SUBMITTAL: APRON DRIVE
ERIE INT'L AIRPORT

SIZE	CAGE CODE	DWG NO.	PROJECT	REV
D	54077	SD-11	FAZ-ERI_M	A

SCALE: NONE
WEIGHT: LB: - KG: -
AUTOCAD

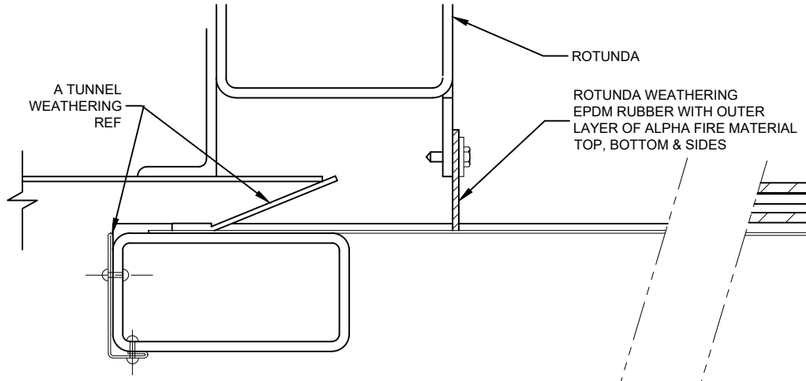

1 SD-12 A TUNNEL

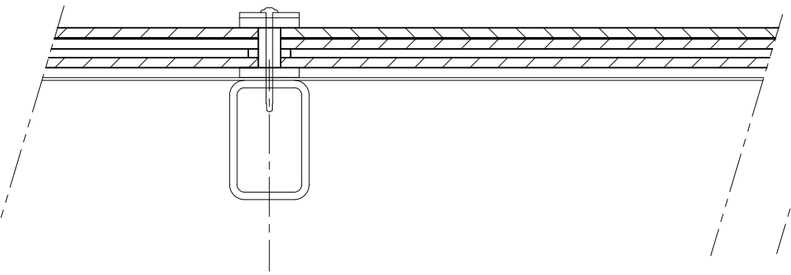

2 SD-12 ALL TUNNELS

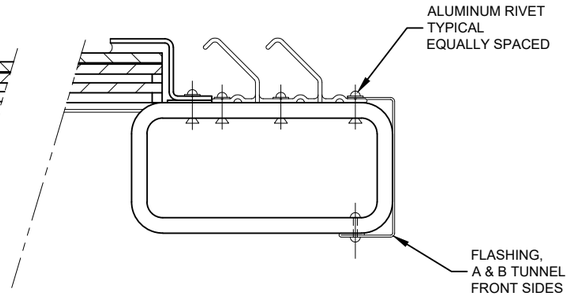

3 SD-12 A TUNNEL

FOR REFERENCE ONLY

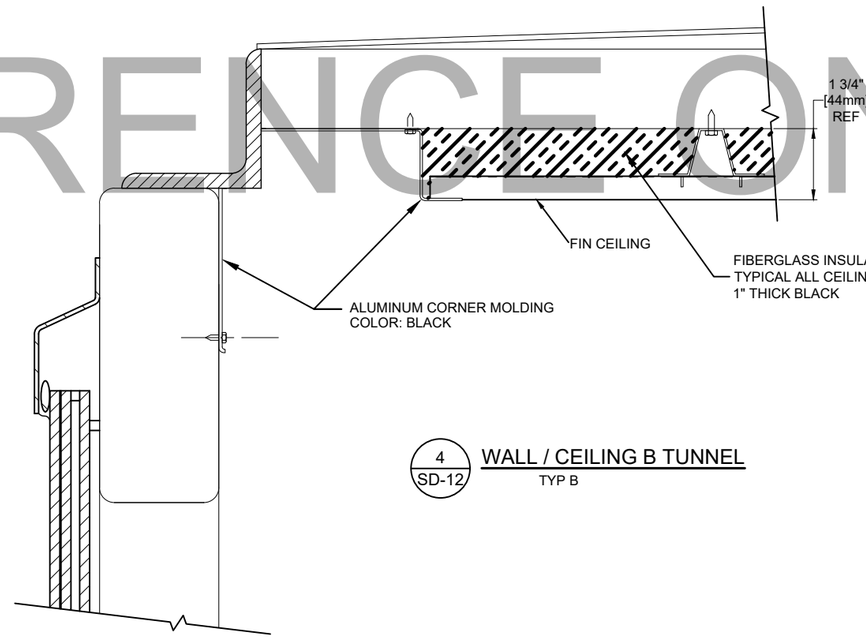

4 SD-12 WALL / CEILING B TUNNEL
TYP B

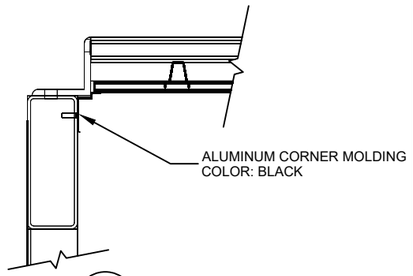

4 SD-12 WALL/CEILING A TUNNEL

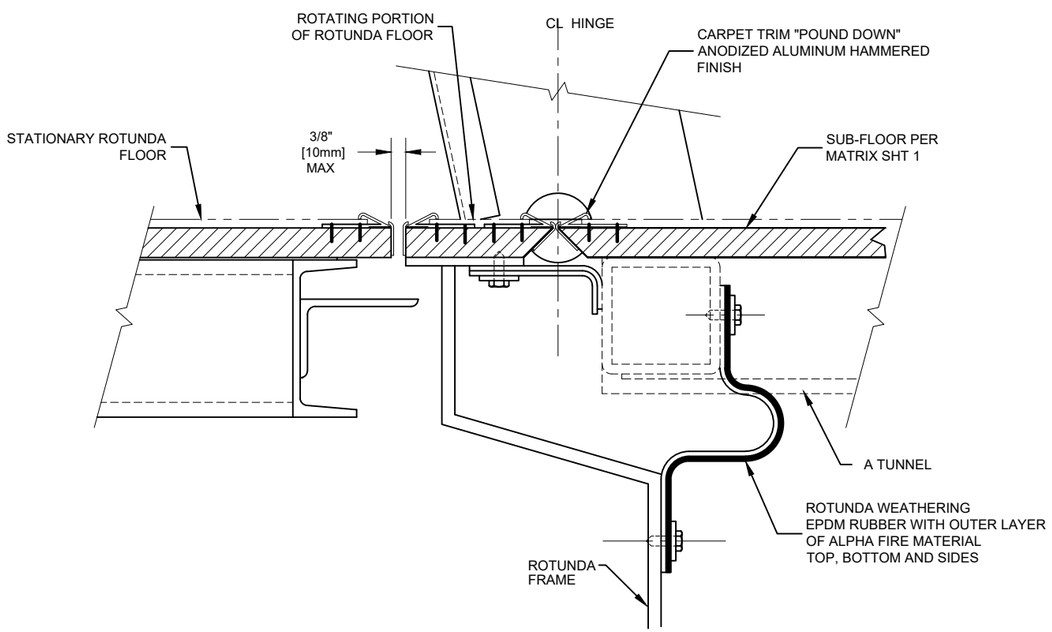

5 SD-12 ROTUNDA / A TUNNEL

INTERIOR FINISH COMMON DETAILS

UNLESS OTHERWISE SPECIFIED
ANG ±1° FRACTIONAL ±1/16
2 PL ±.06 3 PL ±.030
HOLES & SLOTS ±.015
MM 0 PL ±1.5 1 PL ±.75
INTERPRET DIM AND TOL PER ASME Y14.5-2009
THIRD ANGLE PROJECTION

DRFTR: EDW DATE: 02-02-2021
CHKD: - DATE: -
APVD: - DATE: -

THIS DOCUMENT CONTAINS INFORMATION THAT IS PROPRIETARY AND CONFIDENTIAL TO JOHN BEAN TECHNOLOGIES CORPORATION AND ITS AFFILIATES, AND MAY NOT BE PUBLICLY DISCLOSED WITHOUT THE EXPRESS WRITTEN PERMISSION OF JOHN BEAN TECHNOLOGIES CORPORATION. UNDER ANY U.S. GOVERNMENT PRIME CONTRACT THIS INFORMATION SHALL BE CONSIDERED TO BE "LIMITED RIGHTS DATA".
© 2021 JBT

Jetway®Systems
Ogden, UT, U.S.A.

TITLE: SUBMITTAL: APRON DRIVE
ERIE INT'L AIRPORT

SIZE	CAGE CODE	DWG NO.	PROJECT	REV
D	54077	SD-12	FAZ-ERI_M	A

SCALE: NONE WEIGHT: LB: - KG: -

AUTOCAD

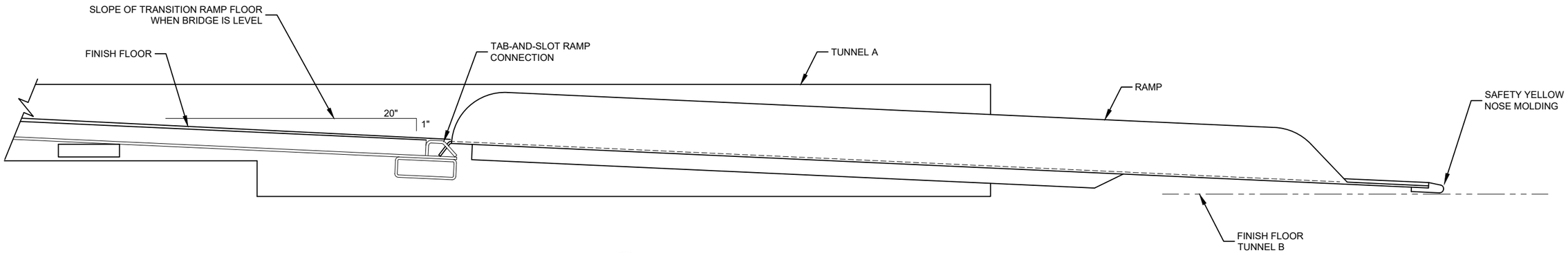

1 / SD-13 TRANSITION RAMPS

A TUNNEL SHOWN
B TUNNEL SIMILAR

FOR REFERENCE ONLY

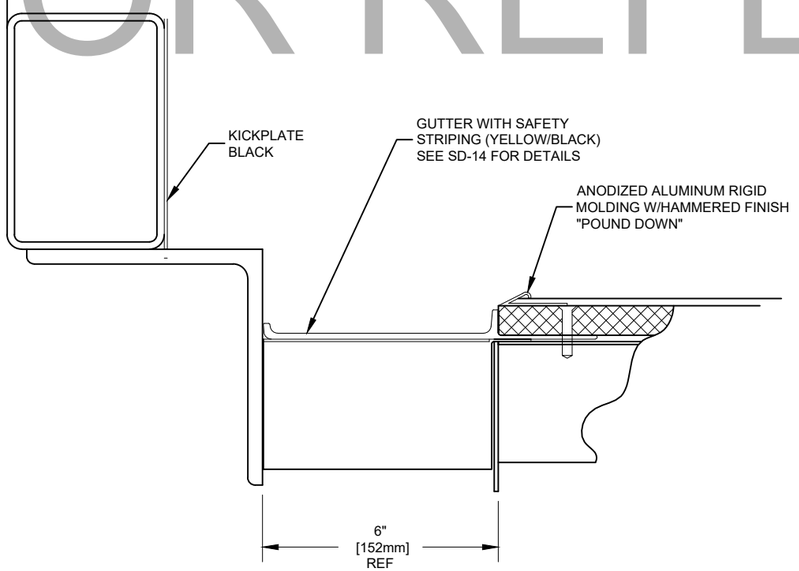

2 / SD-13 FLOOR / WALL

LEFT SIDE SHOWN
RIGHT SIDE OPPOSITE
B & C TUNNEL NOTED

INTERIOR FINISH COMMON DETAILS

UNLESS OTHERWISE SPECIFIED
ANG ±1° FRACTIONAL ±1/16
2 PL ±.06 3 PL ±.030
HOLES & SLOTS ±.015
MM 0 PL ±1.5 1 PL ±.75
INTERPRET DIM AND TOL PER
ASME Y14.5-2009

THIRD ANGLE PROJECTION

DRFTR	EDW	DATE 02-02-2021
CHKD	-	DATE -
APVD	-	DATE -

THIS DOCUMENT CONTAINS INFORMATION THAT IS PROPRIETARY AND CONFIDENTIAL TO JOHN BEAN TECHNOLOGIES CORPORATION AND ITS AFFILIATES, AND MAY NOT BE PUBLICLY DISCLOSED WITHOUT THE EXPRESS WRITTEN PERMISSION OF JOHN BEAN TECHNOLOGIES CORPORATION. UNDER ANY U.S. GOVERNMENT PRIME CONTRACT THIS INFORMATION SHALL BE CONSIDERED TO BE "LIMITED RIGHTS DATA".

© 2021 JBT

Jetway®Systems
Ogden, UT, U.S.A.

TITLE
SUBMITTAL: APRON DRIVE
ERIE INT'L AIRPORT

SIZE	CAGE CODE	DWG NO.	PROJECT	REV
D	54077	SD-13	FAZ-ERI_M	A

SCALE: NONE WEIGHT: LB: - KG: -

AUTOCAD

FOR REFERENCE ONLY

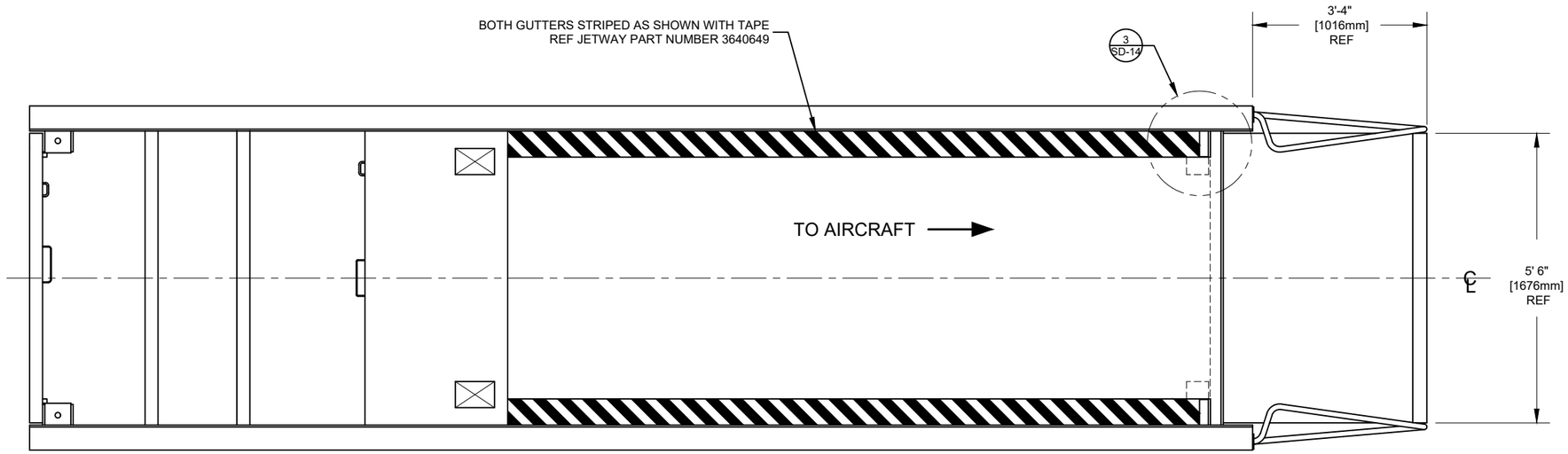

1 SD-14 PLAN VIEW TUNNEL B

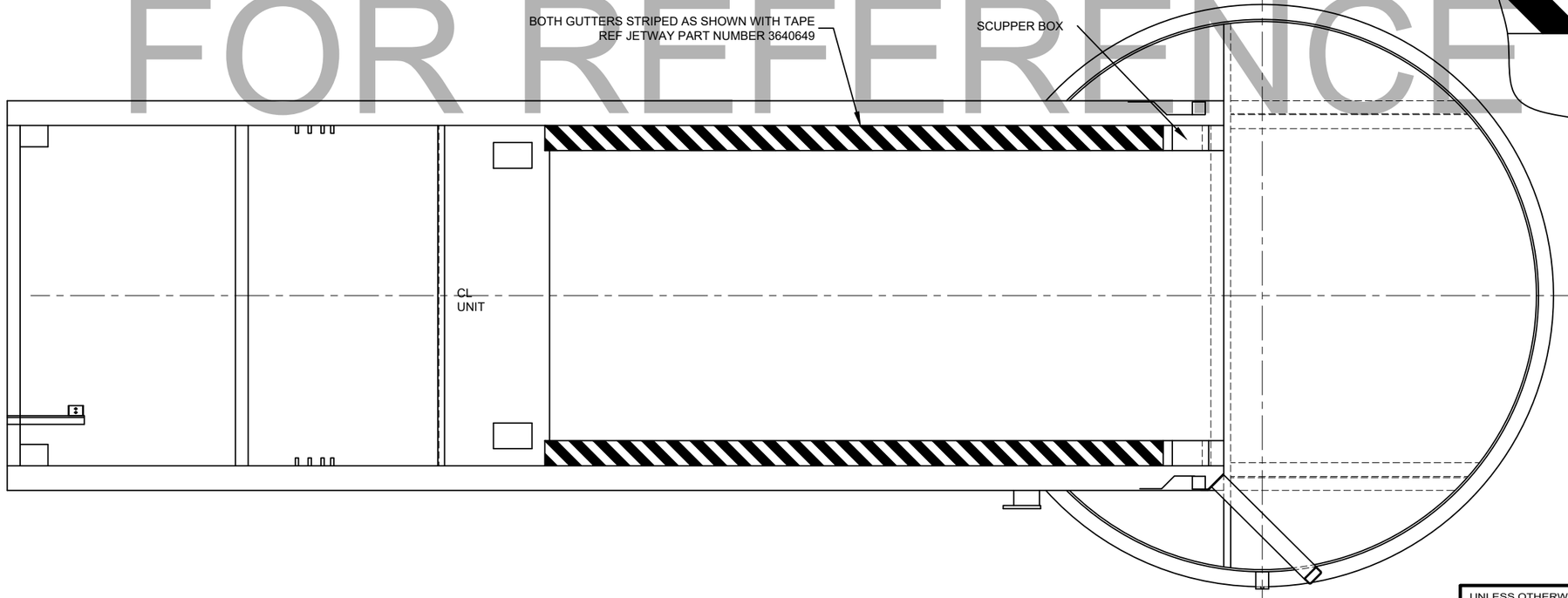

2 SD-14 PLAN VIEW TUNNEL C

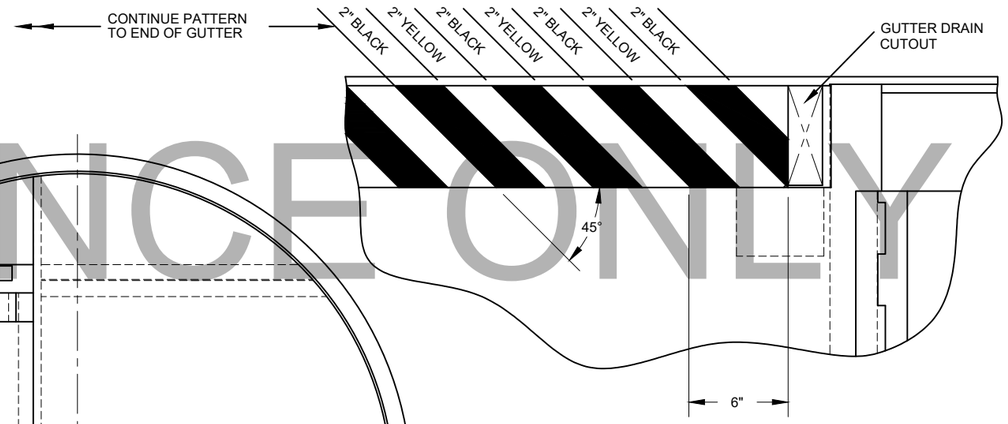

3 SD-14 STRIPING DETAIL
B TUNNEL SHOWN
C TUNNEL SIMILAR

GUTTER SAFETY STRIPING

UNLESS OTHERWISE SPECIFIED
ANG ±1° FRACTIONAL ±1/16
2 PL ±.06 3 PL ±.030
HOLES & SLOTS ±.015
MM 0 PL ±1.5 1 PL ±.75
INTERPRET DIM AND TOL PER
ASME Y14.5-2009

THIRD ANGLE PROJECTION

DRFTR	EDW	DATE	02-02-2021
CHKD	-	DATE	-
APVD	-	DATE	-

THIS DOCUMENT CONTAINS INFORMATION THAT IS PROPRIETARY AND CONFIDENTIAL TO JOHN BEAN TECHNOLOGIES CORPORATION AND ITS AFFILIATES, AND MAY NOT BE PUBLICLY DISCLOSED WITHOUT THE EXPRESS WRITTEN PERMISSION OF JOHN BEAN TECHNOLOGIES CORPORATION. UNDER ANY U.S. GOVERNMENT PRIME CONTRACT THIS INFORMATION SHALL BE CONSIDERED TO BE "LIMITED RIGHTS DATA".
© 2021 JBT

Jetway®Systems
Ogden, UT, U.S.A.

TITLE
SUBMITTAL: APRON DRIVE
ERIE INT'L AIRPORT

SIZE	CAGE CODE	DWG NO.	PROJECT	REV
D	54077	SD-14	FAZ-ERI_M	A

SCALE: NONE
WEIGHT: LB: - KG: -

AUTOCAD

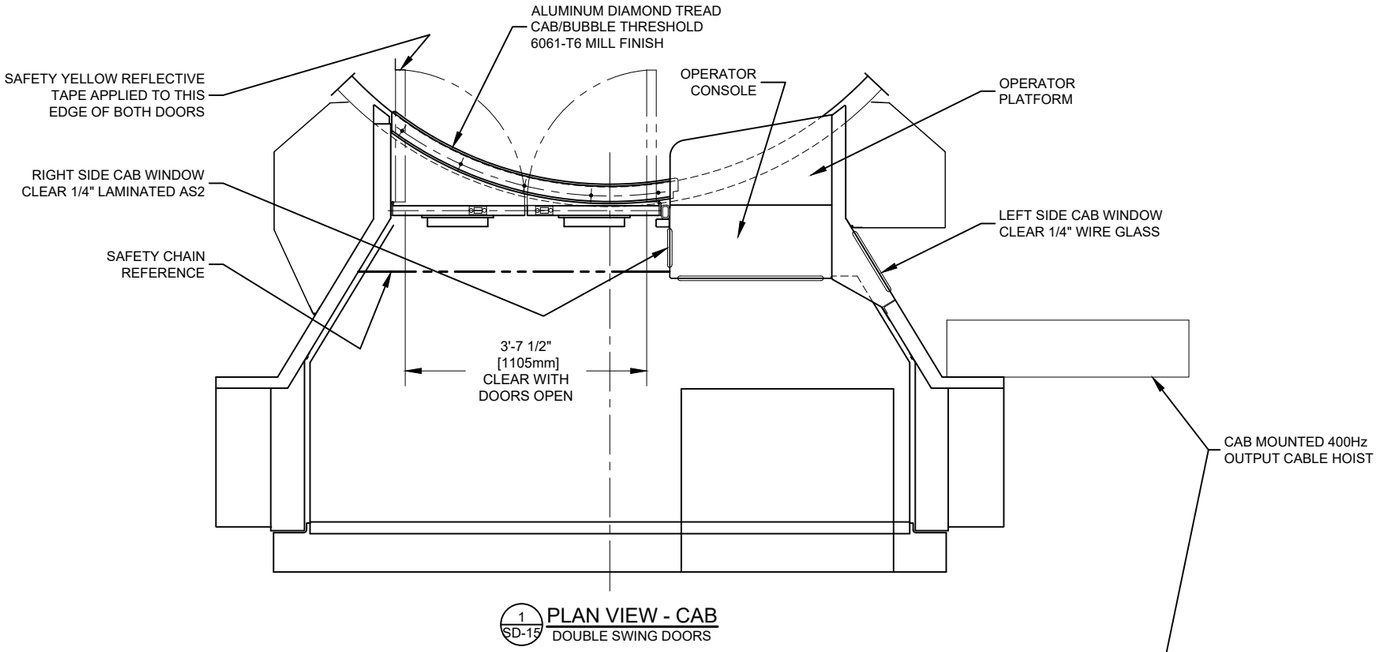

1 SD-15 PLAN VIEW - CAB
DOUBLE SWING DOORS

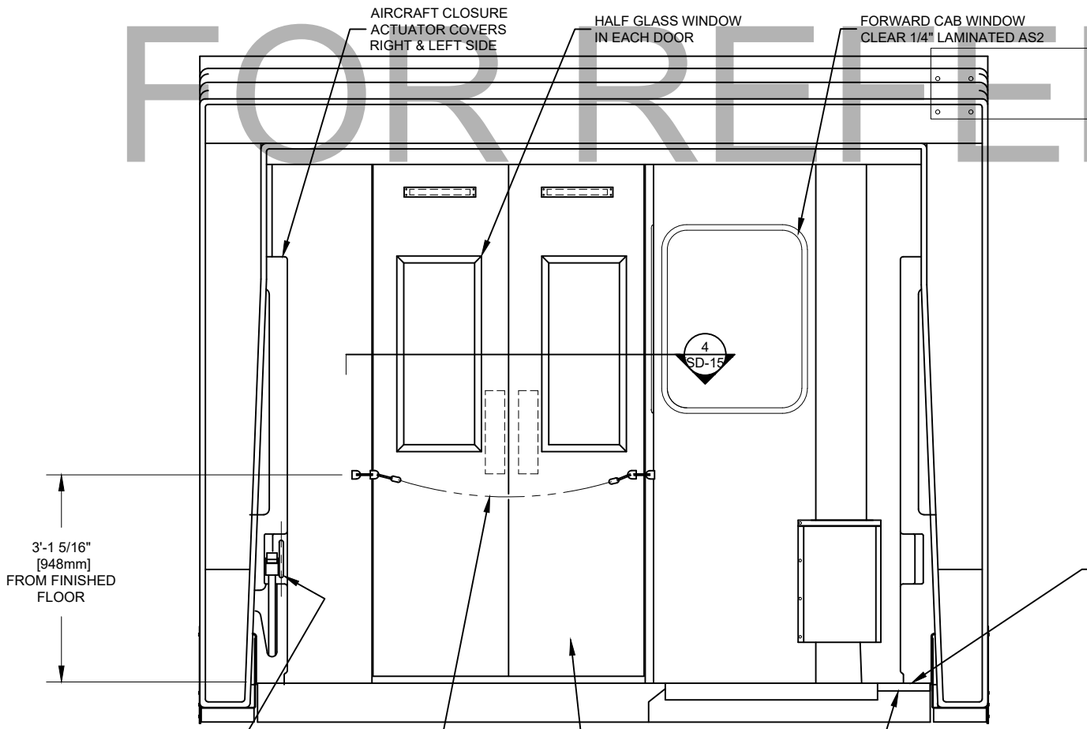

2 SD-15 FRONT ELEVATION - CAB
DOUBLE SWING DOORS

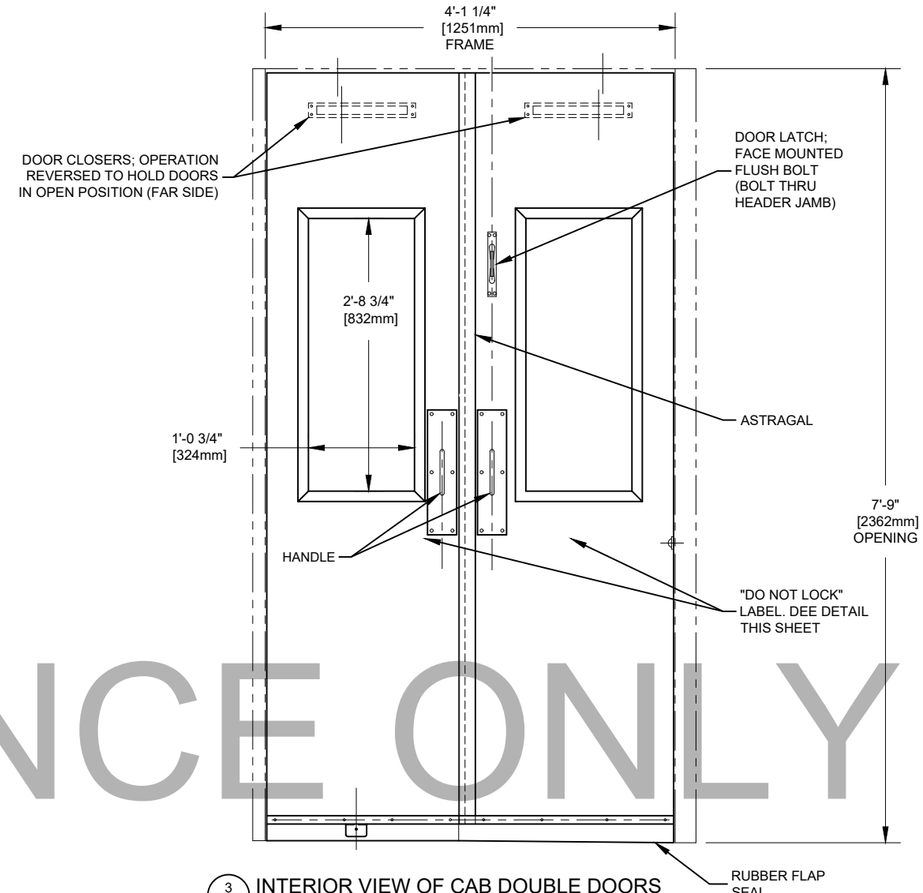

3 SD-15 INTERIOR VIEW OF CAB DOUBLE DOORS
SCALE 1.5:1

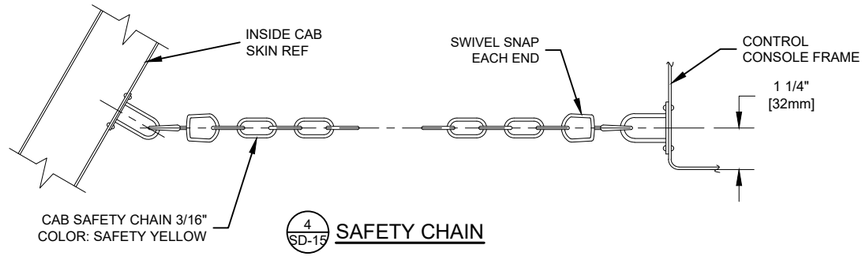

4 SD-15 SAFETY CHAIN

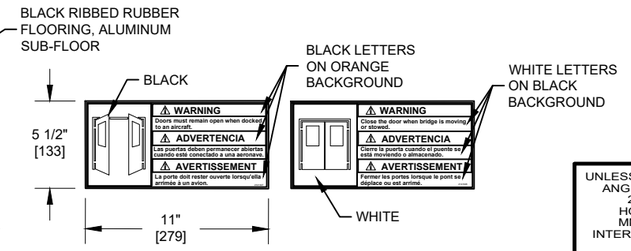

5 SD-15 "DO NOT LOCK" LABEL DETAILS

FRONT VIEW OF CAB

FOR REFERENCE ONLY

UNLESS OTHERWISE SPECIFIED
ANG ±1° FRACTIONAL ±1/16
2 PL ±.06 3 PL ±.030
HOLES & SLOTS ±.015
MM 0 PL ±1.5 1 PL ±.75
INTERPRET DIM AND TOL PER ASME Y14.5-2009
THIRD ANGLE PROJECTION

DRFR	EDW	DATE	02-02-2021
CHKD	-	DATE	-
APVD	-	DATE	-

THIS DOCUMENT CONTAINS INFORMATION THAT IS PROPRIETARY AND CONFIDENTIAL TO JOHN BEAN TECHNOLOGIES CORPORATION AND ITS AFFILIATES, AND MAY NOT BE PUBLICLY DISCLOSED WITHOUT THE EXPRESS WRITTEN PERMISSION OF JOHN BEAN TECHNOLOGIES CORPORATION. UNDER ANY U.S. GOVERNMENT PRIME CONTRACT THIS INFORMATION SHALL BE CONSIDERED TO BE "LIMITED RIGHTS DATA".
© 2021 JBT

Jetway® Systems
Ogden, UT, U.S.A.

TITLE
SUBMITTAL: APRON DRIVE
ERIE INT'L AIRPORT

SIZE	CAGE CODE	DWG NO.	PROJECT	REV
D	54077	SD-15	FAZ-ERI_M	A
SCALE: NONE	WEIGHT: LB: - KG: -			

AUTOCAD

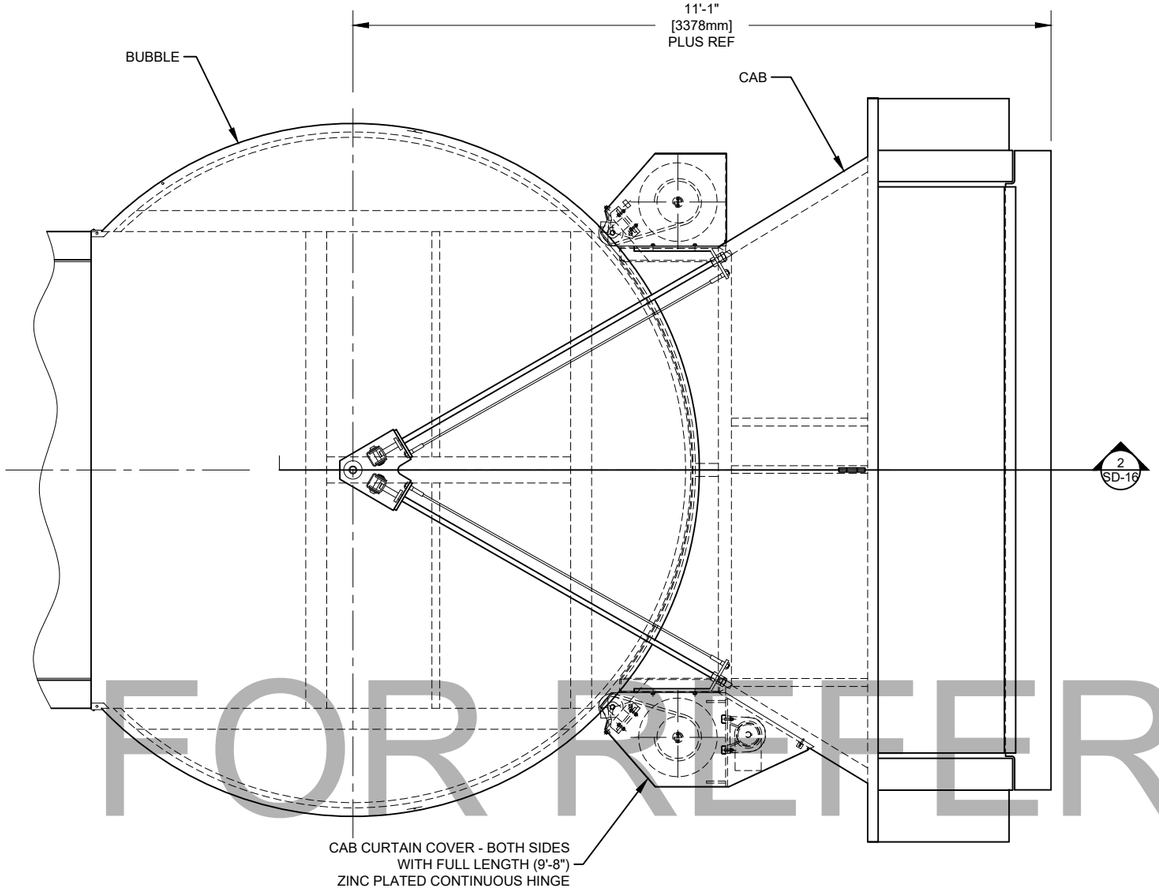

1 SD-16 BUBBLE/CAB ROOF PLAN

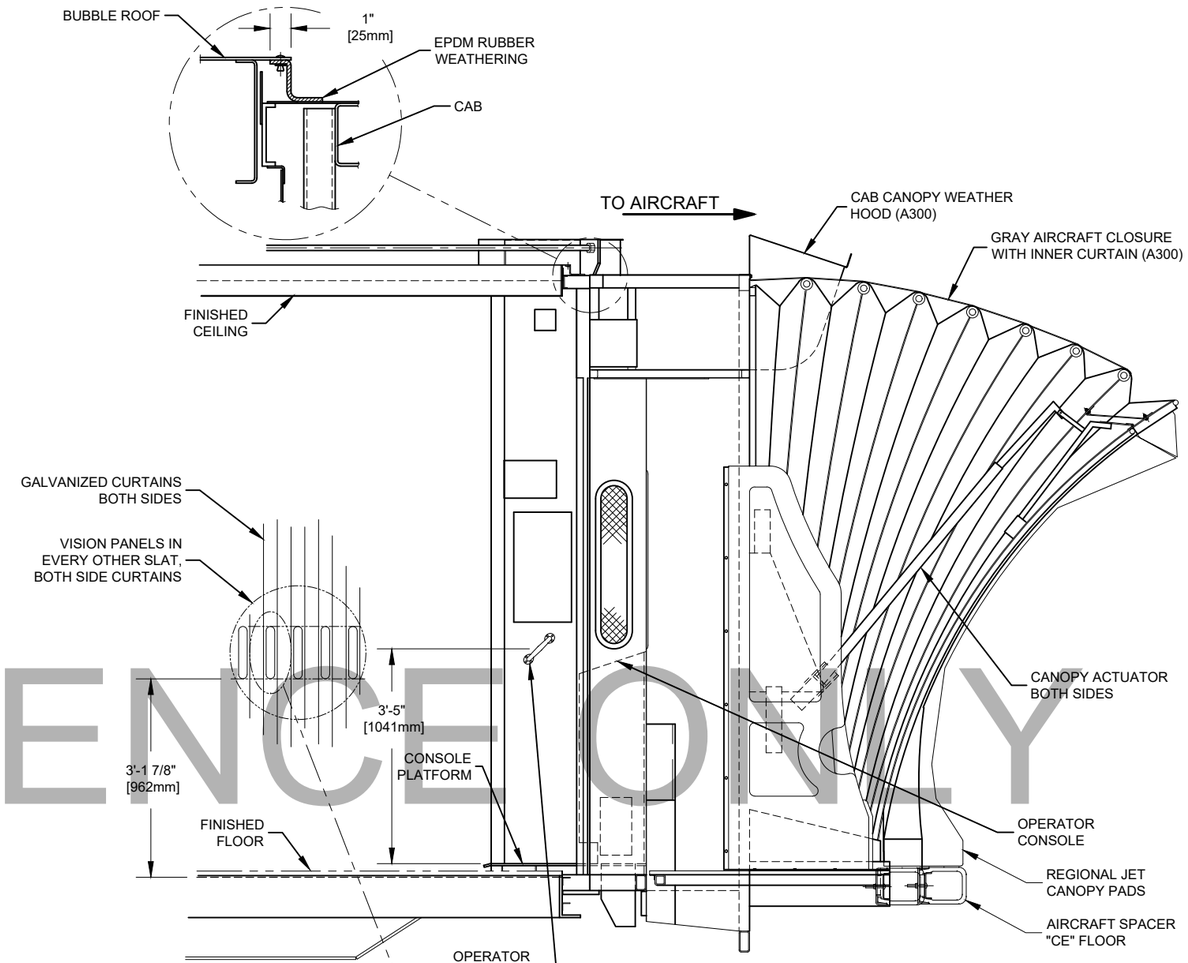

2 SD-16 AIRCRAFT CLOSURE
LEFT SIDE INTERIOR SHOWN
RIGHT SIDE OPPOSITE

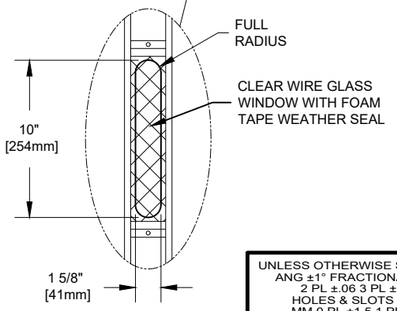

SCALE 3:1
CURTAIN VISION
WINDOW

FOR REFERENCE ONLY

BUBBLE, CAB & AIRCRAFT CLOSURE

UNLESS OTHERWISE SPECIFIED
ANG ±1° FRACTIONAL ±1/16
2 PL ±.06 3 PL ±.030
HOLES & SLOTS ±.015
MM 0 PL ±1.5 1 PL ±.75
INTERPRET DIM AND TOL PER
ASME Y14.5-2009
THIRD ANGLE PROJECTION

DRFTR EDW DATE 02-02-2021
CHKD - DATE -
APVD - DATE -

THIS DOCUMENT CONTAINS
INFORMATION THAT IS
PROPRIETARY AND CONFIDENTIAL
TO JOHN BEAN TECHNOLOGIES
CORPORATION AND ITS AFFILIATES,
AND MAY NOT BE PUBLICLY
DISCLOSED WITHOUT THE EXPRESS
WRITTEN PERMISSION OF JOHN BEAN
TECHNOLOGIES CORPORATION.
UNDER ANY U.S. GOVERNMENT PRIME
CONTRACT THIS INFORMATION SHALL
BE CONSIDERED TO BE
"LIMITED RIGHTS DATA".
© 2021 JBT

Jetway®Systems
Ogden, UT, U.S.A.

TITLE
SUBMITTAL: APRON DRIVE
ERIE INT'L AIRPORT

SIZE	CAGE CODE	DWG NO.	PROJECT	REV
D	54077	SD-16	FAZ-ERI_M	A

SCALE: NONE
WEIGHT: LB: - KG: -

AUTOCAD

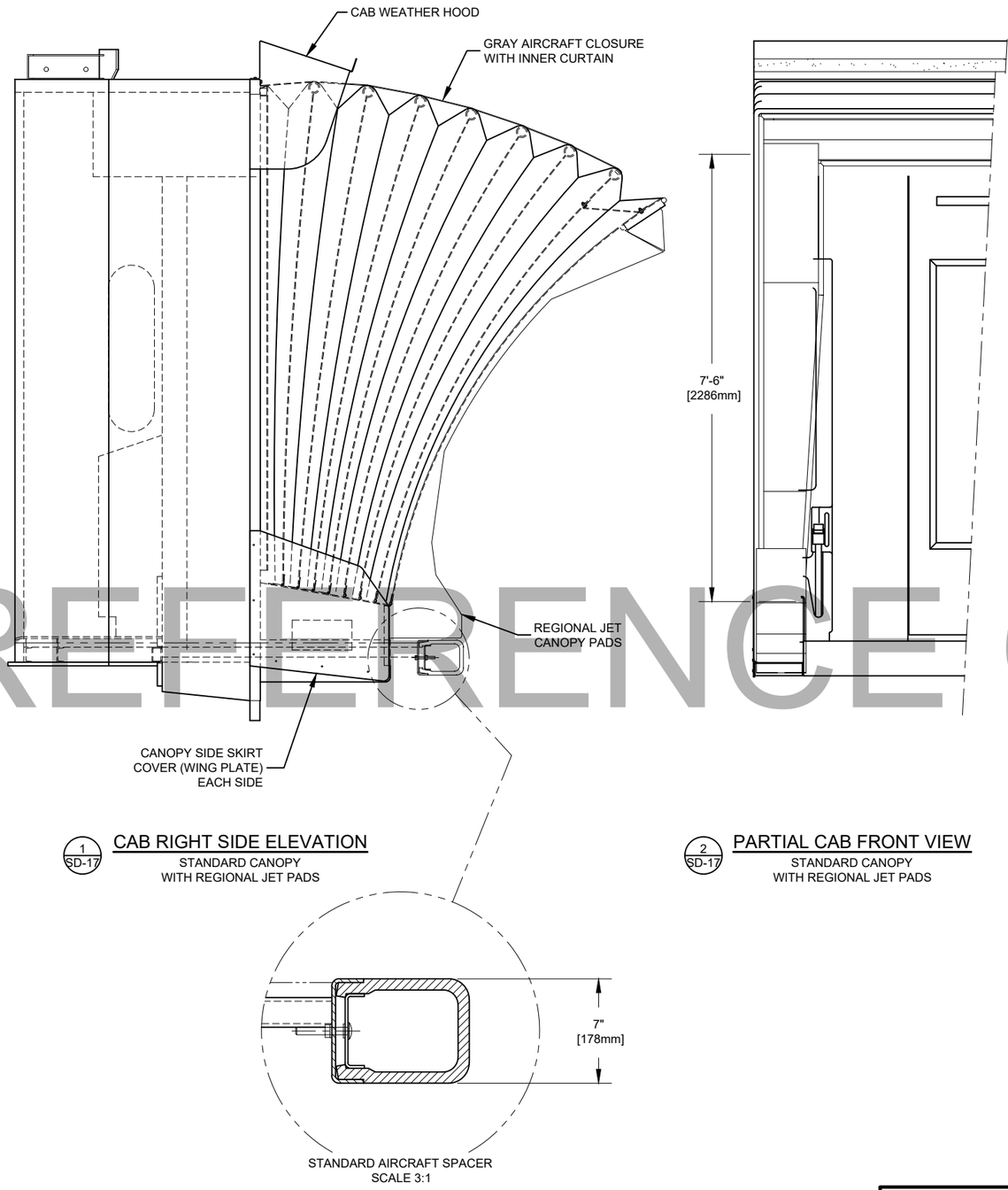

1 SD-17 **CAB RIGHT SIDE ELEVATION**
STANDARD CANOPY
WITH REGIONAL JET PADS

2 SD-17 **PARTIAL CAB FRONT VIEW**
STANDARD CANOPY
WITH REGIONAL JET PADS

FOR REFERENCE ONLY

AIRCRAFT CLOSURE

UNLESS OTHERWISE SPECIFIED
ANG ±1° FRACTIONAL ±1/16
2 PL ±.06 3 PL ±.030
HOLES & SLOTS ±.015
MM 0 PL ±1.5 1 PL ±.75
INTERPRET DIM AND TOL PER
ASME Y14.5-2009
THIRD ANGLE PROJECTION

DRFTR	EDW	DATE	02-02-2021
CHKD	-	DATE	-
APVD	-	DATE	-

THIS DOCUMENT CONTAINS INFORMATION THAT IS PROPRIETARY AND CONFIDENTIAL TO JOHN BEAN TECHNOLOGIES CORPORATION AND ITS AFFILIATES, AND MAY NOT BE PUBLICLY DISCLOSED WITHOUT THE EXPRESS WRITTEN PERMISSION OF JOHN BEAN TECHNOLOGIES CORPORATION. UNDER ANY U.S. GOVERNMENT PRIME CONTRACT THIS INFORMATION SHALL BE CONSIDERED TO BE "LIMITED RIGHTS DATA".
© 2021 JBT

Jetway®Systems
Ogden, UT, U.S.A.

TITLE
SUBMITTAL: APRON DRIVE
ERIE INT'L AIRPORT

SIZE	CAGE CODE	DWG NO.	PROJECT	REV
D	54077	SD-17	FAZ-ERI_M	A

SCALE: NONE
WEIGHT: LB: - KG: -

AUTOCAD

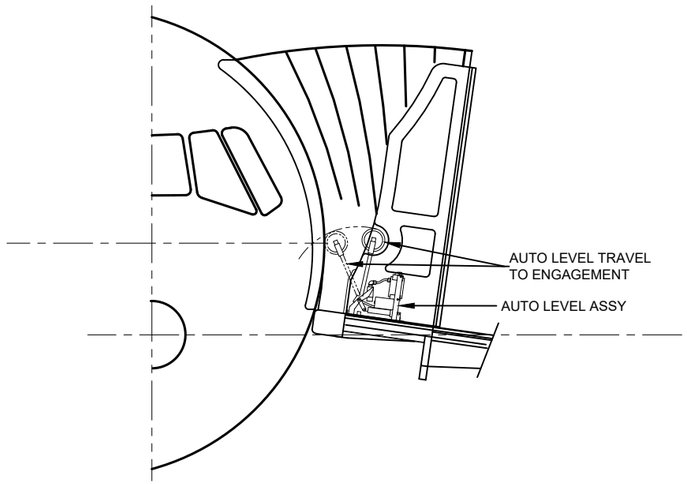

1 SD-18 AIRCRAFT LOADING AUTO LEVEL ASSEMBLY
SHOWN FROM FRONT OF AIRCRAFT

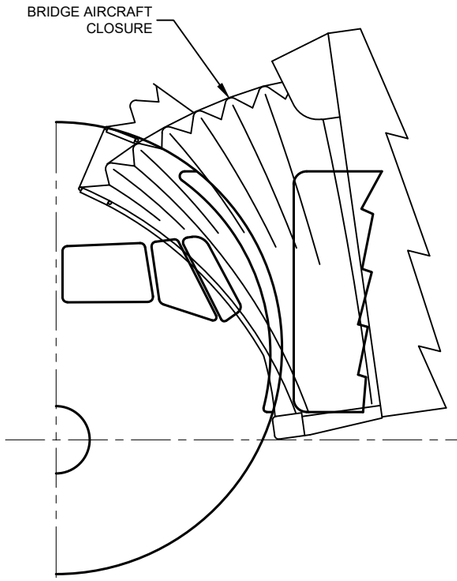

2 SD-18 CANOPY AND PAD AIRCRAFT INTERFACE
SHOWN FROM FRONT OF AIRCRAFT

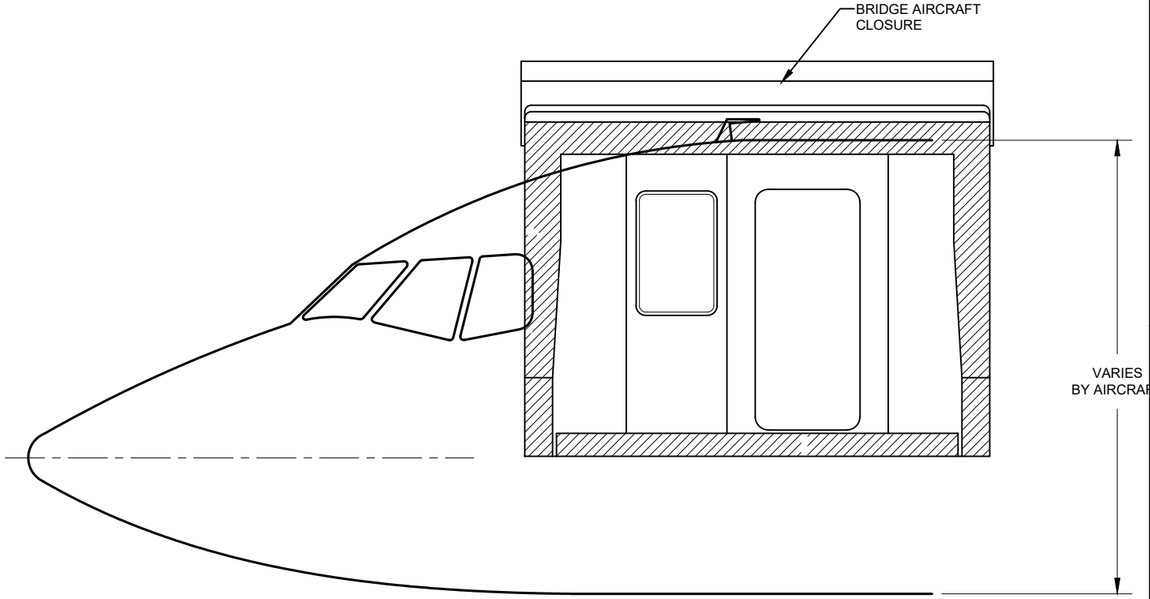

3 SD-18 CANOPY AND PAD AIRCRAFT INTERFACE
LEFT SIDE OF AIRCRAFT

FOR REFERENCE ONLY

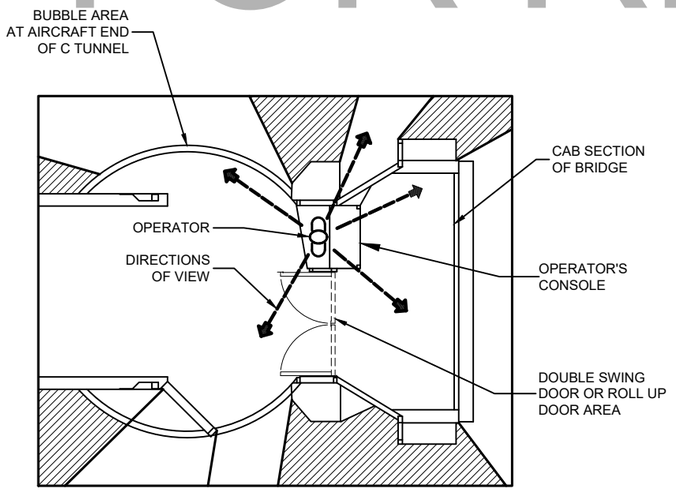

4 SD-18 CONES OF VIEW

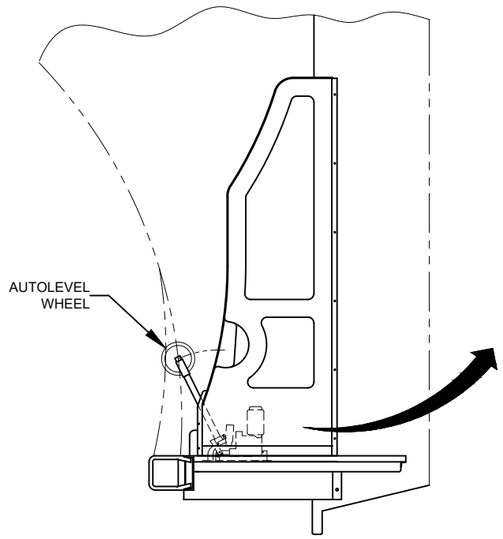

5 SD-18 PARTIAL VIEW OF RIGHT SIDE CAB INTERIOR

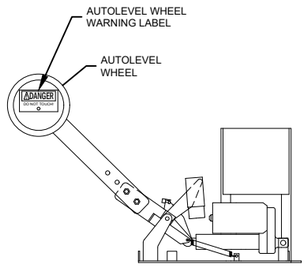

6 SD-18 AUTOLEVEL ASSEMBLY

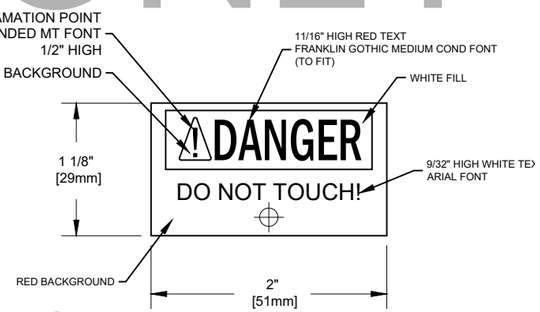

7 SD-18 AUTOLEVEL WHEEL WARNING LABEL

TYPICAL AIRCRAFT INTERFACE & OPERATOR'S CONE OF VIEW

UNLESS OTHERWISE SPECIFIED ANG ±1° FRACTIONAL ±1/16 2 PL ±.06 3 PL ±.030 HOLES & SLOTS ±.015 MM 0 PL ±1.5 1 PL ±.75 INTERPRET DIM AND TOL PER ASME Y14.5-2009 THIRD ANGLE PROJECTION	DRFTR EDW	DATE 02-02-2021	Jetway®Systems Ogden, UT, U.S.A.
	CHKD -	DATE -	TITLE: SUBMITTAL: APRON DRIVE ERIE INT'L AIRPORT
	APVD -	DATE -	
THIS DOCUMENT CONTAINS INFORMATION THAT IS PROPRIETARY AND CONFIDENTIAL TO JOHN BEAN TECHNOLOGIES CORPORATION AND ITS AFFILIATES, AND MAY NOT BE PUBLICLY DISCLOSED WITHOUT THE EXPRESS WRITTEN PERMISSION OF JOHN BEAN TECHNOLOGIES CORPORATION. UNDER ANY U.S. GOVERNMENT PRIME CONTRACT THIS INFORMATION SHALL BE CONSIDERED TO BE "LIMITED RIGHTS DATA". © 2021 JBT	SIZE D	CAGE CODE 54077	DWG NO. SD-18 / PROJECT FAZ-ERI_M / REV A
	SCALE: NONE	WEIGHT: LB: - KG: -	AUTOCAD

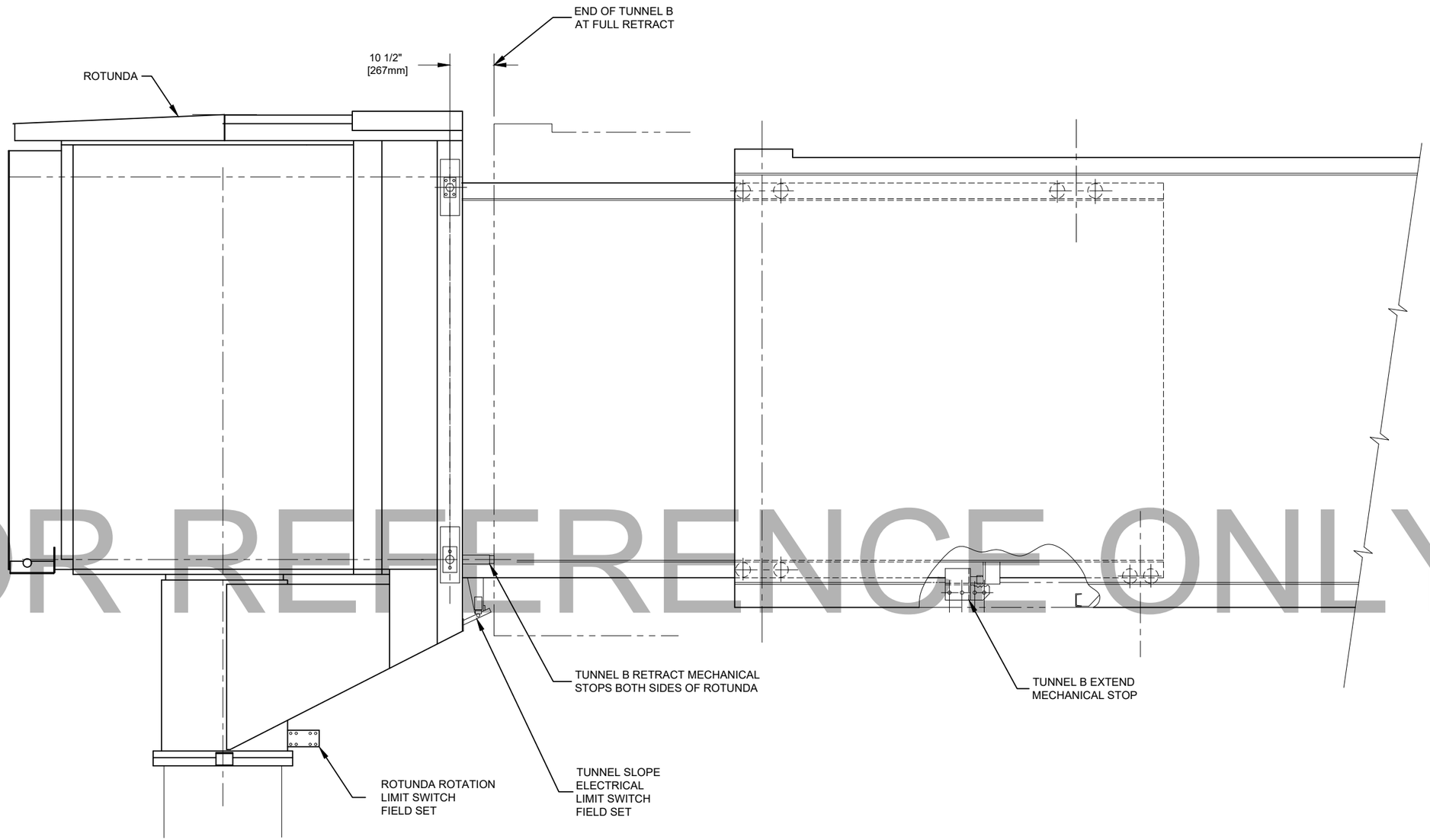

FOR REFERENCE ONLY

1 / SD-19 PARTIAL R.S. ELEVATION

MECHANICAL & ELECTRICAL LIMITS

UNLESS OTHERWISE SPECIFIED
ANG ±1° FRACTIONAL ±1/16
2 PL ±.06 3 PL ±.030
HOLES & SLOTS ±.015
MM 0 PL ±1.5 1 PL ±.75
INTERPRET DIM AND TOL PER
ASME Y14.5-2009

THIRD ANGLE PROJECTION

DRFTR	EDW	DATE	02-02-2021
CHKD	-	DATE	-
APVD	-	DATE	-

THIS DOCUMENT CONTAINS INFORMATION THAT IS PROPRIETARY AND CONFIDENTIAL TO JOHN BEAN TECHNOLOGIES CORPORATION AND ITS AFFILIATES, AND MAY NOT BE PUBLICLY DISCLOSED WITHOUT THE EXPRESS WRITTEN PERMISSION OF JOHN BEAN TECHNOLOGIES CORPORATION. UNDER ANY U.S. GOVERNMENT PRIME CONTRACT THIS INFORMATION SHALL BE CONSIDERED TO BE "LIMITED RIGHTS DATA".
© 2021 JBT

Jetway®Systems
Ogden, UT, U.S.A.

TITLE
SUBMITTAL: APRON DRIVE
ERIE INT'L AIRPORT

SIZE	CAGE CODE	DWG NO.	PROJECT	REV
D	54077	SD-19	FAZ-ERI_M	A

SCALE: NONE
WEIGHT: LB: - KG: -

AUTOCAD

FOR REFERENCE ONLY

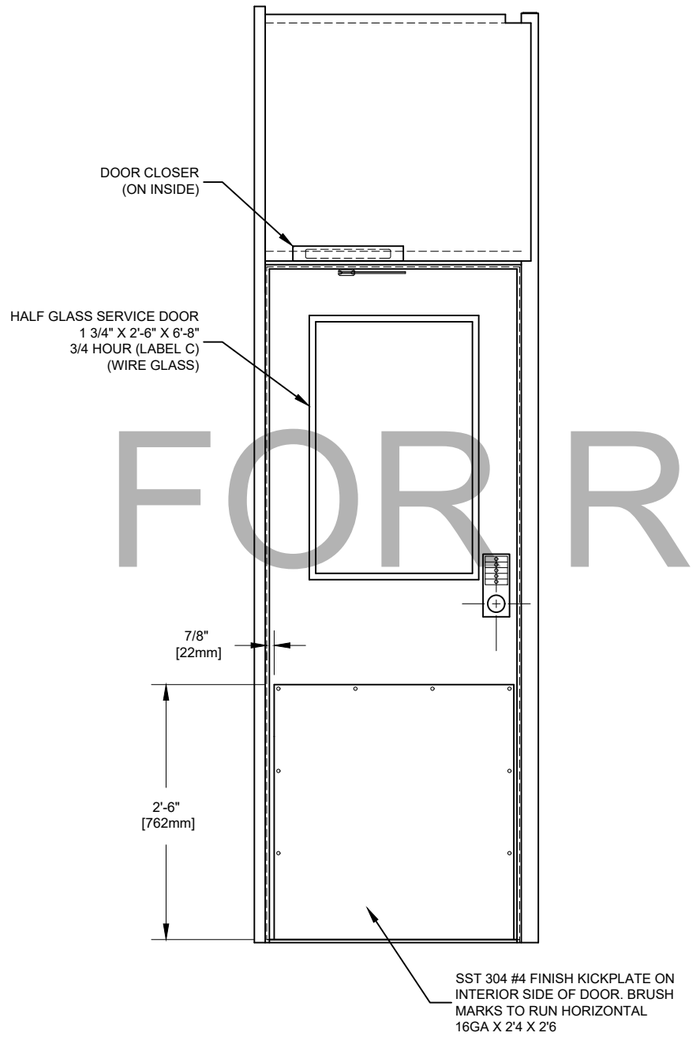

1 SD-20 INTERIOR ELEVATION OF SERVICE DOOR

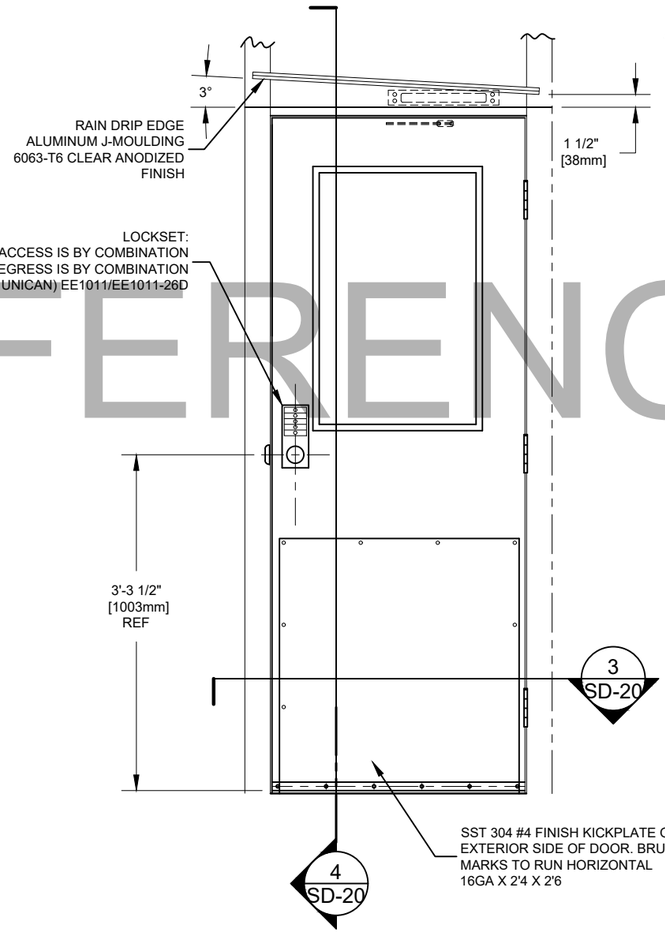

2 SD-20 EXTERIOR ELEVATION OF SERVICE DOOR

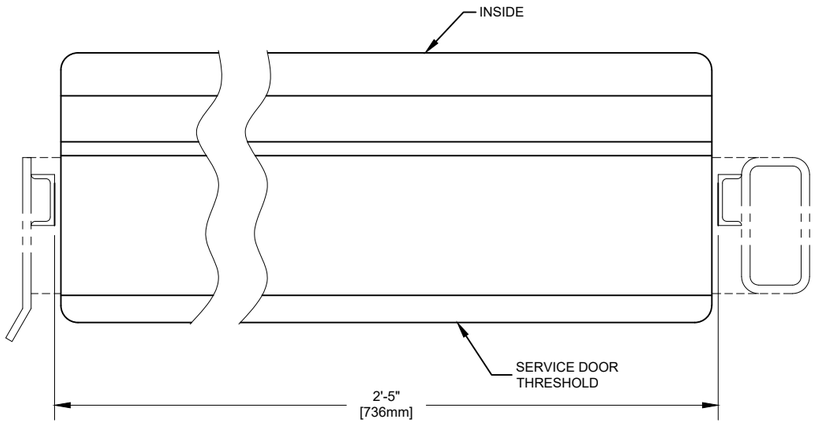

3 SD-20 PLAN VIEW
SCALE 4:1
SERVICE DOOR THRESHOLD
(DOOR NOT SHOWN FOR CLARITY)

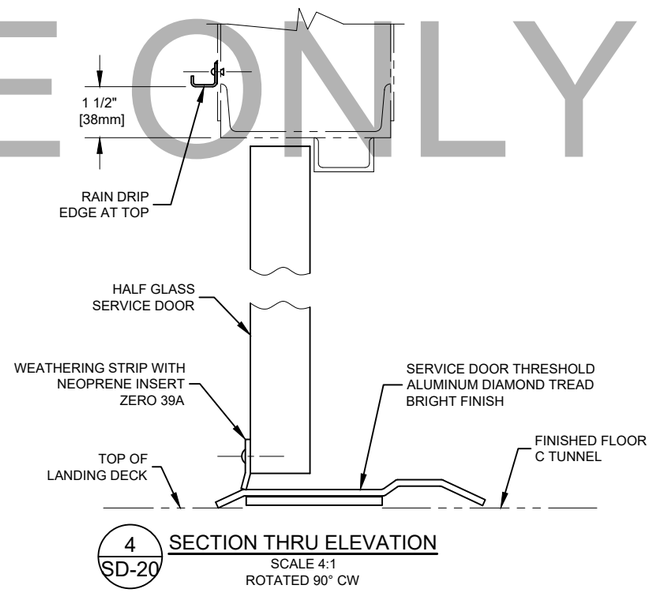

4 SD-20 SECTION THRU ELEVATION
SCALE 4:1
ROTATED 90° CW

SERVICE DOOR DETAILS

UNLESS OTHERWISE SPECIFIED
ANG ±1° FRACTIONAL ±1/16
2 PL ±.06 3 PL ±.030
HOLES & SLOTS ±.015
MM 0 PL ±1.5 1 PL ±.75
INTERPRET DIM AND TOL PER
ASME Y14.5-2009
THIRD ANGLE PROJECTION

DRFTR EDW DATE 02-02-2021
CHKD - DATE -
APVD - DATE -

THIS DOCUMENT CONTAINS INFORMATION THAT IS PROPRIETARY AND CONFIDENTIAL TO JOHN BEAN TECHNOLOGIES CORPORATION AND ITS AFFILIATES, AND MAY NOT BE PUBLICLY DISCLOSED WITHOUT THE EXPRESS WRITTEN PERMISSION OF JOHN BEAN TECHNOLOGIES CORPORATION. UNDER ANY U.S. GOVERNMENT PRIME CONTRACT THIS INFORMATION SHALL BE CONSIDERED TO BE "LIMITED RIGHTS DATA".
© 2021 JBT

Jetway®Systems
Ogden, UT, U.S.A.

TITLE
SUBMITTAL: APRON DRIVE
ERIE INT'L AIRPORT

SIZE	CAGE CODE	DWG NO.	PROJECT	REV
D	54077	SD-20	FAZ-ERI_M	A

SCALE: NONE WEIGHT: LB: - KG: -

AUTOCAD

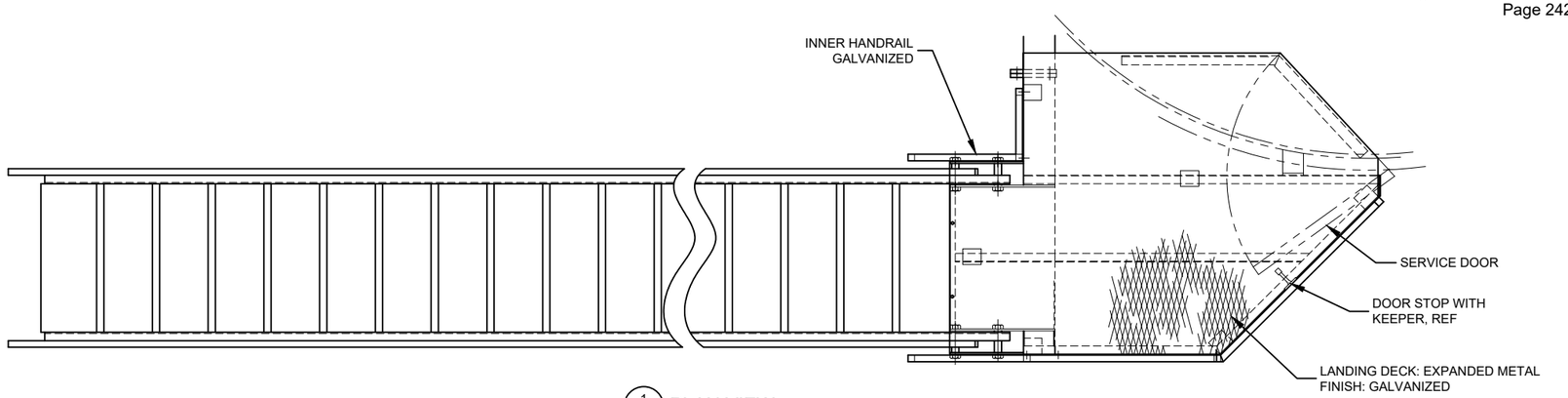

1 SD-21 PLAN VIEW

FOR REFERENCE ONLY

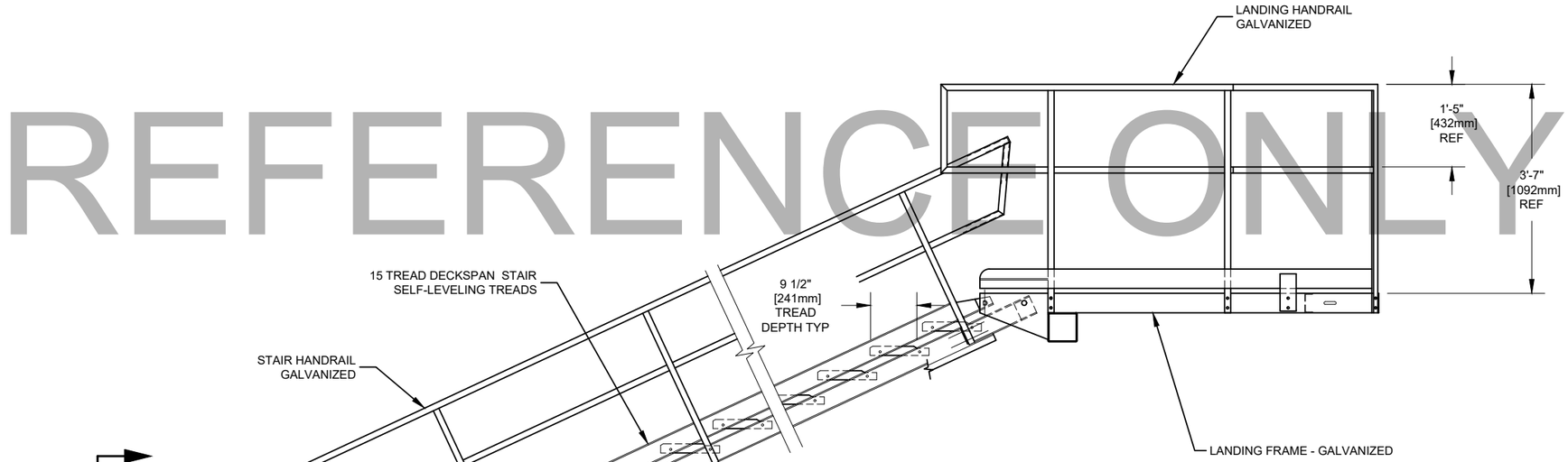

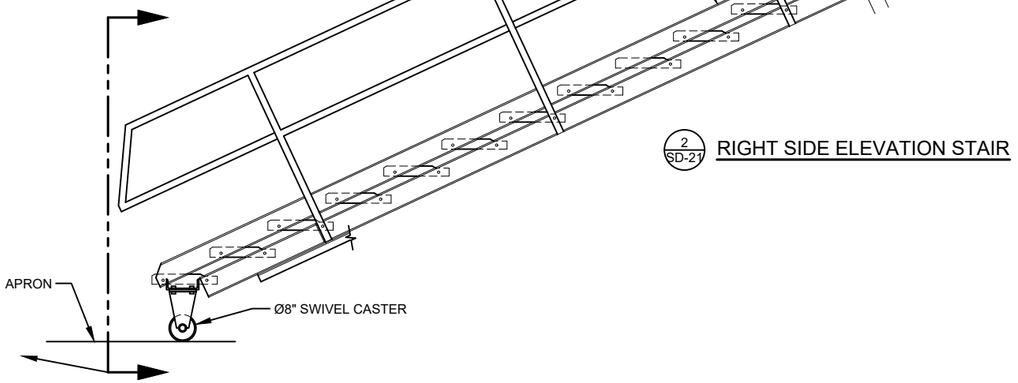

2 SD-21 RIGHT SIDE ELEVATION STAIR

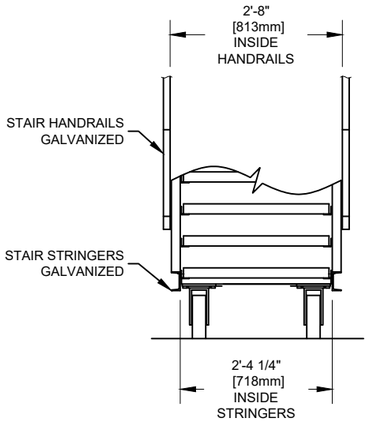

SERVICE DOOR DETAILS

UNLESS OTHERWISE SPECIFIED
ANG ±1° FRACTIONAL ±1/16
2 PL ±.06 3 PL ±.030
HOLES & SLOTS ±.015
MM 0 PL ±1.5 1 PL ±.75
INTERPRET DIM AND TOL PER
ASME Y14.5-2009

THIRD ANGLE PROJECTION

DRFTR	EDW	DATE	02-02-2021
CHKD	-	DATE	-
APVD	-	DATE	-

THIS DOCUMENT CONTAINS INFORMATION THAT IS PROPRIETARY AND CONFIDENTIAL TO JOHN BEAN TECHNOLOGIES CORPORATION AND ITS AFFILIATES, AND MAY NOT BE PUBLICLY DISCLOSED WITHOUT THE EXPRESS WRITTEN PERMISSION OF JOHN BEAN TECHNOLOGIES CORPORATION. UNDER ANY U.S. GOVERNMENT PRIME CONTRACT THIS INFORMATION SHALL BE CONSIDERED TO BE "LIMITED RIGHTS DATA".
© 2021 JBT

Jetway®Systems
Ogden, UT, U.S.A.

TITLE
SUBMITTAL: APRON DRIVE
ERIE INT'L AIRPORT

SIZE	CAGE CODE	DWG NO.	PROJECT	REV
D	54077	SD-20	FAZ-ERI_M	A

SCALE: NONE WEIGHT: LB: - KG: -

AUTOCAD

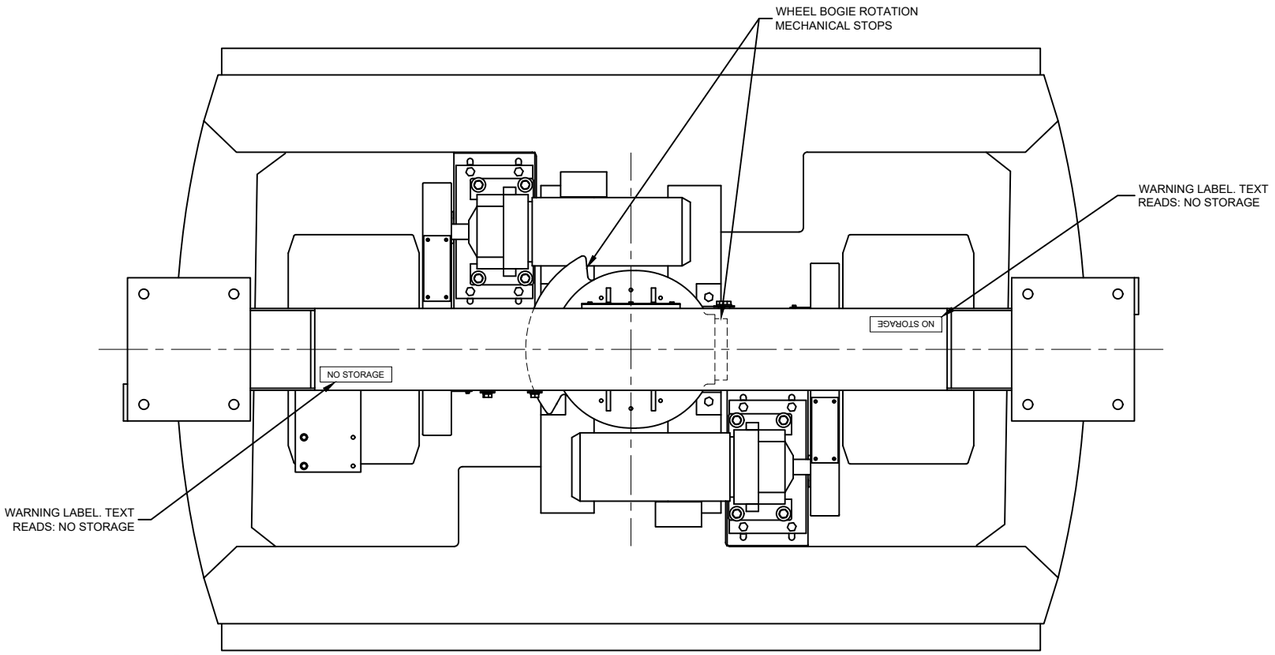

FOR REFERENCE ONLY

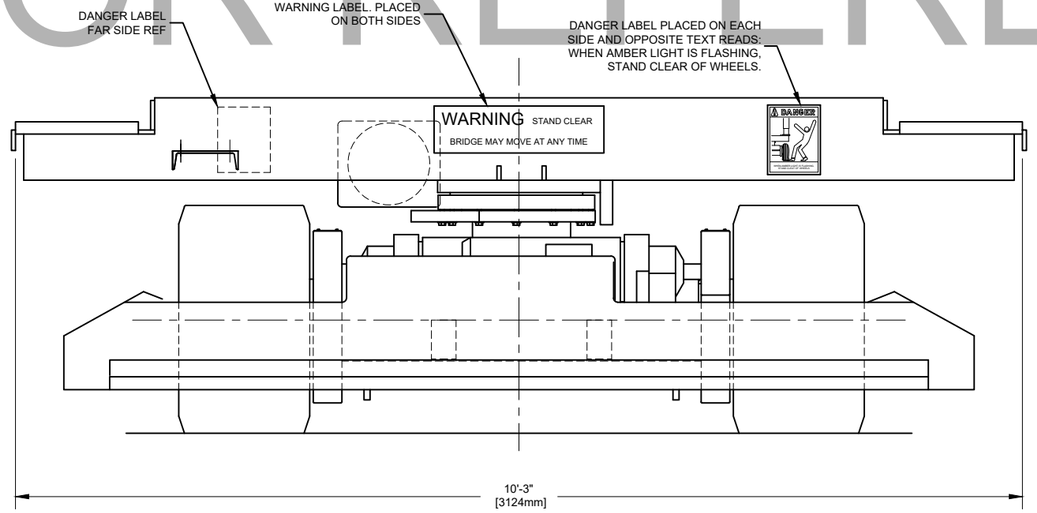

1 SP-3 LOWER DRIVE COLUMN REAR ELEVATION

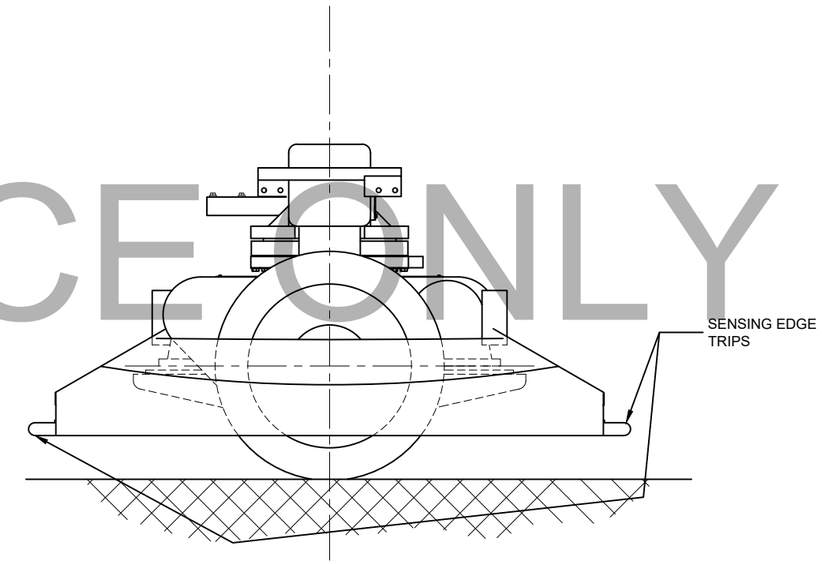

2 SP-3 RIGHT SIDE ELEVATION

2 SP-3

LOWER DRIVE COLUMN & WARNING LABELS
ELECTRO-MECHANICAL VERTICAL DRIVE

UNLESS OTHERWISE SPECIFIED
ANG ±1° FRACTIONAL ±1/16
2 PL ±.06 3 PL ±.030
HOLES & SLOTS ±.015
MM 0 PL ±1.5 1 PL ±.75
INTERPRET DIM AND TOL PER
ASME Y14.5-2009

THIRD ANGLE PROJECTION

DRFTR	EDW	DATE	02-02-2021
CHKD	-	DATE	-
APVD	-	DATE	-

THIS DOCUMENT CONTAINS INFORMATION THAT IS PROPRIETARY AND CONFIDENTIAL TO JOHN BEAN TECHNOLOGIES CORPORATION AND ITS AFFILIATES, AND MAY NOT BE PUBLICLY DISCLOSED WITHOUT THE EXPRESS WRITTEN PERMISSION OF JOHN BEAN TECHNOLOGIES CORPORATION. UNDER ANY U.S. GOVERNMENT PRIME CONTRACT THIS INFORMATION SHALL BE CONSIDERED TO BE "LIMITED RIGHTS DATA".
© 2021 JBT

Jetway®Systems
Ogden, UT, U.S.A.

TITLE
SUBMITTAL: APRON DRIVE
ERIE INT'L AIRPORT

SIZE	CAGE CODE	DWG NO.	PROJECT	REV
D	54077	SP-3	FAZ-ERI_M	A

SCALE: NONE WEIGHT: LB: - KG: -

AUTOCAD

FOR REFERENCE ONLY

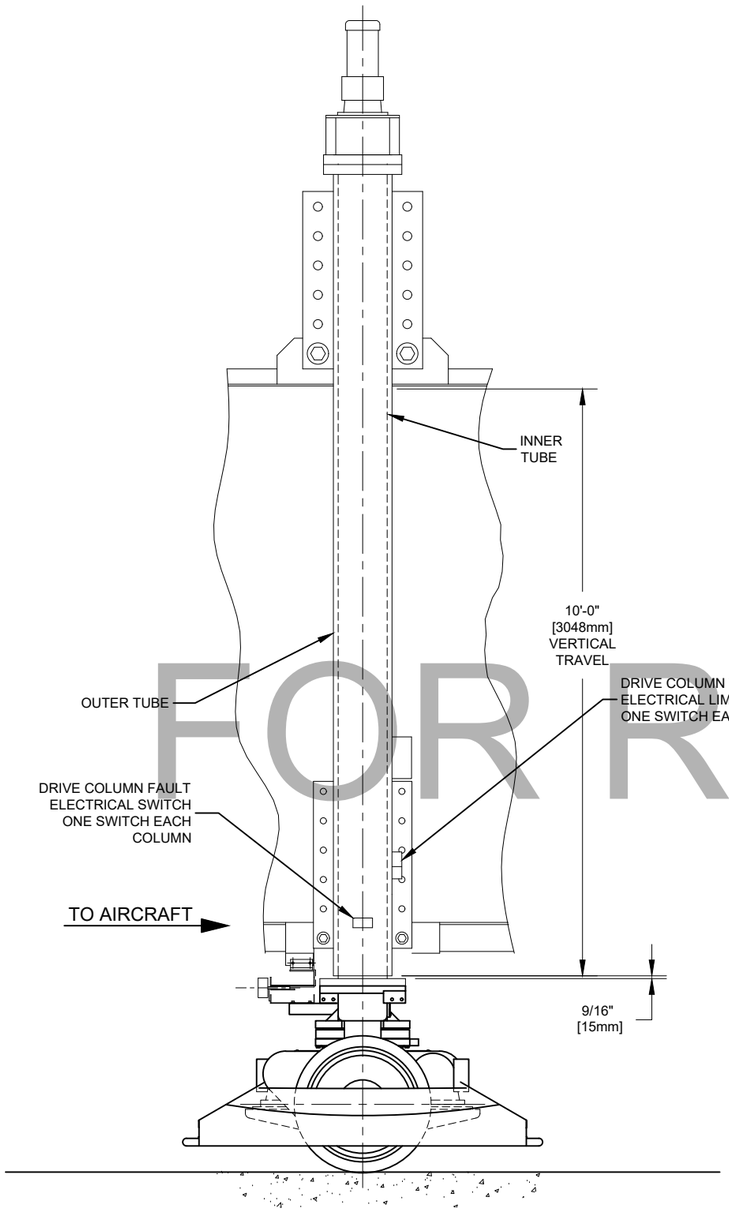

1 / SP-2 PARTIAL RIGHT SIDE ELEVATION

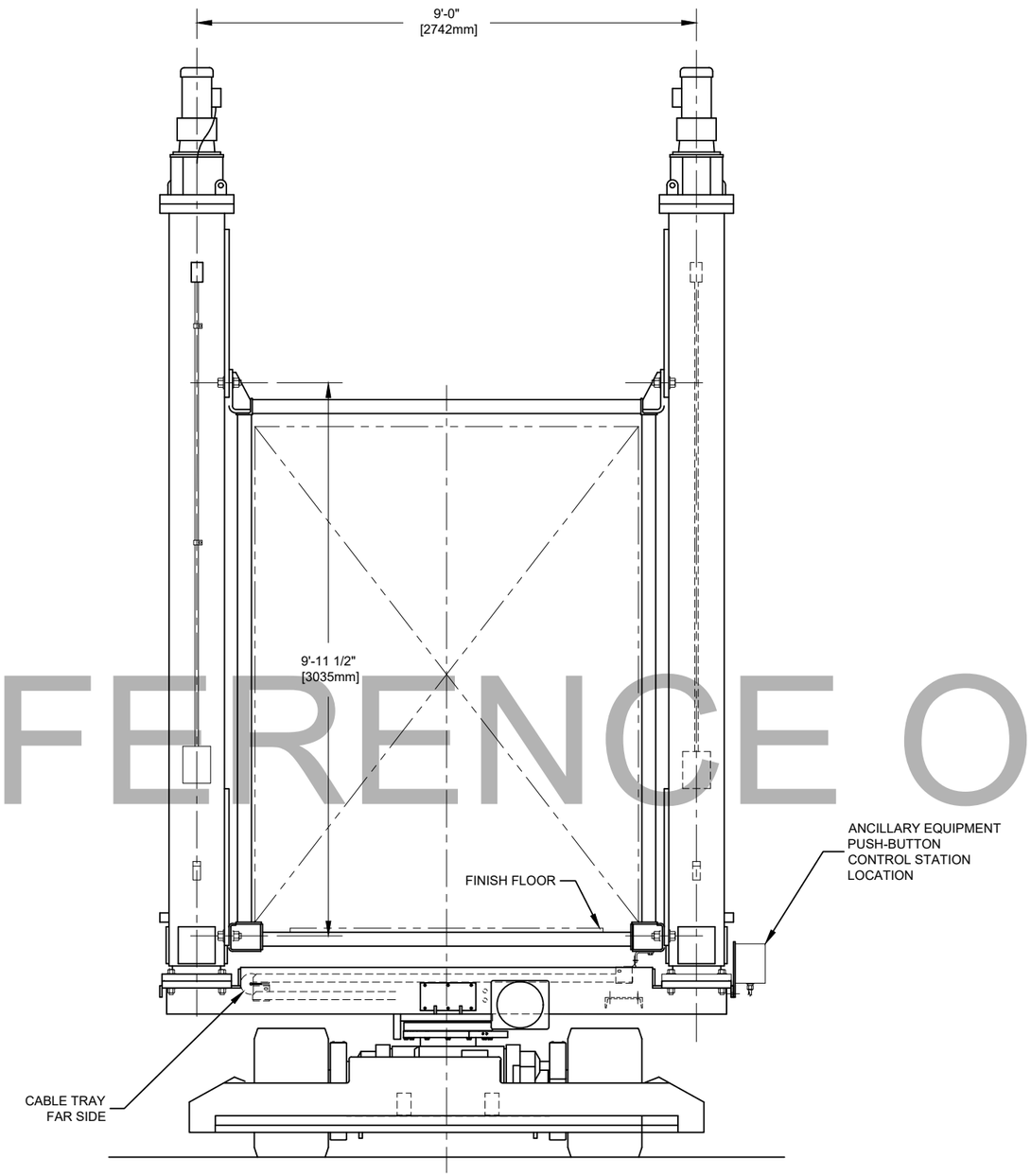

2 / SP-2 FRONT ELEVATION THRU DRIVE COLUMNS

LOOKING TOWARD TERMINAL BUILDING
DRIVE COLUMN BOLTED IN EXTRA LOW RANGE POSITION

VERTICAL DRIVE COLUMN 10'0 ELECTRO-MECHANICAL

UNLESS OTHERWISE SPECIFIED
ANG ±1° FRACTIONAL ±1/16
2 PL ±.06 3 PL ±.030
HOLES & SLOTS ±.015
MM 0 PL ±1.5 1 PL ±.75
INTERPRET DIM AND TOL PER ASME Y14.5-2009
THIRD ANGLE PROJECTION

DRFTR	EDW	DATE	02-02-2021
CHKD	-	DATE	-
APVD	-	DATE	-

THIS DOCUMENT CONTAINS INFORMATION THAT IS PROPRIETARY AND CONFIDENTIAL TO JOHN BEAN TECHNOLOGIES CORPORATION AND ITS AFFILIATES, AND MAY NOT BE PUBLICLY DISCLOSED WITHOUT THE EXPRESS WRITTEN PERMISSION OF JOHN BEAN TECHNOLOGIES CORPORATION. UNDER ANY U.S. GOVERNMENT PRIME CONTRACT THIS INFORMATION SHALL BE CONSIDERED TO BE "LIMITED RIGHTS DATA".
© 2021 JBT

Jetway®Systems
Ogden, UT, U.S.A.

TITLE
SUBMITTAL: APRON DRIVE
ERIE INT'L AIRPORT

SIZE	CAGE CODE	DWG NO.	PROJECT	REV
D	54077	SP-4	FAZ-ERI_M	A

SCALE: NONE
WEIGHT: LB: - KG: -

AUTOCAD

LEFT SIDE ELEVATION

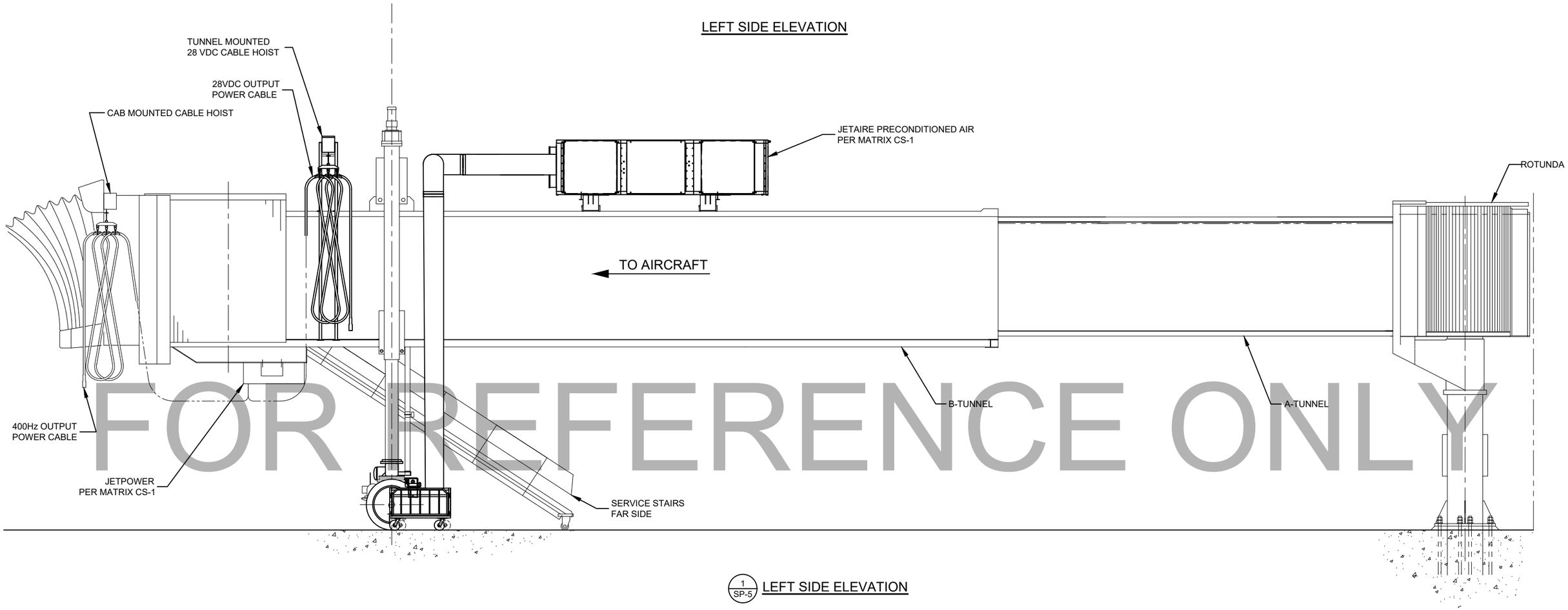

FOR REFERENCE ONLY

1 / SP-5 LEFT SIDE ELEVATION

400Hz JETPOWER CABLE HOISTS

UNLESS OTHERWISE SPECIFIED
ANG ±1° FRACTIONAL ±1/16
2 PL ±.06 3 PL ±.030
HOLES & SLOTS ±.015
MM 0 PL ±1.5 1 PL ±.75
INTERPRET DIM AND TOL PER
ASME Y14.5-2009

THIRD ANGLE PROJECTION

DRFTR	EDW	DATE	02-02-2021
CHKD	-	DATE	-
APVD	-	DATE	-

THIS DOCUMENT CONTAINS INFORMATION THAT IS PROPRIETARY AND CONFIDENTIAL TO JOHN BEAN TECHNOLOGIES CORPORATION AND ITS AFFILIATES, AND MAY NOT BE PUBLICLY DISCLOSED WITHOUT THE EXPRESS WRITTEN PERMISSION OF JOHN BEAN TECHNOLOGIES CORPORATION. UNDER ANY U.S. GOVERNMENT PRIME CONTRACT THIS INFORMATION SHALL BE CONSIDERED TO BE "LIMITED RIGHTS DATA".
© 2021 JBT

Jetway®Systems
Ogden, UT, U.S.A.

TITLE
SUBMITTAL: APRON DRIVE
ERIE INT'L AIRPORT

SIZE	CAGE CODE	DWG NO.	PROJECT	REV
D	54077	SP-5	FAZ-ERI_M	A

SCALE: NONE WEIGHT: LB: - KG: -

AUTOCAD

REVISION HISTORY				
ZONE	REV	DESCRIPTION	ECO NO.	DATE	APPROVED
-	A	PRODUCTION RELEASE	N/A	2021/01/27	TP

NOTES:

1. ALL DETAILS AND WELDS NOT SHOWN ARE PER JETWAY STANDARD DRAWING 2002280
2. SEE AIRPORT LAYOUT, ANCHOR BOLT PLAN AND JETWALK ASSEMBLY DRAWING FOR ORIENTATION AND DIMENSIONAL DATA
3. SEE COLUMN RELEASE FOR BASE PLATE ANCHOR BOLT PATTERN
4. DIMENSIONS ARE THUS: INCHES / MILLIMETERS
5. USED GROUT TO AJUST ELEVATIONS

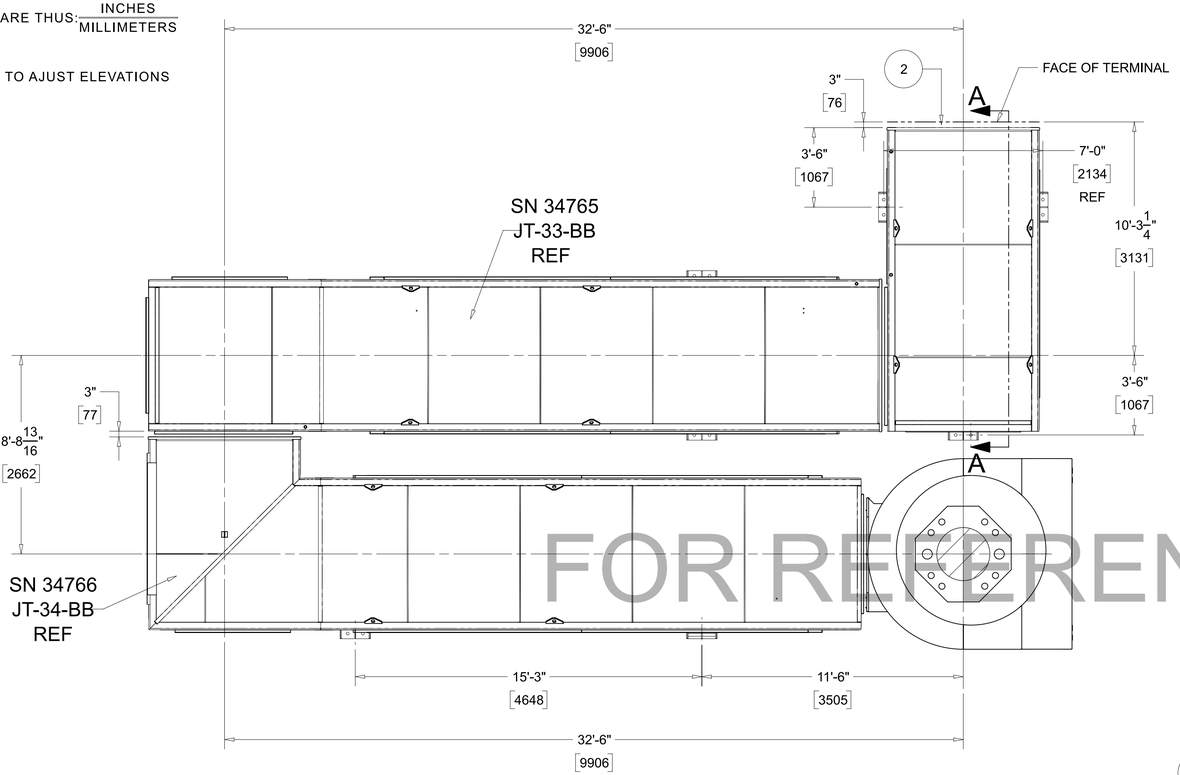

FLOOR PLAN

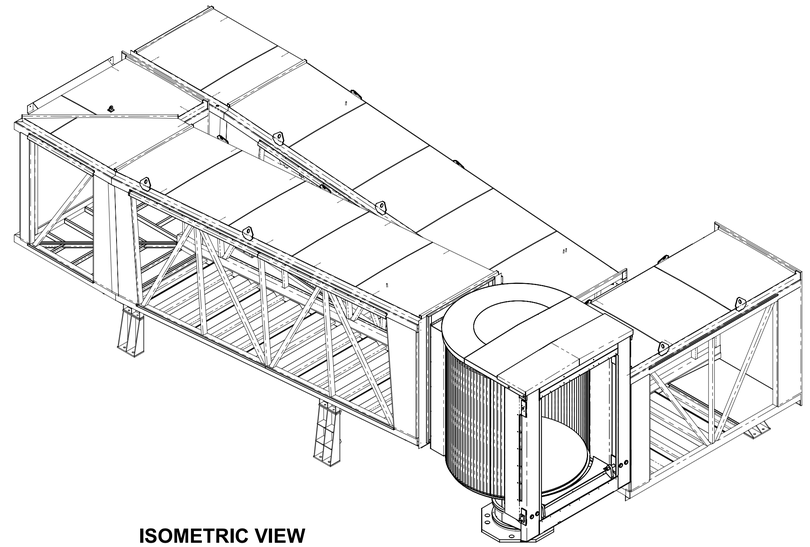

ISOMETRIC VIEW

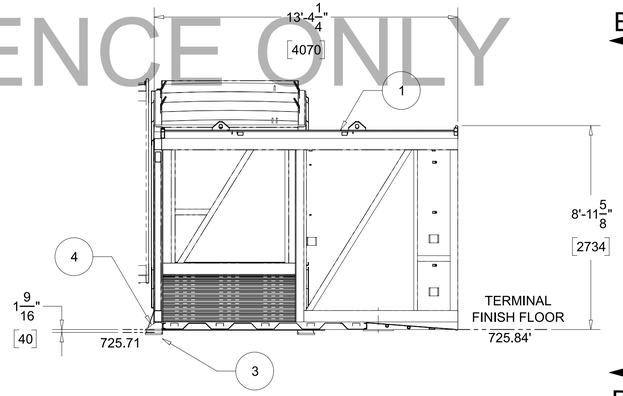

SECTION A-A

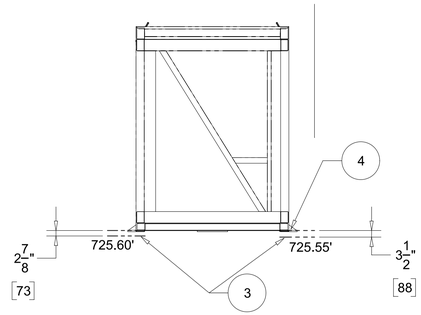

SECTION B-B

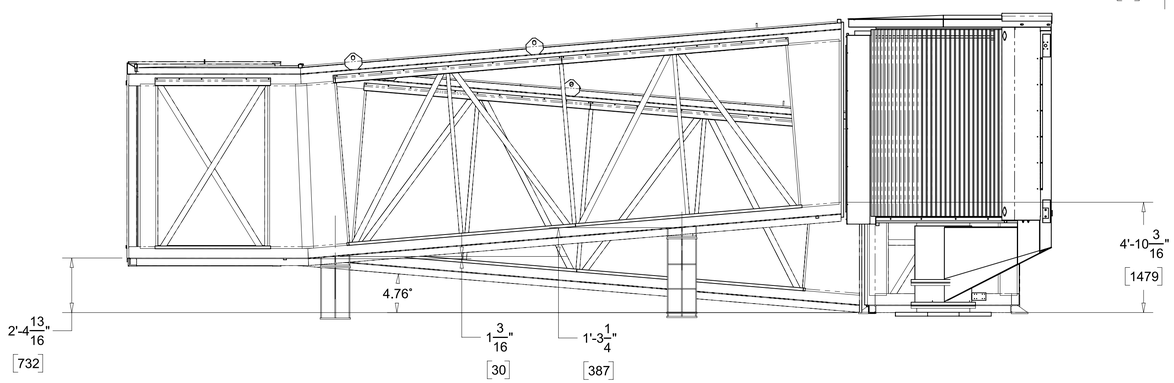

RIGHT SIDE ELEVATION

FOR REFERENCE ONLY

ITEM NO.	PART NUMBER	QTY	UNITS	PART DESCRIPTION
4	3700651.01	2		PKL PL BASE PATT #191 (1X20)
3	7300035	9		GROUT HI PRFM EXP
2	3727422	1		PKL WEA JTW/TERM FRES W/3700
1	2722906	1		JTW 14'0 BB LVL TRUSS WLDMT

AIRCRAFT END ▷
UNLESS OTHERWISE SPECIFIED

FAZ-ERI	
SN	GATE
34764	3

UNLESS OTHERWISE SPECIFIED
ANG ±1° FRACTIONAL ±1/16
2 PL ±.06 3 PL ±.030
HOLES & SLOTS ±.015
MM 0 PL ±1.5 1 PL ±.75
INTERPRET DIM AND TOL PER ASME Y14.5-2009
THIRD ANGLE PROJECTION

DRFTR	TP	2021/01/27
CHKD	KJB	2021/01/27
APVD		

THIS DOCUMENT CONTAINS INFORMATION THAT IS PROPRIETARY AND CONFIDENTIAL TO JOHN BEAN TECHNOLOGIES CORPORATION AND ITS AFFILIATES, AND MAY NOT BE PUBLICLY DISCLOSED WITHOUT THE EXPRESS WRITTEN PERMISSION OF JOHN BEAN TECHNOLOGIES CORPORATION. UNDER ANY U.S. GOVERNMENT PRIME CONTRACT THIS INFORMATION SHALL BE CONSIDERED TO BE "LIMITED RIGHTS DATA".
©2021 JBT

Jetway® Systems
Ogden, UT, U.S.A.

TITLE
FIELD ERECTION JTW
14'0 BB LVL TRUSS

SIZE	CAGE CODE	DWG NO.	REV
D	54077	2722905	A

SCALE: NTS | WEIGHT: LB: - KG: - | SHEET 1 OF 1

REVISION HISTORY				
ZONE	REV	DESCRIPTION	ECO NO.	DATE	APPROVED
-	A	PRODUCTION RELEASE	N/A	2021/01/28	TP

NOTES:

1. ALL DETAILS AND WELDS NOT SHOWN ARE PER JETWAY STANDARD DRAWING 2002280
2. SEE AIRPORT LAYOUT, ANCHOR BOLT PLAN AND JETWALK ASSEMBLY DRAWING FOR ORIENTATION AND DIMENSIONAL DATA
3. SEE COLUMN RELEASE FOR BASE PLATE ANCHOR BOLT PATTERN
4. DIMENSIONS ARE THUS: INCHES / MILLIMETERS
5. △5 USED GROUT TO AJUST ELEVATION

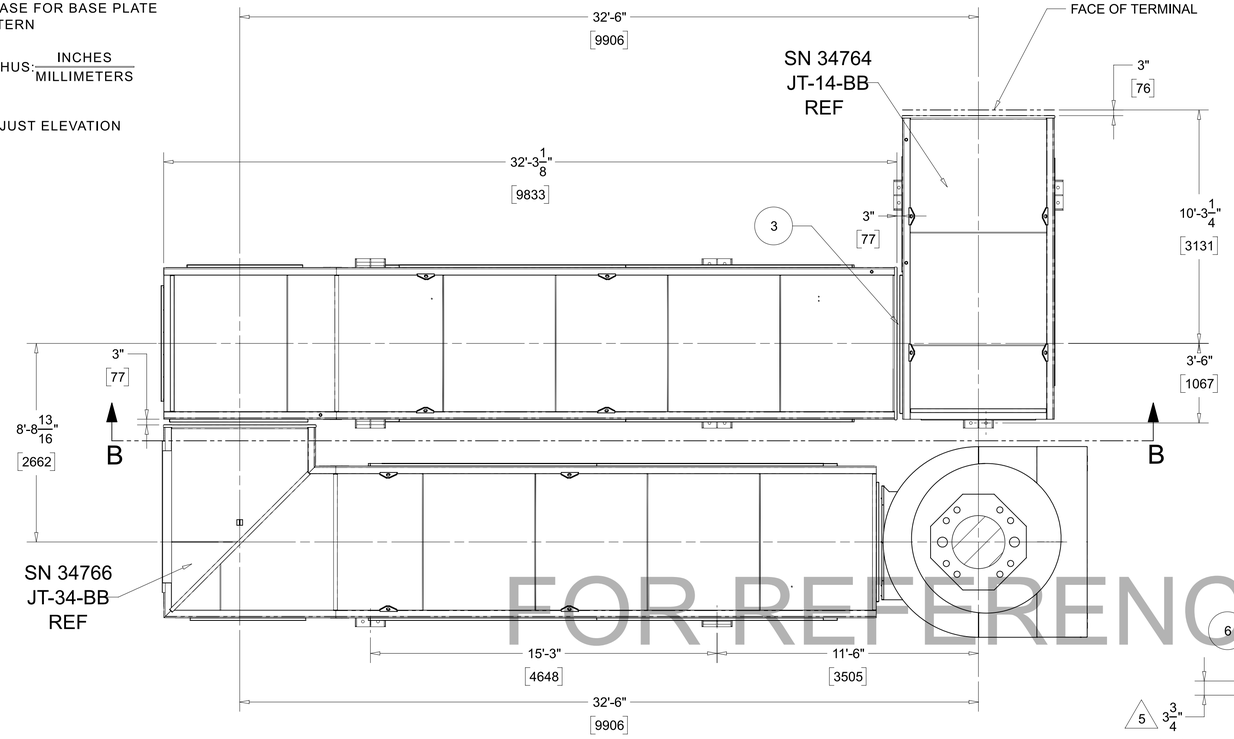

FLOOR PLAN

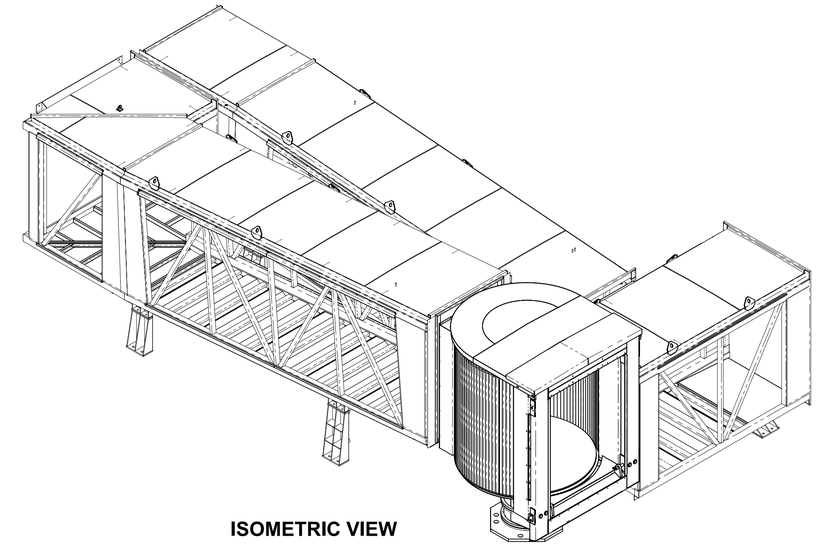

ISOMETRIC VIEW

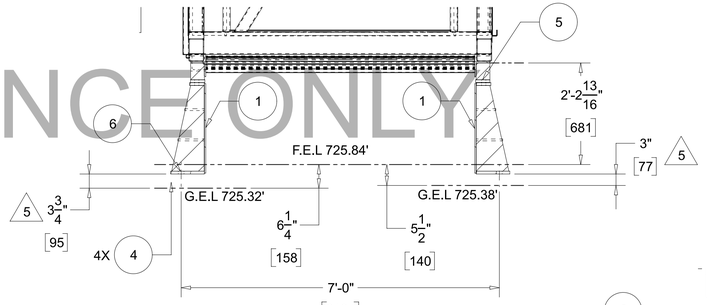

SECTION D-D

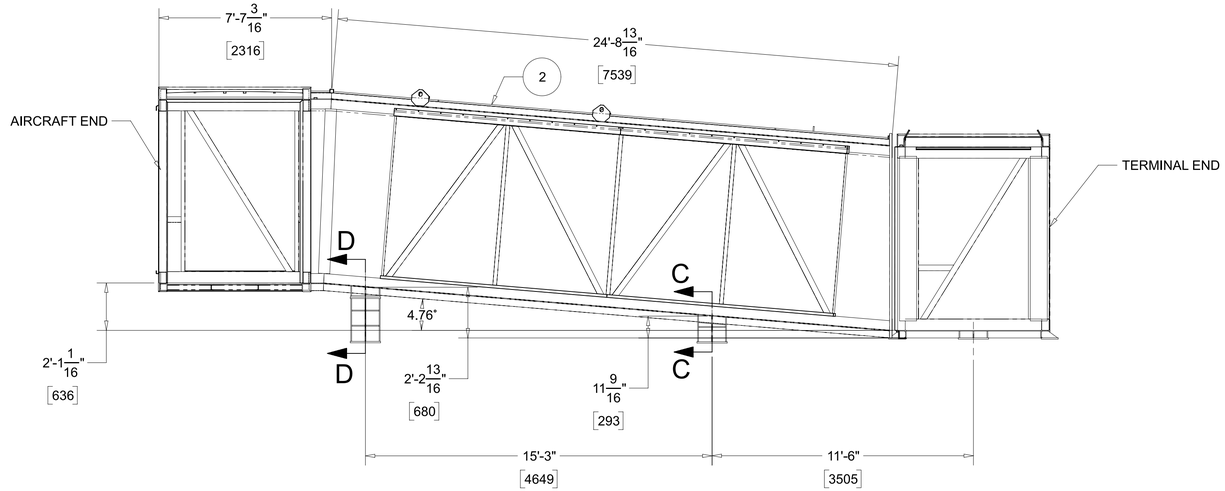

SECTION B-B

RIGHT SIDE ELEVATION

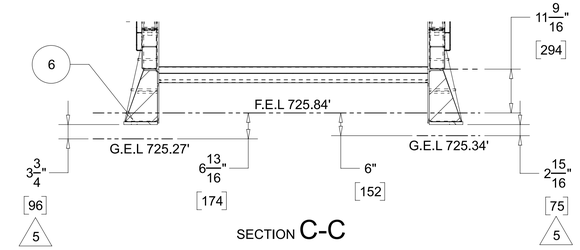

SECTION C-C

ITEM NO.	PART NUMBER	QTY	UNITS	PART DESCRIPTION
6	3700651.01	2		PKL PL BASE PATT #191 (1X20)
5	3739187	1		PKL COL MTG JTW (2100981) BLT-ON
4	7300035	12		GROUT HI PRFM EXP
3	3727422	1		PKL WEA JTW/TERM FRES W/3700
2	2723077	1		JTW 33'0 BB SLP/LVL TRUSS WLDMT
1	2722916	2		PL BASE #191 HEIGHT 2'0 1/8 BLT-ON

AIRCRAFT END ▷
UNLESS OTHERWISE SPECIFIED

FAZ-ERI	
SN	GATE
34765	3

UNLESS OTHERWISE SPECIFIED
ANG ±1° FRACTIONAL ±1/16
2 PL ±.06 3 PL ±.030
HOLES & SLOTS ±.015
MM 0 PL ±1.5 1 PL ±.75
INTERPRET DIM AND TOL PER ASME Y14.5-2009
THIRD ANGLE PROJECTION

DRFTR	TP	DATE 2021/01/28
CHKD	KJB	DATE 2021/01/28
APVD		DATE

THIS DOCUMENT CONTAINS INFORMATION THAT IS PROPRIETARY AND CONFIDENTIAL TO JOHN BEAN TECHNOLOGIES CORPORATION AND ITS AFFILIATES, AND MAY NOT BE PUBLICLY DISCLOSED WITHOUT THE EXPRESS WRITTEN PERMISSION OF JOHN BEAN TECHNOLOGIES CORPORATION. UNDER ANY U.S. GOVERNMENT PRIME CONTRACT THIS INFORMATION SHALL BE CONSIDERED TO BE "LIMITED RIGHTS DATA".
©2021 JBT

Jetway® Systems
Ogden, UT, U.S.A.

TITLE
FIELD ERECTION JTW 33'0 BB SLP/LVL GLASS TRUSS

SIZE	CAGE CODE	DWG NO.	REV
D	54077	2723076	A

SCALE: NTS | WEIGHT: LB: - KG: - | SHEET 1 OF 1

FOR REFERENCE ONLY

REVISION HISTORY				
ZONE	REV	DESCRIPTION	ECO NO.	DATE	APPROVED
-	A	PRODUCTION RELEASE	N/A	2021/01/28	TP

NOTES:

1. ALL DETAILS AND WELDS NOT SHOWN ARE PER JETWAY STANDARD DRAWING 2002280
2. SEE AIRPORT LAYOUT, ANCHOR BOLT PLAN AND JETWALK ASSEMBLY DRAWING FOR ORIENTATION AND DIMENSIONAL DATA
3. SEE COLUMN RELEASE FOR BASE PLATE ANCHOR BOLT PATTERN
4. DIMENSIONS ARE THUS: INCHES / MILLIMETERS
5. USED GROUT TO AJUST ELEVATION

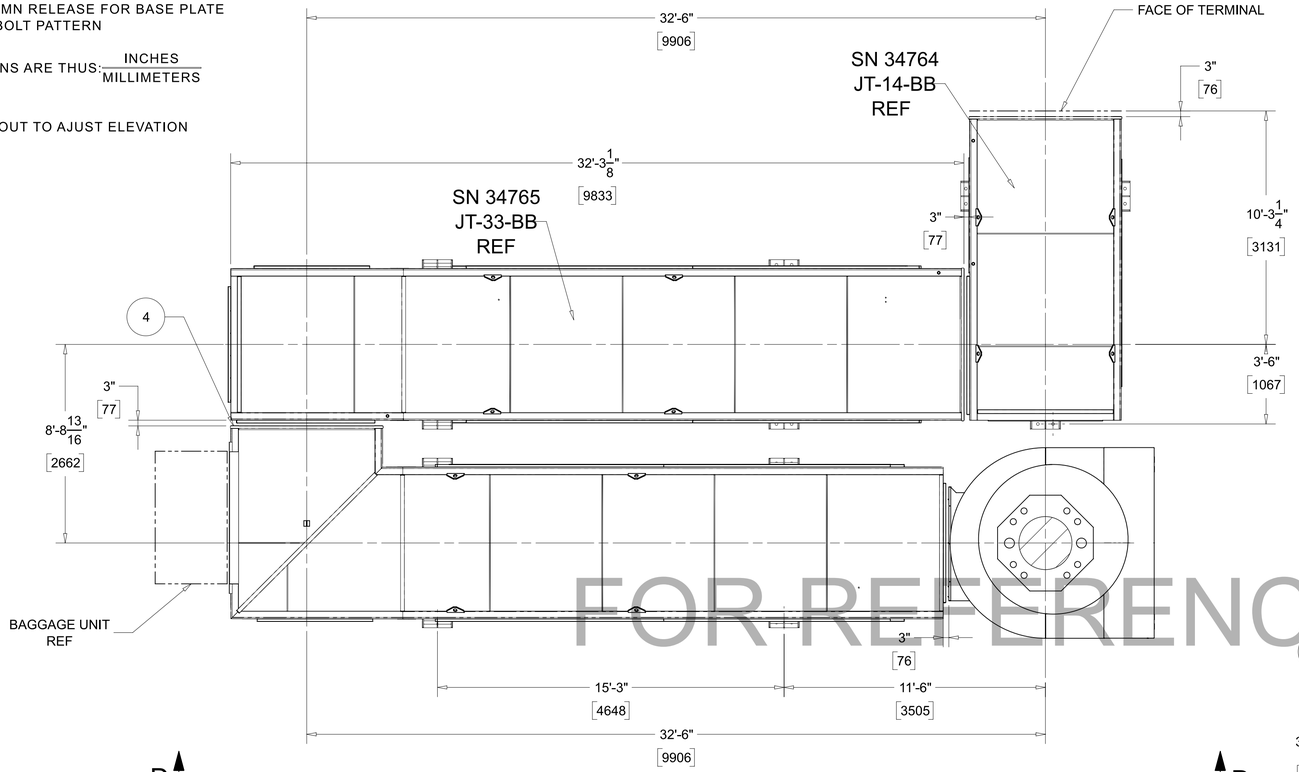

FLOOR PLAN

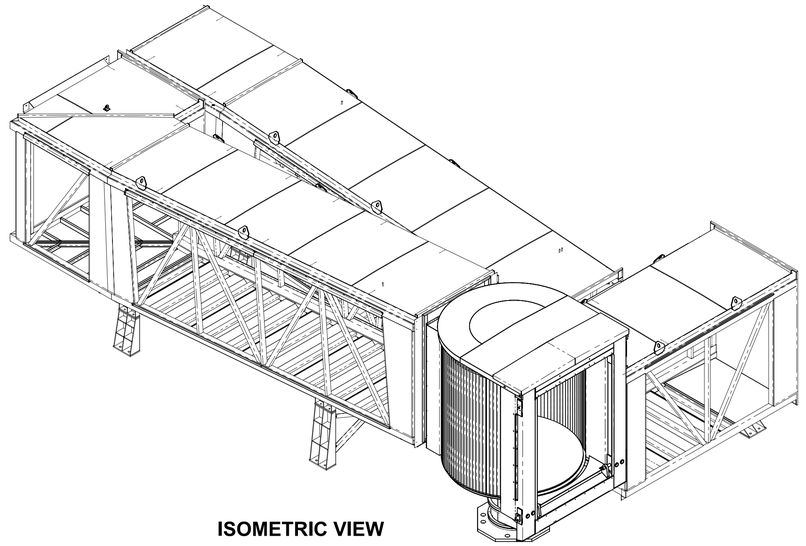

ISOMETRIC VIEW

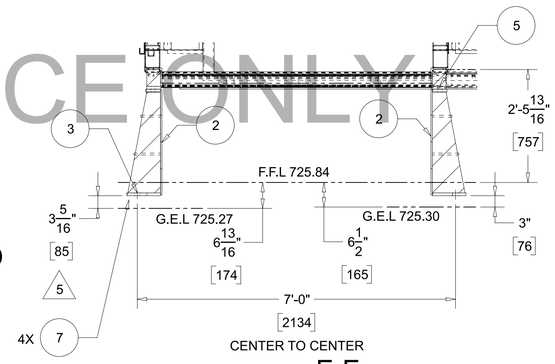

CENTER TO CENTER
SECTION E-E

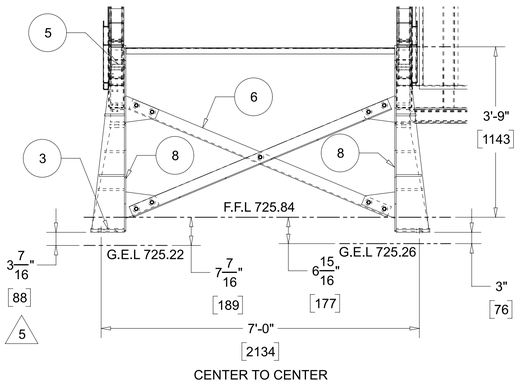

CENTER TO CENTER
SECTION F-F

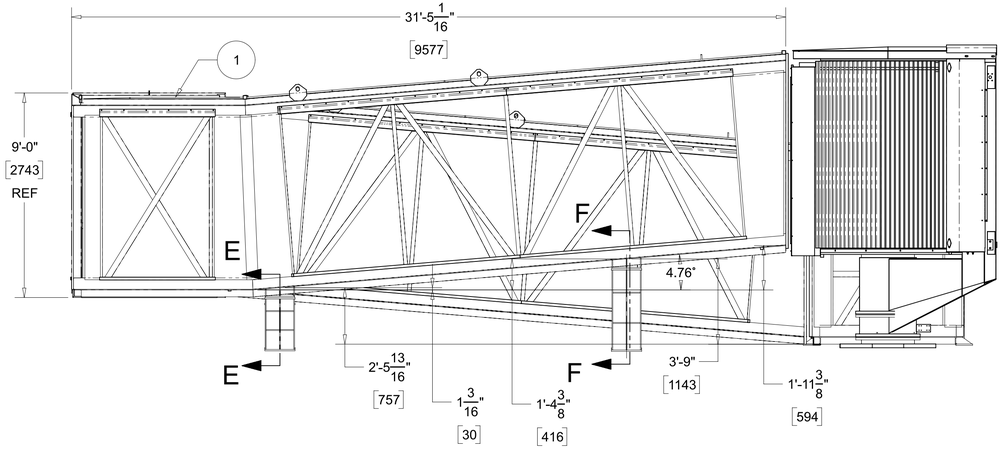

SECTION D-D
RIGHT SIDE ELEVATION

AIRCRAFT END ▷
UNLESS OTHERWISE SPECIFIED

ITEM NO.	PART NUMBER	QTY	UNITS	PART DESCRIPTION
8	2723103	2		PL BASE #191 HEIGHT 3'7 5/8 BLT-ON
7	7300035	12		GROUT HI PRFM EXP
6	3744854	1		PKL #191 CROSS BRACE FSTNR
5	3739187	2		PKL COL MTG JTW (2100981) BLT-ON
4	3727422	1		PKL WEA JTW/TERM FRES W/3700
3	3700651.01	2		PKL PL BASE PATT #191 (1X20)
2	2723102	2		PL BASE #191 HEIGHT 2'4 1/8 BLT-ON
1	2723086	1		JTW 34'0 BB LVL/SKEW/SLP TRUSS WLDMT

FAZ-ERI	
SN	GATE
34766	3

UNLESS OTHERWISE SPECIFIED
ANG ±1° FRACTIONAL ±1/16
2 PL ±.06 3 PL ±.030
HOLES & SLOTS ±.015
MM 0 PL ±1.5 1 PL ±.75
INTERPRET DIM AND TOL PER ASME Y14.5-2009
THIRD ANGLE PROJECTION

DRFTR	TP	DATE 2021/01/28
CHKD	KJB	DATE 2021/01/28
APVD		DATE

THIS DOCUMENT CONTAINS INFORMATION THAT IS PROPRIETARY AND CONFIDENTIAL TO JOHN BEAN TECHNOLOGIES CORPORATION AND ITS AFFILIATES, AND MAY NOT BE PUBLICLY DISCLOSED WITHOUT THE EXPRESS WRITTEN PERMISSION OF JOHN BEAN TECHNOLOGIES CORPORATION. UNDER ANY U.S. GOVERNMENT PRIME CONTRACT THIS INFORMATION SHALL BE CONSIDERED TO BE "LIMITED RIGHTS DATA".
©2021 JBT

Jetway® Systems
Ogden, UT, U.S.A.

TITLE
FIELD ERECTION JTW 34'0 BB LVL/SLP GLASS TRUSS

SIZE	CAGE CODE	DWG NO.	REV
D	54077	2723085	A
SCALE: NTS	WEIGHT: LB: - KG: -	SHEET 1 OF 1	

FOR REFERENCE ONLY

REVISIONS HISTORY						
SHT	ZONE	REV	DESCRIPTION	DRAFTER	DATE	APPROVED
--	---	A	SUBMITTAL	----	2-1-21	JML

Jetway Systems

ERIE MUNICIPAL AIRPORT
ERIE Municipal Airport (ERI)

JBT Corporation, Jetway Systems

DRAWING INDEX	
DRAWING NUMBER	DRAWING TITLE
ECS-1	COVER SHEET (EQUIPMENT CONFIGURATION)
EGA-1	ELECTRICAL GENERAL ARRANGEMENT - DEVICE LOCATIONS
ECE-1	CUSTOMER ELECTRICAL REQUIREMENT (ADD MORE AS NECESSARY)
EDP-1	LAYOUT - ROTUNDA DISTRIBUTION PANEL
EDP-2	INTERCONNECTION - ROTUNDA DISTRIBUTION PANEL
ER1-1	LAYOUT - UPPER ROTUNDA R-1 J-BOX
ER1-2	INTERCONNECTION - UPPER ROTUNDA R-1 J-BOX
EFP-1	HMI FACEPLATE VISUAL AID (CONTROL CONSOLE)
ECC-1	CABLE CARRIER SYSTEM
LPLTG-7	LIGHTING LAYOUT - LOW PROFILE 24VDC LIGHTING AT2 61/95
ECL-1	CONSOLE LAYOUT AND ACCESSORIES
EHMI-1	HMI OPTIONS SCREENS
EUC-1	LAYOUT - UPPER CONSOLE
EUC-2	INTERCONNECT - UPPER CONSOLE
EWB-1	WHEEL BOGIE SAFETY - E-STOP'S, BEACONS, WARNING BELL, ETC.
ESP-1	SPECIALS - CAB FLOOR DE-ICER
ESP-7	SPECIAL - CONSOLE SIDEWALL PROVISIONS
ESP-13	SPECIAL - CAB HOIST
ESP-14	SPECIAL - TUNNEL HOIST

GATE EQUIPMENT CONFIGURATION						
GATE NO.	PASSENGER BOARDING BRIDGE	JETWALK / CORRIDOR	INCOMING 400HZ CA/WIRE SIZE	400HZ	INCOMING PCA CA/WIRE SIZE	PRE-CONDITIONED AIR (PCA)
3	AT2 61/95-125R	JT-14-BB / JT-33-BB / JT-34-BB	3-1/0 1C WIRES W/#6AWG GND	90kVA JTP W/28VDC 125A BREAKER	3-1/0 1C WIRES W/#6AWG GND	SJ-70 125A BREAKER

FOR REFERENCE ONLY

UNLESS OTHERWISE SPECIFIED
ANG ±1° FRACTIONAL ±1/16
2 PL ±.06 3 PL ±.030
HOLES & SLOTS ±.015
MM 0 PL ±1.5 1 PL ±.75
INTERPRET DIM AND TOL PER
ASME Y14.5-2009

THIRD ANGLE PROJECTION

DRFTR	JML	02/01/2021
CHKD	AC	02/01/2021
APVD	AC	02/01/2021

THIS DOCUMENT CONTAINS INFORMATION THAT IS PROPRIETARY AND CONFIDENTIAL TO JOHN BEAN TECHNOLOGIES CORPORATION AND ITS AFFILIATES, AND MAY NOT BE PUBLICLY DISCLOSED WITHOUT THE EXPRESS WRITTEN PERMISSION OF JOHN BEAN TECHNOLOGIES CORPORATION. UNDER ANY U.S. GOVERNMENT PRIME CONTRACT THIS INFORMATION SHALL BE CONSIDERED TO BE "LIMITED RIGHTS DATA".

© 2021 JBT

Jetway® Systems
Ogden, UT, U.S.A.

TITLE
ELECTRICAL SUBMITTAL PBB
APRON DRIVE ERIE
INTERNATIONAL AIRPORT

SIZE	CAGE CODE	DWG NO.	PROJECT	REV
D	54077	ECS-1	FAZ-ERI_E	A

SCALE: NONE WEIGHT: LB: KG:

AUTOCAD

REVISIONS HISTORY					
SHT	ZONE	REV	DESCRIPTION	DATE	APPROVED
--	---	A	SUBMITTAL	---	02-01-21 JML

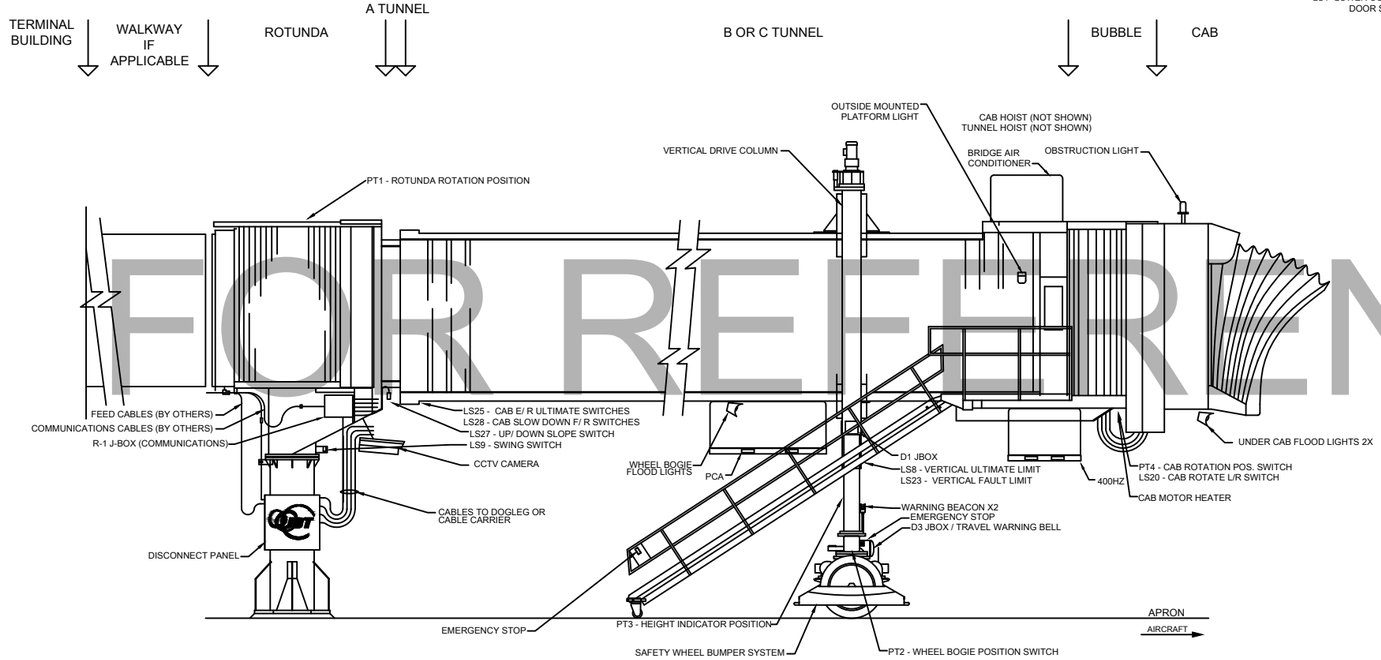

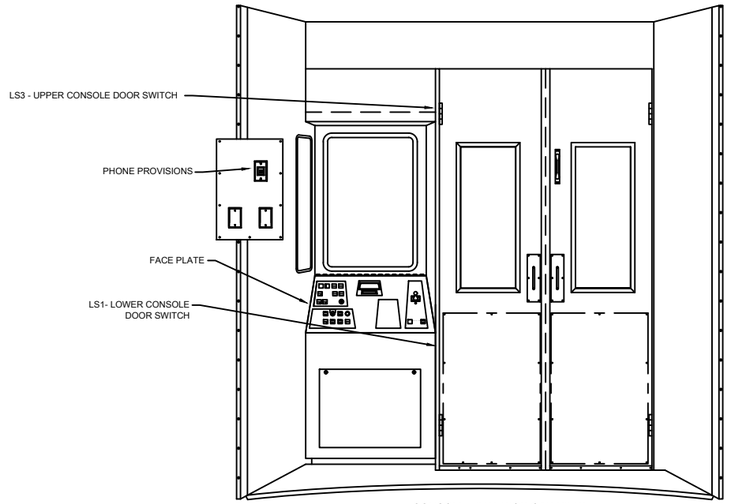

CONSOLE - INTERIOR CAB VIEW

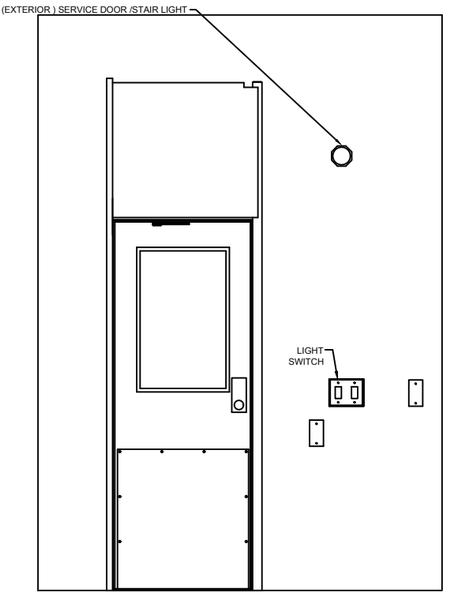

SERVICE DOOR - INTERIOR CAB VIEW

FOR REFERENCE ONLY

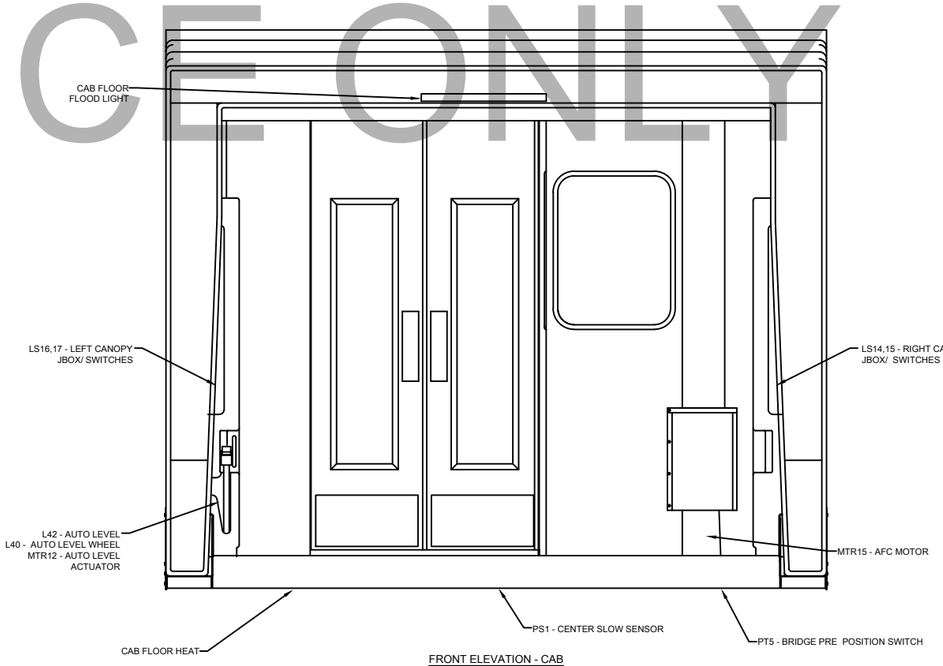

FRONT ELEVATION - CAB

NOTES:

1. E-STOP BUTTON MOUNTED ON OUTSIDE OF STAIRS, FACING UNDERNEATH PBB.
2. FOR LEFT SIDE VIEW OF WHEEL BOGIE SEE EWB-1.

UNLESS OTHERWISE SPECIFIED
ANG ±1° FRACTIONAL ±1/16
2 PL ±.06 3 PL ±.030
HOLES & SLOTS ±.015
MM 0 PL ±1.5 1 PL ±.75
INTERPRET DIM AND TOL PER ASME Y14.5-2009
THIRD ANGLE PROJECTION

DRFTR	JML	DATE 02/01/2021
CHKD	AC	DATE 02/01/2021
APVD	AC	DATE 02/01/2021

THIS DOCUMENT CONTAINS INFORMATION THAT IS PROPRIETARY AND CONFIDENTIAL TO JOHN BEAN TECHNOLOGIES CORPORATION AND ITS AFFILIATES, AND MAY NOT BE PUBLICLY DISCLOSED WITHOUT THE EXPRESS WRITTEN PERMISSION OF JOHN BEAN TECHNOLOGIES CORPORATION. UNDER ANY U.S. GOVERNMENT PRIME CONTRACT THIS INFORMATION SHALL BE CONSIDERED TO BE "LIMITED RIGHTS DATA".
© 2021 JBT

Jetway® Systems
Ogden, UT, U.S.A.

TITLE
ELECTRICAL SUBMITTAL PBB
APRON DRIVE ERIE
INTERNATIONAL AIRPORT

SIZE	CAGE CODE	DWG NO.	PROJECT	REV
D	54077	EGA-1	FAZ-ERI_E	A

SCALE: NONE WEIGHT: LB: KG:

AUTOCAD

NOTES:

1. ALL J-BOXES, CONDUIT & WIRING TO BE SUPPLIED & MOUNTED ON TERMINAL BUILDING WALL BY CUSTOMER.
2. J-BOX 1,2 & 3 TO BE A MIN. OF 16"X16"X4" & WEATHERPROOF.
3. J-BOX 4 TO BE A MIN. OF 8"X8"X4" & WEATHERPROOF.

REVISIONS HISTORY

SHT	ZONE	REV	DESCRIPTION	BY	DATE	APPROVED
--	---	A	SUBMITTAL	----	02-01-21	JML

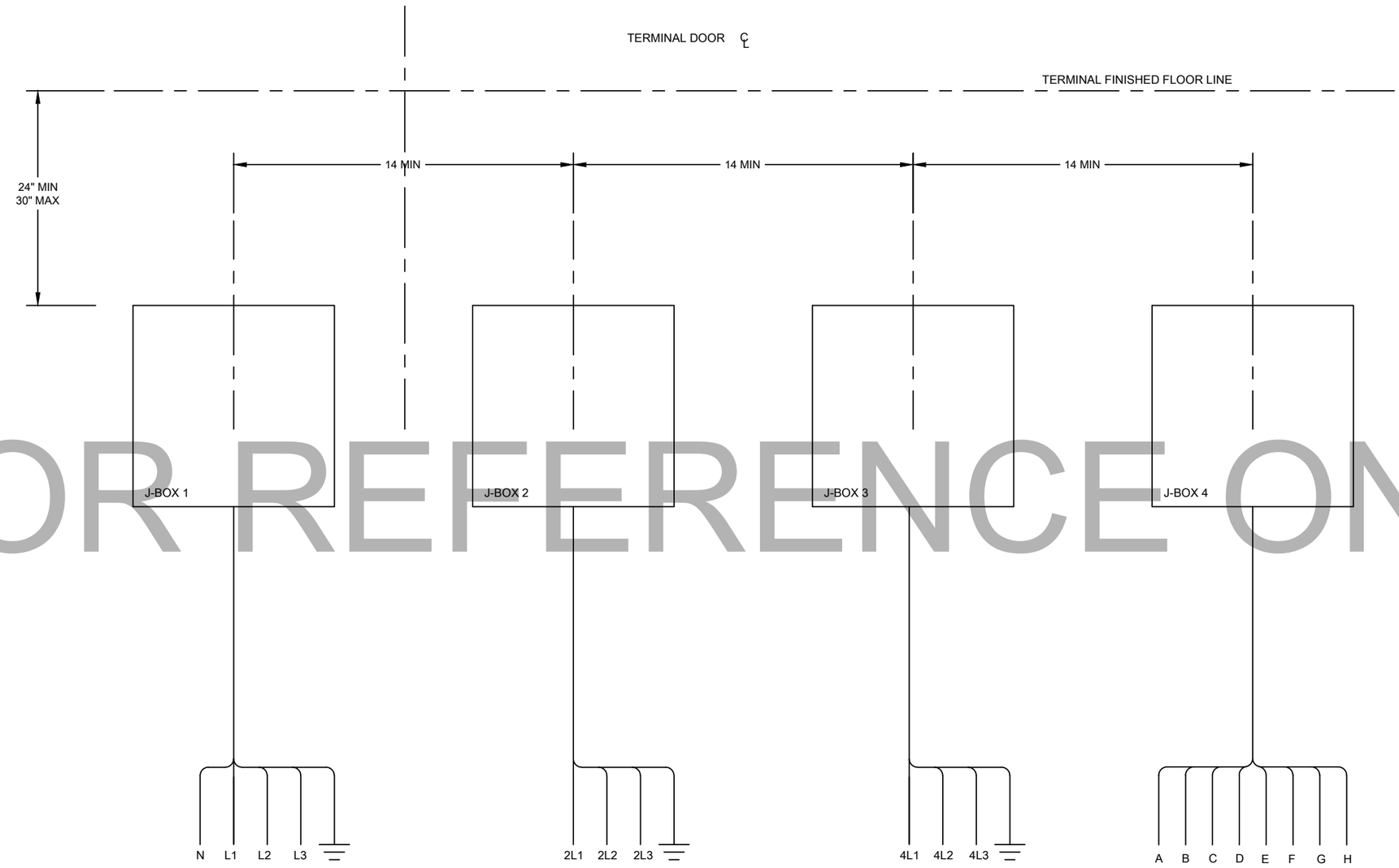

FOR REFERENCE ONLY

UNLESS OTHERWISE SPECIFIED
ANG ±1° FRACTIONAL ±1/16
2 PL ±.06 3 PL ±.030
HOLES & SLOTS ±.015
MM 0 PL ±1.5 1 PL ±.75
INTERPRET DIM AND TOL PER
ASME Y14.5-2009

THIRD ANGLE PROJECTION

DRFTR	JML	02/01/2021
CHKD	AC	02/01/2021
APVD	AC	02/01/2021

THIS DOCUMENT CONTAINS INFORMATION THAT IS PROPRIETARY AND CONFIDENTIAL TO JOHN BEAN TECHNOLOGIES CORPORATION AND ITS AFFILIATES, AND MAY NOT BE PUBLICLY DISCLOSED WITHOUT THE EXPRESS WRITTEN PERMISSION OF JOHN BEAN TECHNOLOGIES CORPORATION. UNDER ANY U.S. GOVERNMENT PRIME CONTRACT THIS INFORMATION SHALL BE CONSIDERED TO BE "LIMITED RIGHTS DATA".
© 2021 JBT

Jetway® Systems
Ogden, UT, U.S.A.

TITLE: ELECTRICAL SUBMITTAL PBB
APRON DRIVE ERIE
INTERNATIONAL AIRPORT

SIZE	CAGE CODE	DWG NO.	PROJECT	REV
D	54077	ECE-1	FAZ-ERI_E	A

SCALE: NONE WEIGHT: LB: KG:

AUTOCAD

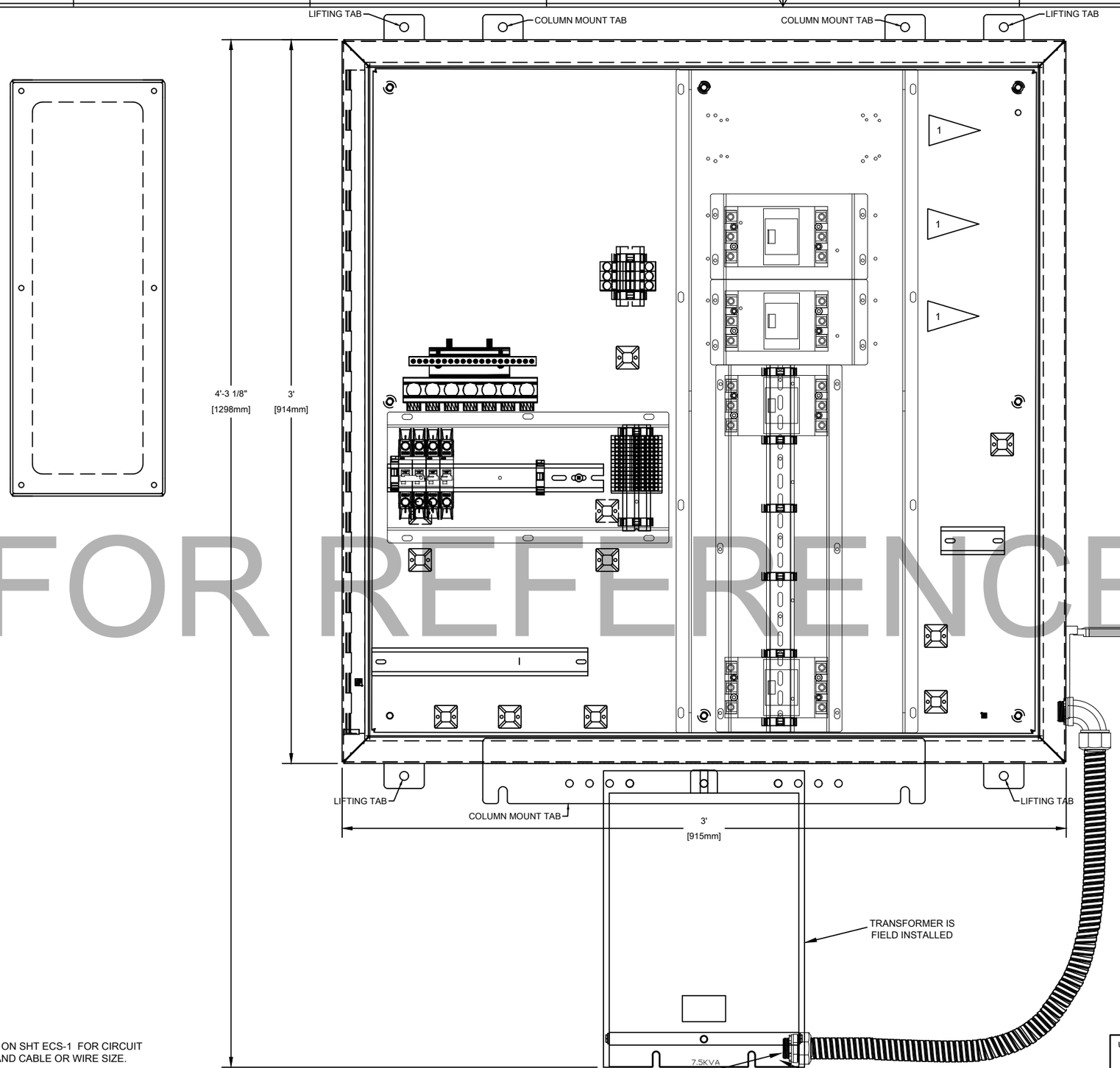

DISCONNECT PANEL ASSEMBLY
SHOWN WITH DEAD FRONT AND DOOR REMOVED

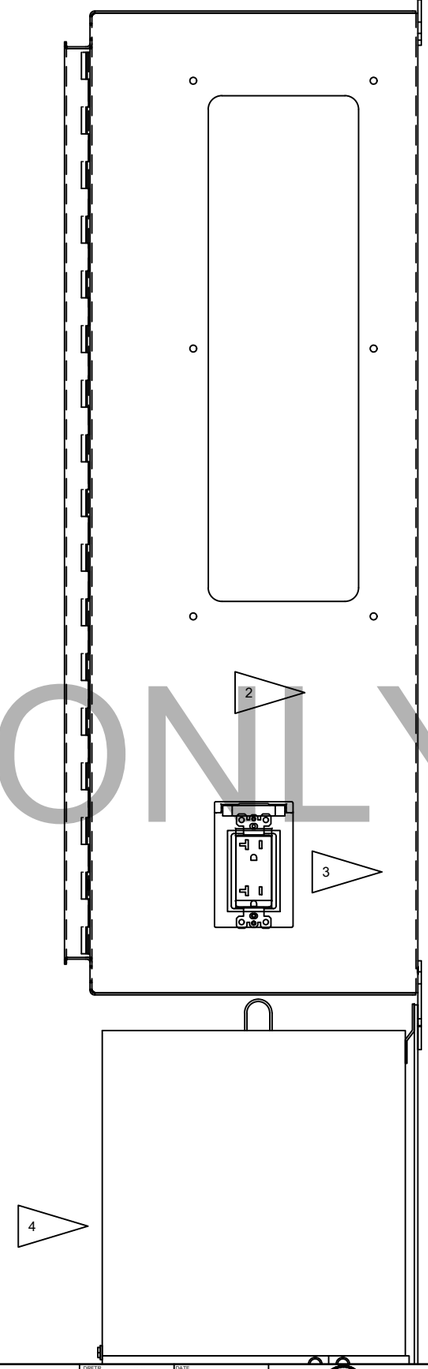

FOR REFERENCE ONLY

NOTES:

1. SEE TABLE ON SHT ECS-1 FOR CIRCUIT BREAKER AND CABLE OR WIRE SIZE.
2. E-STOP MOUNTED EXTERNALLY ON DISCONNECT PANEL.
3. 120V 20A RECEPTACLE

UNLESS OTHERWISE SPECIFIED
ANG ±1° FRACTIONAL ±1/16
2 PL ±.06 3 PL ±.030
HOLES & SLOTS ±.015
MM 0 PL ±1.5 1 PL ±.75
INTERPRET DIM AND TOL PER
ASME Y14.5-2009
THIRD ANGLE PROJECTION

DRFTR	JML	DATE 02/01/2021
CHKD	AC	DATE 02/01/2021
APVD	AC	DATE 02/01/2021

THIS DOCUMENT CONTAINS INFORMATION THAT IS PROPRIETARY AND CONFIDENTIAL TO JOHN BEAN TECHNOLOGIES CORPORATION AND ITS AFFILIATES, AND MAY NOT BE PUBLICLY DISCLOSED WITHOUT THE EXPRESS WRITTEN PERMISSION OF JOHN BEAN TECHNOLOGIES CORPORATION. UNDER ANY U.S. GOVERNMENT PRIME CONTRACT THIS INFORMATION SHALL BE CONSIDERED TO BE "LIMITED RIGHTS DATA".
© 2021 JBT

Jetway® Systems
Ogden, UT, U.S.A.

TITLE
ELECTRICAL SUBMITTAL PBB
APRON DRIVE ERIE
INTERNATIONAL AIRPORT

SIZE	CAGE CODE	DWG NO.	PROJECT	REV
D	54077	EDP-1	FAZ-ERI_E	A

SCALE: NONE WEIGHT: LB: KG:

AUTOCAD

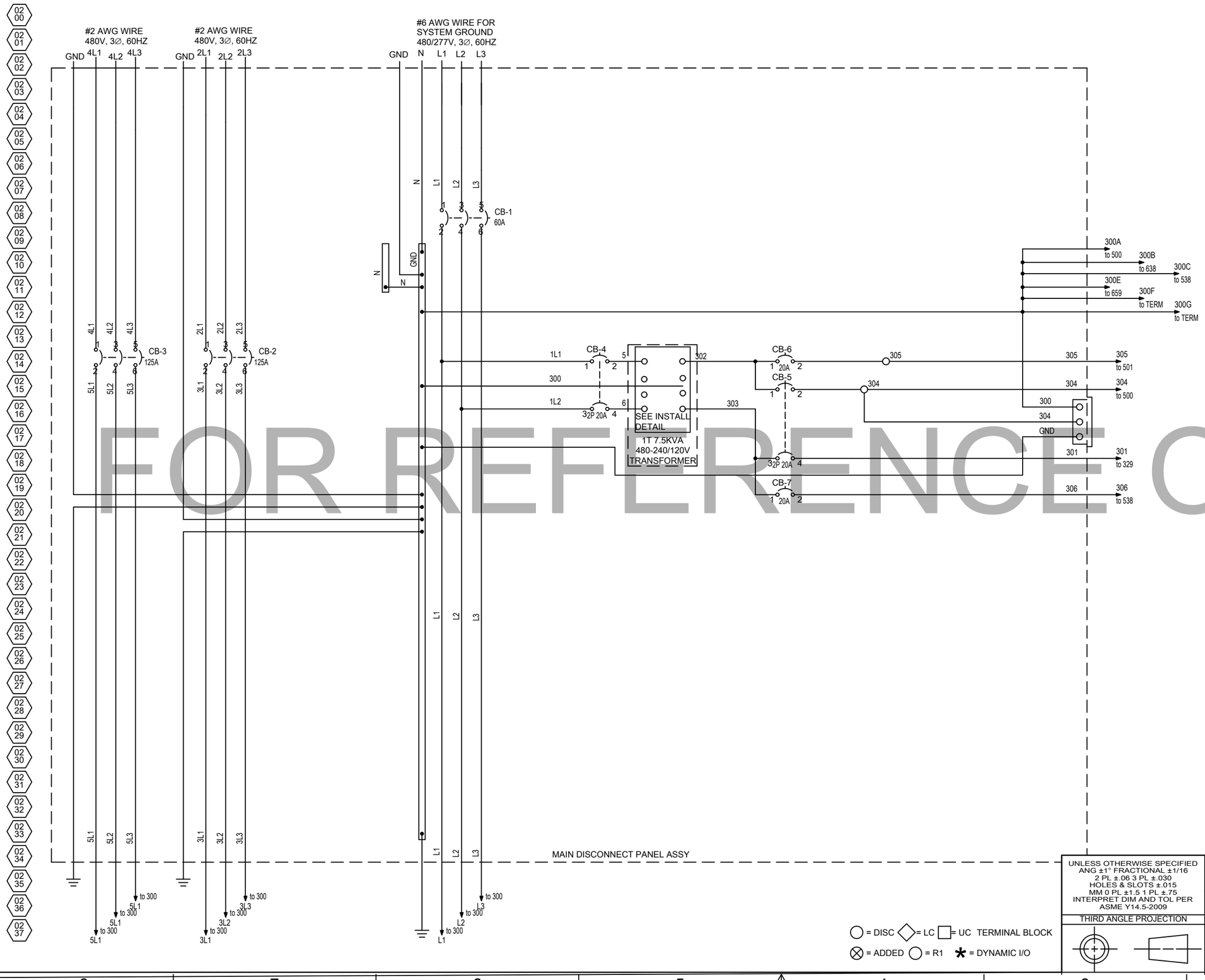

TRANSFORMER INSTALL			
WIRE #	SIZE	COLOR	VOLT
5	10G	BLK	480V
6	10G	BLK	480V
300	10G	WHT	N/ GND
302	8G	RED	120/240V
303	8G	RED	120/240V

SOLA / HD

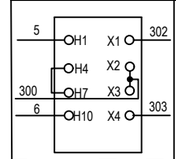

SQD

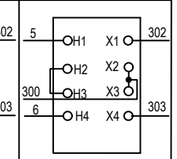

FOR REFERENCE ONLY

= DISC = LC = UC TERMINAL BLOCK
= ADDED = R1 = DYNAMIC I/O

UNLESS OTHERWISE SPECIFIED
ANG ±1° FRACTIONAL ±1/16
2 PL ±.06 3 PL ±.030
HOLES & SLOTS ±.015
MM 0 PL ±1.5 1 PL ±.75
INTERPRET DIM AND TOL PER
ASME Y14.5-2009
THIRD ANGLE PROJECTION

DRFTR	JML	DATE 02/01/2021
CHKD	AC	DATE 02/01/2021
APVD	AC	DATE 02/01/2021

THIS DOCUMENT CONTAINS INFORMATION THAT IS PROPRIETARY AND CONFIDENTIAL TO JOHN BEAN TECHNOLOGIES CORPORATION AND ITS AFFILIATES, AND MAY NOT BE PUBLICLY DISCLOSED WITHOUT THE EXPRESS WRITTEN PERMISSION OF JOHN BEAN TECHNOLOGIES CORPORATION. UNDER ANY U.S. GOVERNMENT PRIME CONTRACT THIS INFORMATION SHALL BE CONSIDERED TO BE "LIMITED RIGHTS DATA".
© 2021 JBT

Jetway® Systems
Ogden, UT, U.S.A.

TITLE: ELECTRICAL SUBMITTAL PBB
APRON DRIVE ERIE
INTERNATIONAL AIRPORT

SIZE	CAGE CODE	DWG NO.	PROJECT	REV
D	54077	EDP-2	FAZ-ERI_E	A

SCALE: NONE WEIGHT: LB: KG:

AUTOCAD

J-BOX R-1

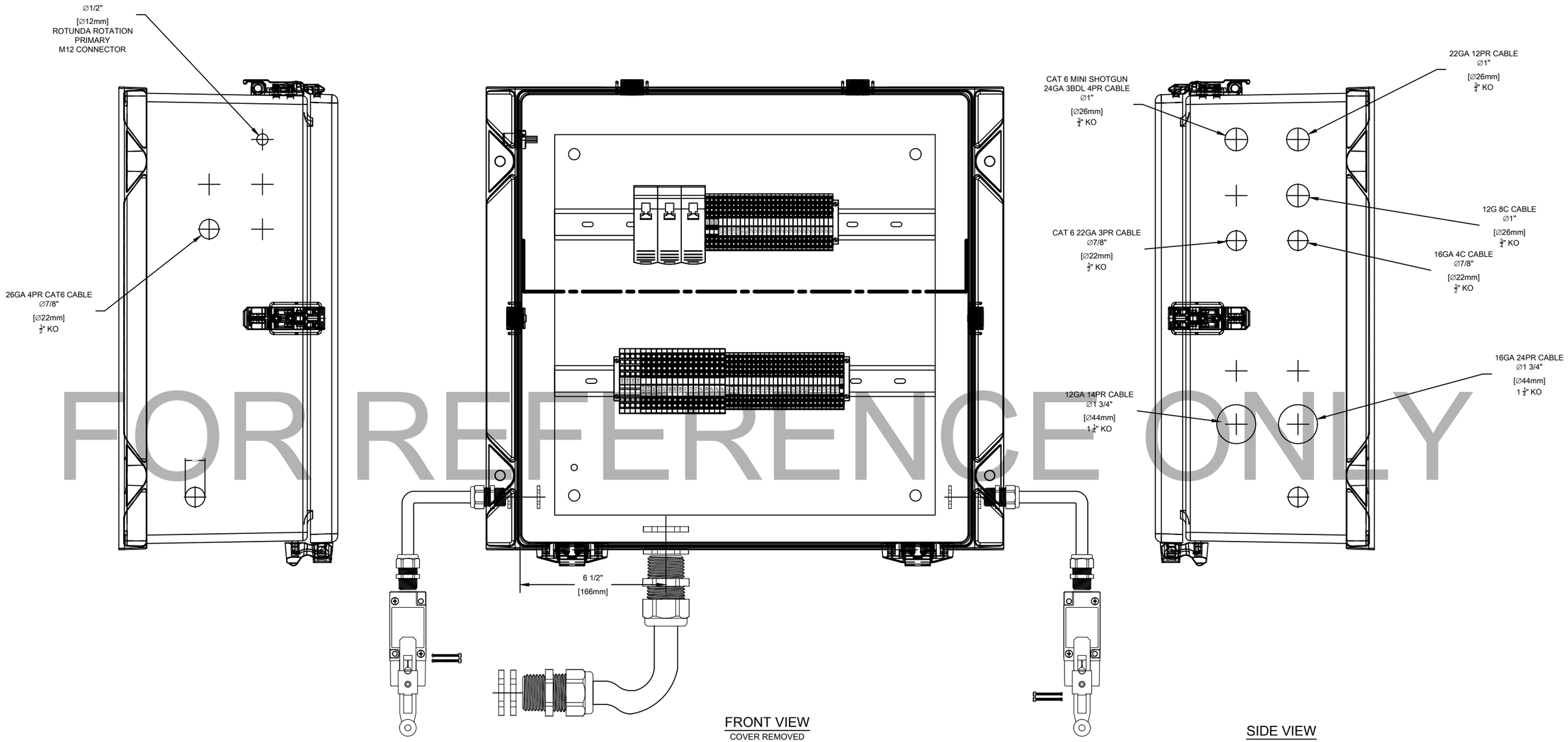

FRONT VIEW
COVER REMOVED

SIDE VIEW

FOR REFERENCE ONLY

UNLESS OTHERWISE SPECIFIED
ANG ±1° FRACTIONAL ±1/16
2 PL ±.06 3 PL ±.030
HOLES & SLOTS ±.015
MM 0 PL ±1.5 1 PL ±.75
INTERPRET DIM AND TOL PER
ASME Y14.5-2009

THIRD ANGLE PROJECTION

DRFTR	JML	DATE 02/01/2021
CHKD	AC	DATE 02/01/2021
APVD	AC	DATE 02/01/2021

THIS DOCUMENT CONTAINS INFORMATION THAT IS PROPRIETARY AND CONFIDENTIAL TO JOHN BEAN TECHNOLOGIES CORPORATION AND ITS AFFILIATES, AND MAY NOT BE PUBLICLY DISCLOSED WITHOUT THE EXPRESS WRITTEN PERMISSION OF JOHN BEAN TECHNOLOGIES CORPORATION. UNDER ANY U.S. GOVERNMENT PRIME CONTRACT THIS INFORMATION SHALL BE CONSIDERED TO BE "LIMITED RIGHTS DATA".
© 2021 JBT

Jetway® Systems
Ogden, UT, U.S.A.

TITLE: ELECTRICAL SUBMITTAL PBB
APRON DRIVE ERIE
INTERNATIONAL AIRPORT

SIZE	CAGE CODE	DWG NO.	PROJECT	REV
D	54077	ER1-1	FAZ-ERI_E	A

SCALE: NONE
WEIGHT: LB: KG:

AUTOCAD

FOR REFERENCE ONLY

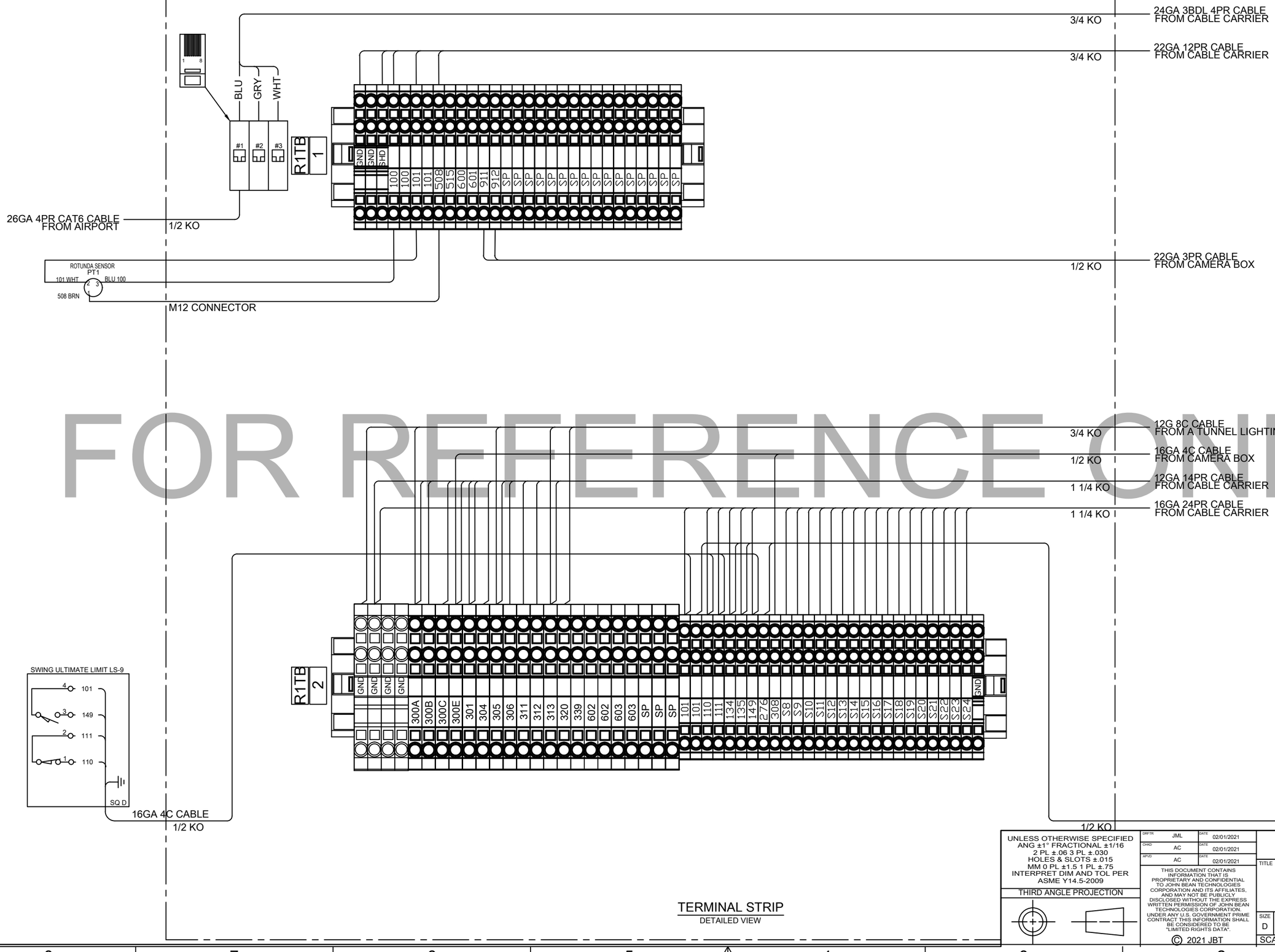

TERMINAL STRIP
DETAILED VIEW

UNLESS OTHERWISE SPECIFIED
ANG ±1° FRACTIONAL ±1/16
2 PL ±.06 3 PL ±.030
HOLES & SLOTS ±.015
MM 0 PL ±1.5 1 PL ±.75
INTERPRET DIM AND TOL PER
ASME Y14.5-2009
THIRD ANGLE PROJECTION

DRFTR	JML	DATE 02/01/2021
CHKD	AC	DATE 02/01/2021
APVD	AC	DATE 02/01/2021

THIS DOCUMENT CONTAINS INFORMATION THAT IS PROPRIETARY AND CONFIDENTIAL TO JOHN BEAN TECHNOLOGIES CORPORATION AND ITS AFFILIATES, AND MAY NOT BE PUBLICLY DISCLOSED WITHOUT THE EXPRESS WRITTEN PERMISSION OF JOHN BEAN TECHNOLOGIES CORPORATION. UNDER ANY U.S. GOVERNMENT PRIME CONTRACT THIS INFORMATION SHALL BE CONSIDERED TO BE "LIMITED RIGHTS DATA".
© 2021 JBT

Jetway® Systems
Ogden, UT, U.S.A.

TITLE
ELECTRICAL SUBMITTAL PBB
APRON DRIVE ERIE
INTERNATIONAL AIRPORT

SIZE	CAGE CODE	DWG NO.	PROJECT	REV
D	54077	ER1-2	FAZ-ERI_E	A

SCALE: NONE WEIGHT: LB: KG:

AUTOCAD

FOR REFERENCE ONLY

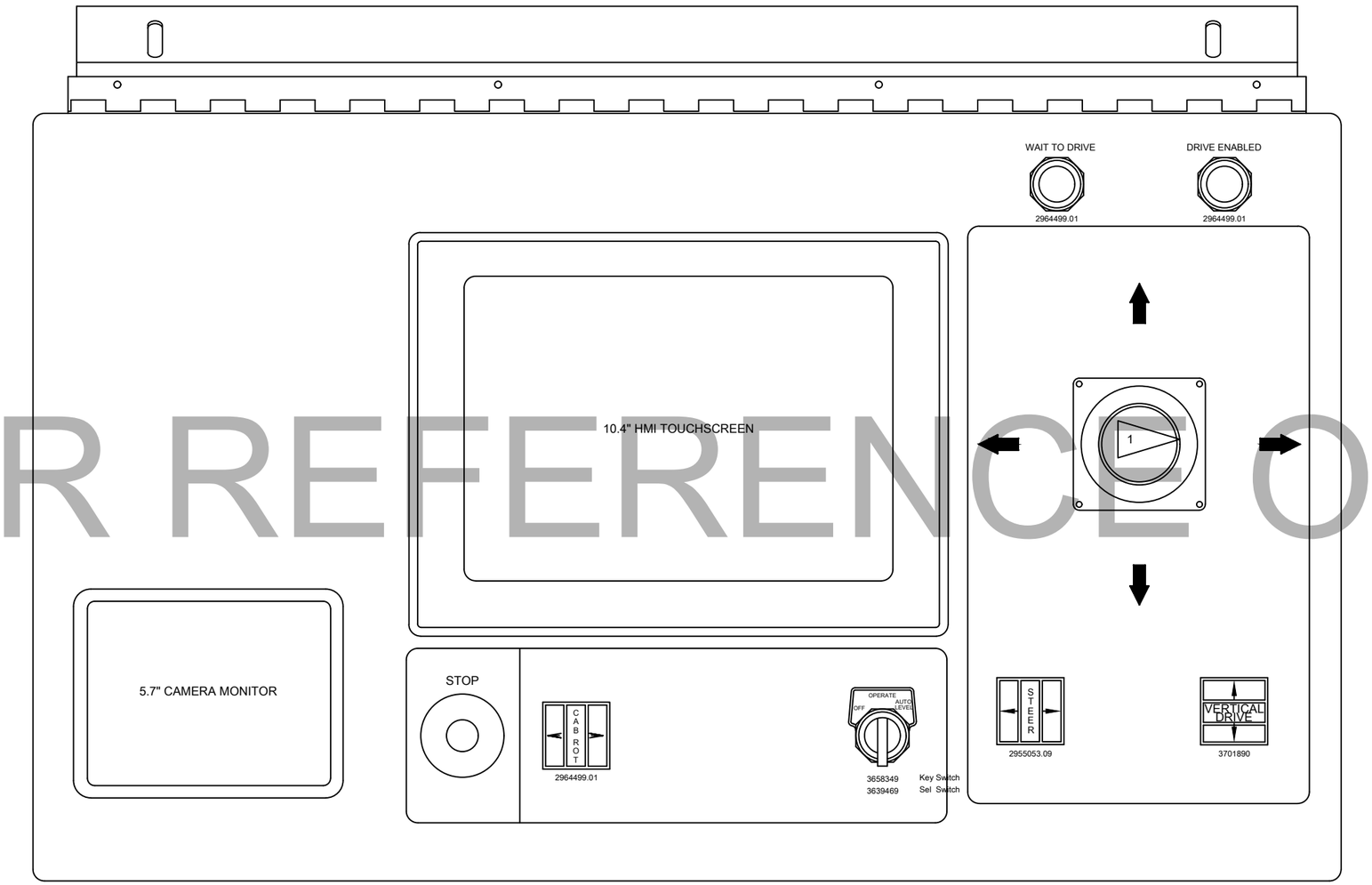

4. PUSH BUTTONS NOT SHOWN WILL BE ON HMI.

1 > 2 QUAD JOYSTICK W/ TRIGGER (DEAD MAN SWITCH).

NOTES:

UNLESS OTHERWISE SPECIFIED
ANG ±1° FRACTIONAL ±1/16
2 PL ±.06 3 PL ±.030
HOLES & SLOTS ±.015
MM 0 PL ±1.5 1 PL ±.75
INTERPRET DIM AND TOL PER
ASME Y14.5-2009
THIRD ANGLE PROJECTION

DRFTR	JML	DATE 02/01/2021
CHKD	AC	DATE 02/01/2021
APVD	AC	DATE 02/01/2021

THIS DOCUMENT CONTAINS INFORMATION THAT IS PROPRIETARY AND CONFIDENTIAL TO JOHN BEAN TECHNOLOGIES CORPORATION AND ITS AFFILIATES, AND MAY NOT BE PUBLICLY DISCLOSED WITHOUT THE EXPRESS WRITTEN PERMISSION OF JOHN BEAN TECHNOLOGIES CORPORATION. UNDER ANY U.S. GOVERNMENT PRIME CONTRACT THIS INFORMATION SHALL BE CONSIDERED TO BE "LIMITED RIGHTS DATA".
© 2021 JBT

Jetway® Systems
Ogden, UT, U.S.A.

TITLE: ELECTRICAL SUBMITTAL PBB APRON DRIVE ERIE INTERNATIONAL AIRPORT

SIZE	CAGE CODE	DWG NO.	PROJECT	REV
D	54077	EFP-1	FAZ-ERI_E	A

SCALE: NONE WEIGHT: LB: KG:

AUTOCAD

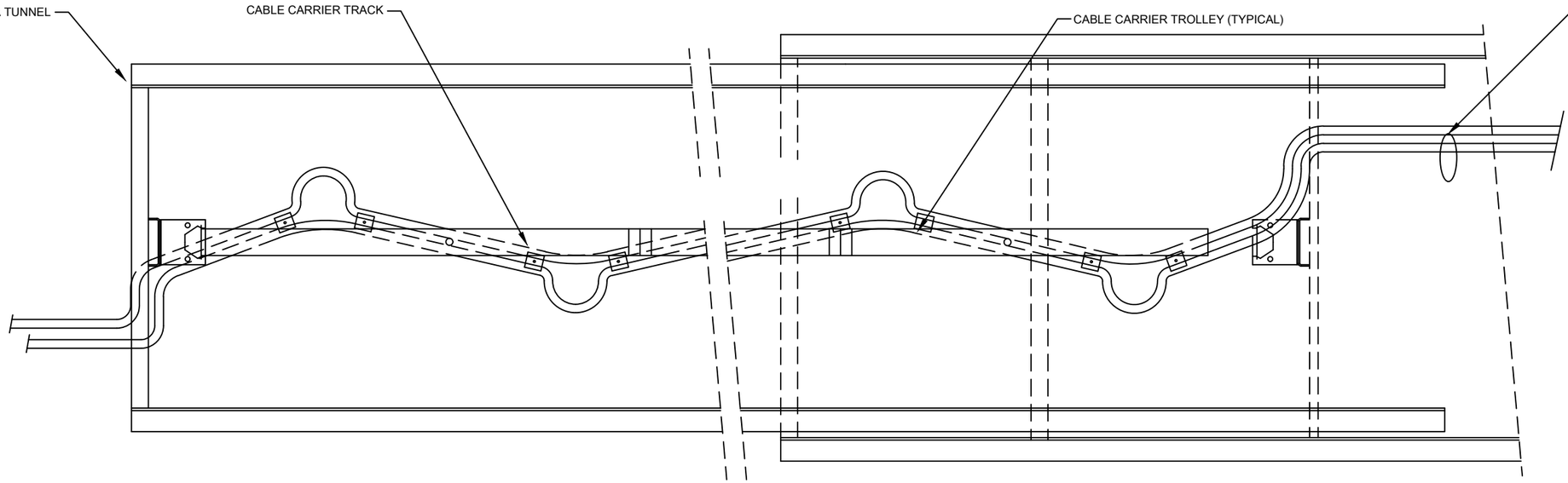

CABLE CARRIER SYSTEM

UNDERSIDE OF PASSENGER BOARDING BRIDGE

FOR REFERENCE ONLY

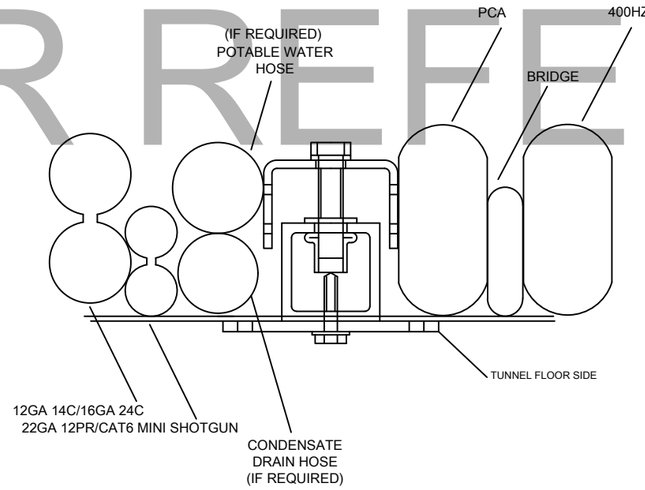

CROSS SECTION FROM CABLE CARRIER ASSEMBLY

TUNNEL A

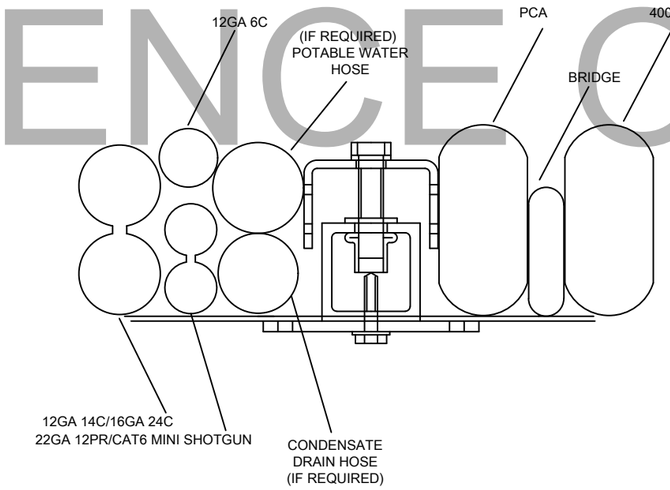

CROSS SECTION FROM CABLE CARRIER ASSEMBLY

TUNNEL B

NOTES:

1. TYPICAL LAYOUT OF CABLE CARRIER SYSTEM. SPECIFIC CABLE SIZES FOUND ON SHT 1 IN GATE EQUIPMENT CONFIGURATION TABLE.

CROSS SECTION FROM CABLE CARRIER ASSEMBLY

UNDERSIDE OF PASSENGER BOARDING BRIDGE

UNLESS OTHERWISE SPECIFIED
ANG ±1° FRACTIONAL ±1/16
2 PL ±.06 3 PL ±.030
HOLES & SLOTS ±.015
MM 0 PL ±1.5 1 PL ±.75
INTERPRET DIM AND TOL PER
ASME Y14.5-2009

THIRD ANGLE PROJECTION

DRFTR	JML	DATE 02/01/2021
CHKD	AC	DATE 02/01/2021
APVD	AC	DATE 02/01/2021

THIS DOCUMENT CONTAINS INFORMATION THAT IS PROPRIETARY AND CONFIDENTIAL TO JOHN BEAN TECHNOLOGIES CORPORATION AND ITS AFFILIATES, AND MAY NOT BE PUBLICLY DISCLOSED WITHOUT THE EXPRESS WRITTEN PERMISSION OF JOHN BEAN TECHNOLOGIES CORPORATION. UNDER ANY U.S. GOVERNMENT PRIME CONTRACT THIS INFORMATION SHALL BE CONSIDERED TO BE "LIMITED RIGHTS DATA".
© 2021 JBT

Jetway® Systems
Ogden, UT, U.S.A.

TITLE: ELECTRICAL SUBMITTAL PBB
APRON DRIVE ERIE
INTERNATIONAL AIRPORT

SIZE	CAGE CODE	DWG NO.	PROJECT	REV
D	54077	ECC-1	FAZ-ERI_E	A

SCALE: NONE WEIGHT: LB: KG:

AUTOCAD

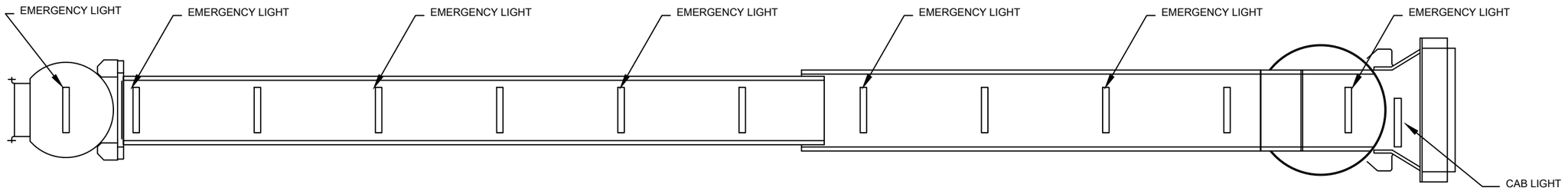

AT2 FLAT ROOF
61/95

FOR REFERENCE ONLY

3 CAB LIGHT 7" x 4' SURFACE MOUNT WATERPROOF FIXTURE.

2 EMERGENCY LIGHTS TO BE EQUIPPED WITH BATTERY PACKS

1 ALL LIGHTING TO BE 24V LOW PROFILE LIGHTS.

NOTES:

UNLESS OTHERWISE SPECIFIED
ANG ±1° FRACTIONAL ±1/16
2 PL ±.06 3 PL ±.030
HOLES & SLOTS ±.015
MM 0 PL ±1.5 1 PL ±.75
INTERPRET DIM AND TOL PER
ASME Y14.5-2009

THIRD ANGLE PROJECTION

DRFTR	JML	DATE 02/01/2021
CHKD	AC	DATE 02/01/2021
APVD	AC	DATE 02/01/2021

THIS DOCUMENT CONTAINS INFORMATION THAT IS PROPRIETARY AND CONFIDENTIAL TO JOHN BEAN TECHNOLOGIES CORPORATION AND ITS AFFILIATES, AND MAY NOT BE PUBLICLY DISCLOSED WITHOUT THE EXPRESS WRITTEN PERMISSION OF JOHN BEAN TECHNOLOGIES CORPORATION. UNDER ANY U.S. GOVERNMENT PRIME CONTRACT THIS INFORMATION SHALL BE CONSIDERED TO BE "LIMITED RIGHTS DATA".
© 2021 JBT

Jetway® Systems
Ogden, UT, U.S.A.

TITLE
ELECTRICAL SUBMITTAL PBB
APRON DRIVE ERIE
INTERNATIONAL AIRPORT

SIZE	CAGE CODE	DWG NO.	PROJECT	REV
D	54077	LPLTG-7	FAZ-ERI_E	A

SCALE: NONE WEIGHT: LB: KG:

AUTOCAD

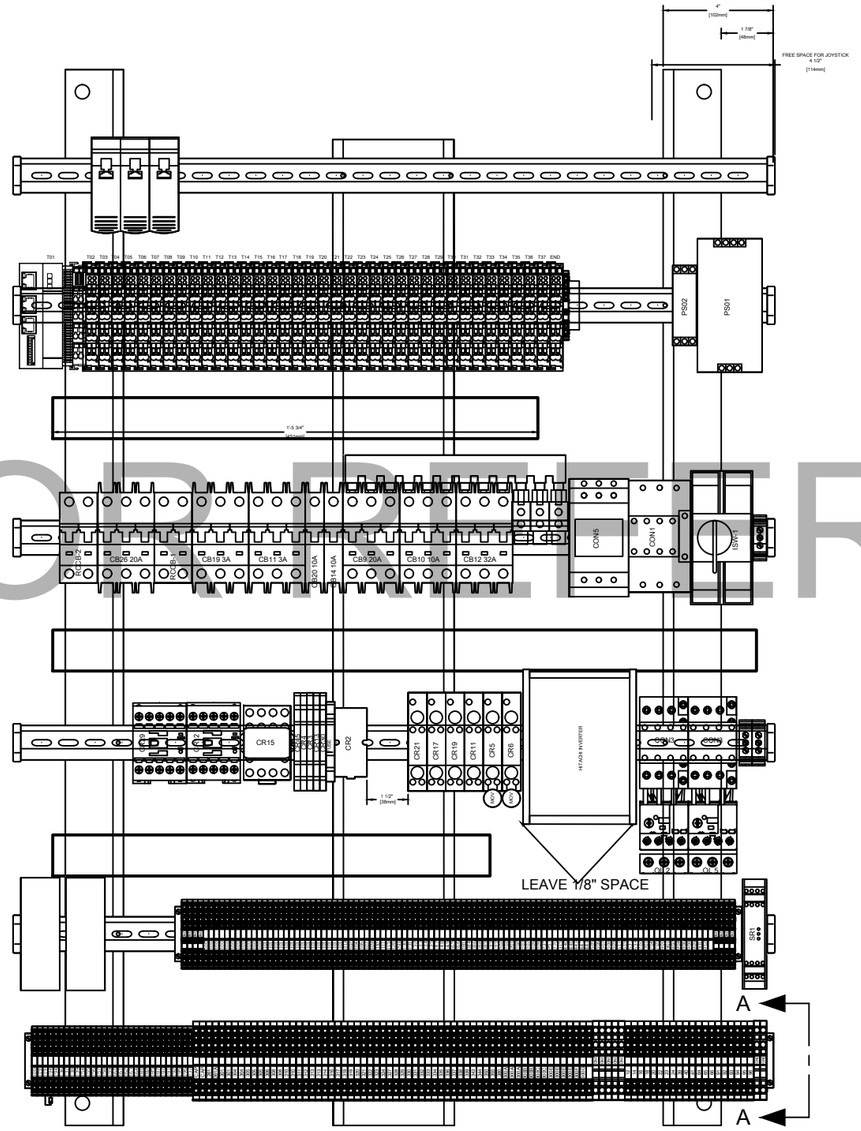

RESISTOR FOR CAB MOTOR INVERTER

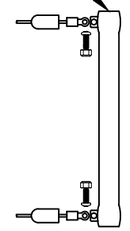

BYPASS PB

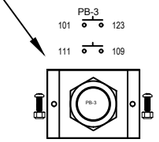

CONSOLE FAN

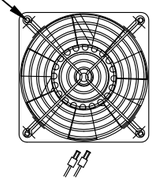

CONSOLE DOOR SWITCH

AUDIBLE WARNING DEVICE

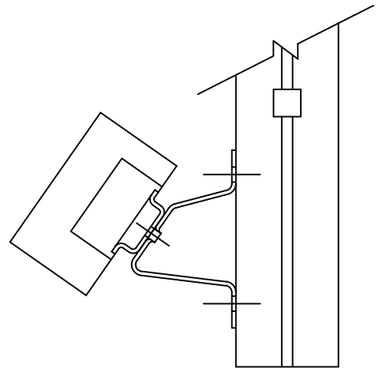

VIEW A-A

FOR REFERENCE ONLY

UNLESS OTHERWISE SPECIFIED
ANG ±1° FRACTIONAL ±1/16
2 PL ±.06 3 PL ±.030
HOLES & SLOTS ±.015
MM 0 PL ±1.5 1 PL ±.75
INTERPRET DIM AND TOL PER
ASME Y14.5-2009

THIRD ANGLE PROJECTION

DRFTR	JML	DATE 02/01/2021
CHKD	AC	DATE 02/01/2021
APVD	AC	DATE 02/01/2021

THIS DOCUMENT CONTAINS INFORMATION THAT IS PROPRIETARY AND CONFIDENTIAL TO JOHN BEAN TECHNOLOGIES CORPORATION AND ITS AFFILIATES, AND MAY NOT BE PUBLICLY DISCLOSED WITHOUT THE EXPRESS WRITTEN PERMISSION OF JOHN BEAN TECHNOLOGIES CORPORATION. UNDER ANY U.S. GOVERNMENT PRIME CONTRACT THIS INFORMATION SHALL BE CONSIDERED TO BE "LIMITED RIGHTS DATA".
© 2021 JBT

Jetway® Systems
Ogden, UT, U.S.A.

TITLE
ELECTRICAL SUBMITTAL PBB
APRON DRIVE ERIE
INTERNATIONAL AIRPORT

SIZE	CAGE CODE	DWG NO.	PROJECT	REV
D	54077	ECL-1	FAZ-ERI_E	A

SCALE: NONE WEIGHT: LB: KG:

AUTOCAD

JBT OPTION SELECTION SCREEN #1

1. JOYSTICK TRIGGER OPTION	☑	6. CARD READER OPTION	☐	11. KEY SWITCH OPTION	☑	16.BAGGAGE LIFT OPTION	☐		
2. LOWER DRIVE LEFT ESTOP	☑	7. SAFETY SHOE OPTION	☐	12. SECONDARY AUTOLEVEL WHEEL	☐	17.CAB FLOOR FLOODLIGHT	☑	22. SAFEGATE OPTION	CHECK JOB ORDER
3. LOWER DRIVE RIGHT ESTOP	☐	8. PUSHBUTTON BRIDGE MAIN SCREEN	☐	13. WING ROOT OPTION	☐				
4. SERVICE STAIR ESTOP	☑	9. SMOKE DETECTOR OPTION	☐	14. SMOKE DETECTOR SHARED AIR-SPACE OPT.	CHECK JOB ORDER	19.EXTEND LASER SENSOR OPTION	☐	24. ENABLE SAFEDOCK PRE2019 HANDSHAKING	☐
5. WHEEL BUMPER OPTION	☐	10. SETUP MODE DYNAMIC I/O	CHECK JOB ORDER	15. BATERY BACKUP OPTION	☑	20. HYDRAULIC OPTION	☐	25. VDGS OFFSET OPTION	CHECK JOB ORDER

NO CHANGE TO TYPE OF VDGS	☑
VDGSTYPE0: NO VDGS CONNECTED	
VDGSTYPE1: DRY CONTACTS ONLY	
VDGSTYPE2: SAFEGATE SAFEDOCK	
VDGSTYPE3: FMT APIS	

CHECK JOB ORDER FOR SELECTION

NO CHANGE TO DRIVE MODE	☑
DRIVEMODE0: MANUAL ONLY	☑
DRIVEMODE1: LEGACY PREPOS	
DRIVEMODE2: MULTI-PARK PREPOS	
DRIVEMODE3: JETDOCK PH1 ONLY	
DRIVEMODE4: JETDOCK PH1+ PH 2	

JBT OPTION SELECTION SCREEN #3

COLLISION AVOIDANCE	☐			36.THREE BRIDGE COLLISION OPTION	☐	41. COLLISION REMOTE PLC OPTION	☐		
				37. ULTRASONIC HEIGHT OPTION CROSSTUBE	☐	42. ULTRASONIC HEIGHT OPTION	☐		
				38. STABILIZER OPTION	☐	43. ALLOW OFFSET FOR ROTUNDA ZERO	CHECK JOB ORDER		
				39. AUTO STABILIZER OPTION	☐	44. JBT BRIDGE AIR OPTION	☑		
				40. SECONDARY COLLISION OPTION	☐	45. SIMPLE BRIDGE AIR OPTION	☑		

OPTION SELECTION SCREEN #1

28V GPU INTERLOCK OPTION	☑	CAB/ HOIST 1 OPTION	☑	CENTER SPACER LIMIT OPTION	☐	SLOWDOWN PHOTO SENSOR OPTION	☑	ENGINE SENSOR OPTION	☐
400HZ INTERLOCK OPTION	☑	TUNNEL/ HOIST 2 OPTION	☑	LEFT SPACER LIMIT OPTION	☐	LEFT IR SLOWDOWN OPTION	☐	DISABLE OPERATOR LOGIN	CHECK JOB ORDER
PCAIR INTERLOCK OPTION	☑	CONSOLE LIGHT OPTION	☐	RIGHT SPACER LIMIT OPTION	☐	RIGHT IR SLOWDOWN OPTION	☐	STEER PAST NINETY OPTION	CHECK JOB ORDER
AUTO LOGOFF OPTION	CHECK JOB ORDER	CAB FLOOR DEICER	☐	RIGHT SWING DOOR OPTION	☐	FORWARD CANOPY INTERLOCK	CHECK JOB ORDER	TEST NOD OPTION	CHECK JOB ORDER
		WHEEL PROTECTION TEMP DISABLE	☐	LEFT SWING DOOR OPTION	☐	REVERSE CANOPY INTERLOCK	CHECK JOB ORDER	DISPLAY IN METERS	CHECK JOB ORDER

FOR REFERENCE ONLY

JBT OPTION SELECTION SCREEN #2

26. WINDOW HEAT	☐	31. ROLL UP DOOR OPTION	☐						
27. CAB SAFETY STRAP OPTION	☐	32. GATE SIGN OPTION	☐						
28. WIPER OPTION	☐	33.POTABLE WATER OPTION	☐						
29. CAB BUBBLE LIGHT OPTION	☐	34. HEATED BLANKETS OPTION	☑						
30. SIDE SHIFT CAB OPTION	☐	35. SCREEN SAVER OPTION	CHECK JOB ORDER						

JBT OPTION SELECTION SCREEN #4

46. PCAIR DATA OPTION	☑	51. FORCED AIR HEAT OPTION	☐	56. AMERICAN AIRLINES INDICATOR OPTION	CHECK JOB ORDER	61. RTU OFF TMR OPTION	CHECK JOB ORDER	66. CE FLOOR OPTION	☑
47. AUTO LEVEL REMOTE WARNING OPTION	☐	52. WHEELCHAIR OPTION	☐	57. DROP FLOOR OPTION	☐			67. CE FLOOR FLIP UP FLOOR OPTION	☐
48. DEADMAN SWITCH OPTION	☐	53. 400 HZ DATA OPTION	☐	58. MAIN SCREEN VERT. HT. OPTION	CHECK JOB ORDER	63. GATE BOX OPTION	☐	68. CE FLOOR STAIRSENSE OPTION	☐
49. LOAD SHED OPTION	CHECK JOB ORDER	54. KEY SWITCH REQUIRES PASSWORD OPTION	CHECK JOB ORDER	59. LIGHTNING ARM OPTION	☐	64. 400HZ CONTACTOR OPTION	☐	69. OVERSTEER OPTION	☐
50. VENTILATOR OPTION	☐	55. POWERON PB OPTION	☐	60. CAB CAL RIGHT OPTION	CHECK JOB ORDER	65. EMERG. PULLBACK OPTION	☐	70. LEGACY LASER OPTION	☑

OPTION SELECTION SCREEN #2

FRENCH	☐	SERVICE DOOR INTERLOCK OPTION	☐	BELT LOADER INTERLOCK OPTION	☐
SPANISH	☐	VFD ACTIVE HIGH OPTION	☐	MAINTAINED DOCKING ENABLE SWITCH	CHECK JOB ORDER
RUSSIAN	☐	TERMINAL DOOR INTERLOCK OPTION	☐		
		FLOOD ON W/ JSTICK OPTION	☐		

INITIAL BRIDGE SETUP PROCEDURES.

1. LOGIN USING THE JETWAY PASSWORD OF THE DAY.
2. SELECT *Maintenance,* THEN SELECT *Jetway Access.*
3. ENSURE THE CORRECT JETWAY OPTIONS ARE SELECTED, INCLUDING *Setup Mode Dynamic I/O.*
4. RETURN TO THE MAINTENANCE SCREEN AND SELECT *Options Setup*.
5. ENSURE THE CORRECT OPTIONS ARE SELECTED IN THE 4 OPTION SCREENS.
6. RETURN TO THE MAINTENANCE SCREEN AND SELECT *Diagnostic Screen*.
7. ENSURE THAT THE I/O MATCHES THE SCHEMATIC. DYNAMIC I/O WILL NEED TO BE SELECTED BY PRESSING THE BUTTON NEXT TO THE I/O POINT AND CAN BE FOUND IN THE I/O SECTION OF THE SCHEMATIC AND WILL BE MARKED WITH *.
8. RETURN TO THE MAIN SCREEN AND SELECT *Log Off*.

UNLESS OTHERWISE SPECIFIED
ANG ±1° FRACTIONAL ±1/16
2 PL ±.06 3 PL ±.030
HOLES & SLOTS ±.015
MM 0 PL ±1.5 1 PL ±.75
INTERPRET DIM AND TOL PER
ASME Y14.5-2009
THIRD ANGLE PROJECTION

DRFTR	JML	02/01/2021
CHKD	AC	02/01/2021
APVD	AC	02/01/2021

THIS DOCUMENT CONTAINS INFORMATION THAT IS PROPRIETARY AND CONFIDENTIAL TO JOHN BEAN TECHNOLOGIES CORPORATION AND ITS AFFILIATES, AND MAY NOT BE PUBLICLY DISCLOSED WITHOUT THE EXPRESS WRITTEN PERMISSION OF JOHN BEAN TECHNOLOGIES CORPORATION. UNDER ANY U.S. GOVERNMENT PRIME CONTRACT THIS INFORMATION SHALL BE CONSIDERED TO BE "LIMITED RIGHTS DATA".
© 2021 JBT

Jetway® Systems
Ogden, UT, U.S.A.

TITLE: ELECTRICAL SUBMITTAL PBB
APRON DRIVE ERIE
INTERNATIONAL AIRPORT

SIZE	CAGE CODE	DWG NO.	PROJECT	REV
D	54077	EHMI-1	FAZ-ERI_E	A

SCALE: NONE WEIGHT: LB: KG:

AUTOCAD

FOR REFERENCE ONLY

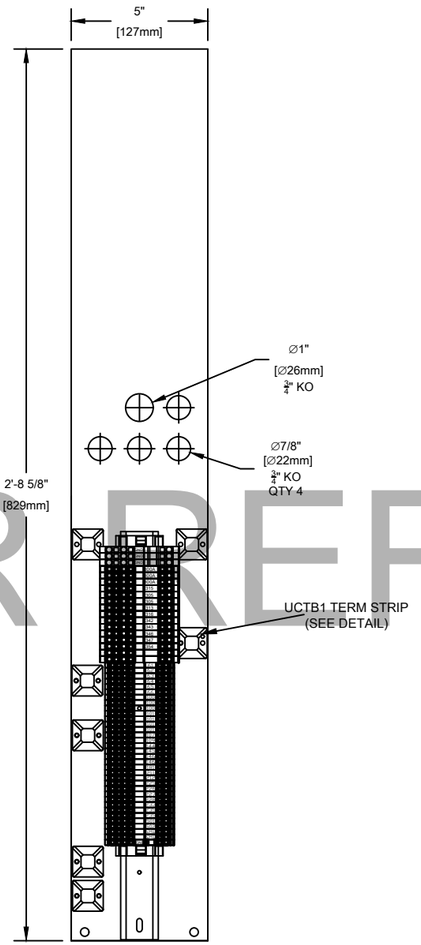

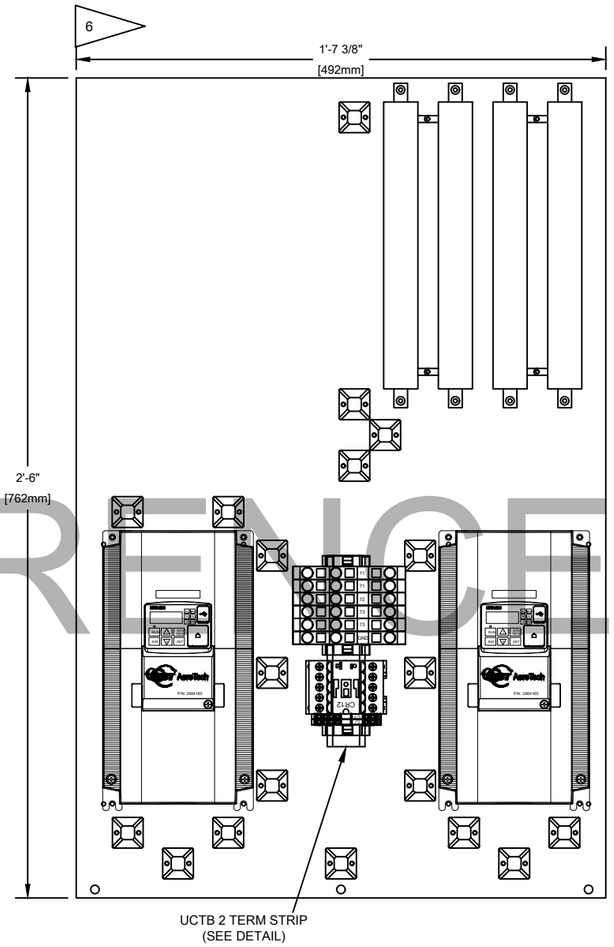

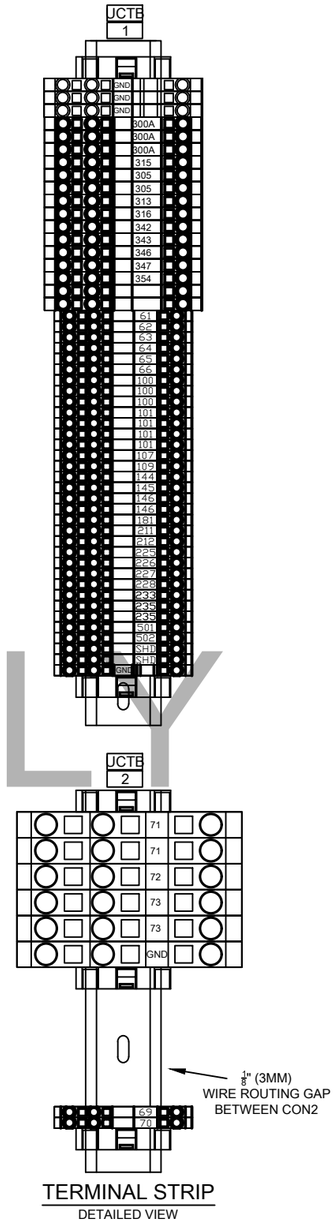

TERMINAL STRIP
DETAILED VIEW

UNLESS OTHERWISE SPECIFIED
ANG ±1° FRACTIONAL ±1/16
2 PL ±.06 3 PL ±.030
HOLES & SLOTS ±.015
MM 0 PL ±1.5 1 PL ±.75
INTERPRET DIM AND TOL PER
ASME Y14.5-2009
THIRD ANGLE PROJECTION

DRFTR	JML	DATE 02/01/2021
CHKD	AC	DATE 02/01/2021
APVD	AC	DATE 02/01/2021

THIS DOCUMENT CONTAINS INFORMATION THAT IS PROPRIETARY AND CONFIDENTIAL TO JOHN BEAN TECHNOLOGIES CORPORATION AND ITS AFFILIATES, AND MAY NOT BE PUBLICLY DISCLOSED WITHOUT THE EXPRESS WRITTEN PERMISSION OF JOHN BEAN TECHNOLOGIES CORPORATION. UNDER ANY U.S. GOVERNMENT PRIME CONTRACT THIS INFORMATION SHALL BE CONSIDERED TO BE "LIMITED RIGHTS DATA".
© 2021 JBT

Jetway® Systems
Ogden, UT, U.S.A.

TITLE
ELECTRICAL SUBMITTAL PBB
APRON DRIVE ERIE
INTERNATIONAL AIRPORT

SIZE	CAGE CODE	DWG NO.	PROJECT	REV
D	54077	EUC-1	FAZ-ERI_E	A

SCALE: NONE WEIGHT: LB: KG:

AUTOCAD

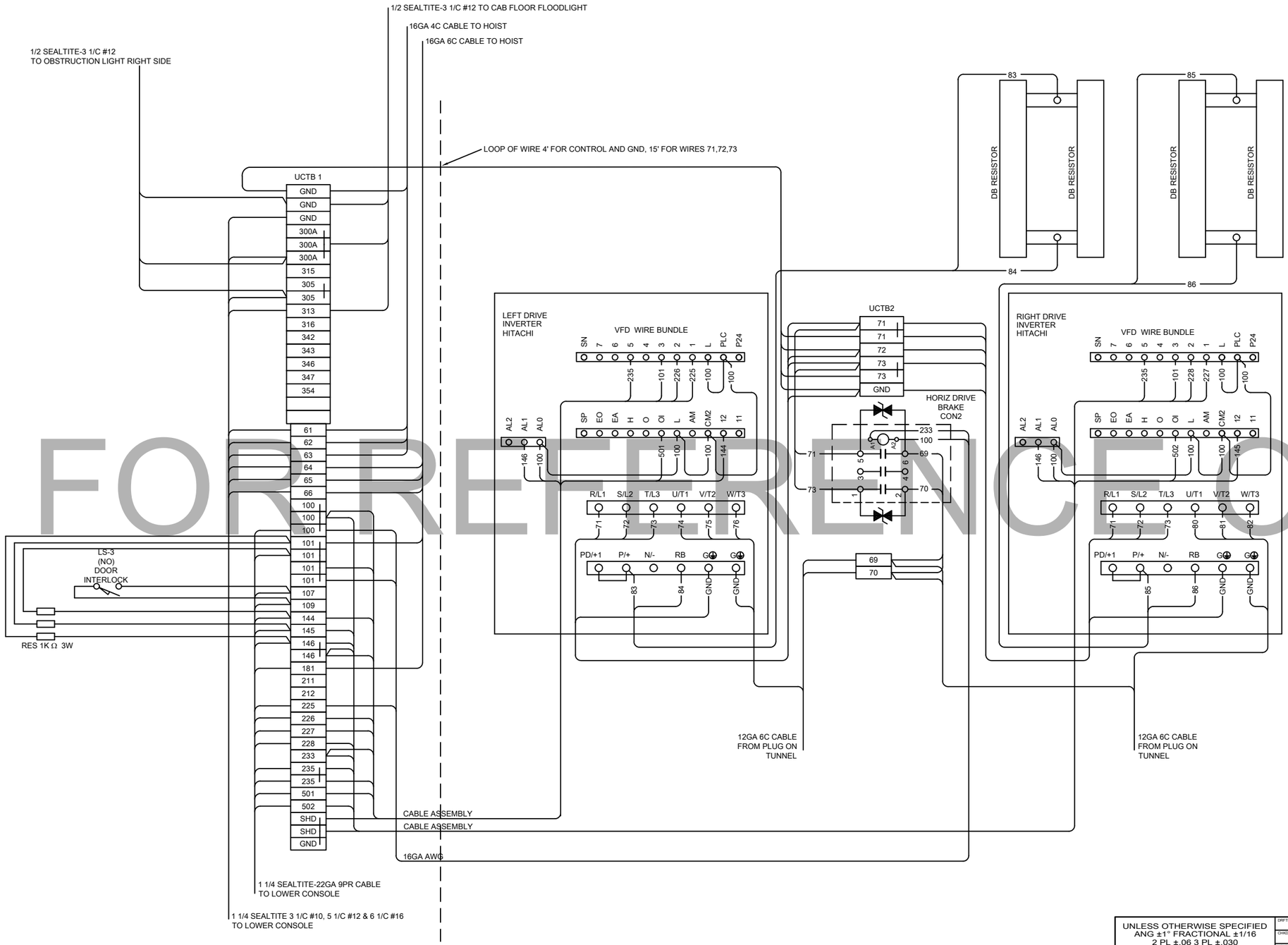

22GA 9PR CABLE - LEFT			
WIRE #		COLOR	PAIR
		BRN	
501		YEL	
225		BRN	
100		WHT	
226		BRN	
235		GRY	
144		BRN	
146		RED	
101		BRN	
		GRN	
		BRN	
		PNK	
		BLK	
		RED	
		BLK	
		GRN	
		BLK	
		WHT	

22GA 9PR CABLE - RIGHT			
WIRE #		COLOR	PAIR
		BRN	
502		YEL	
227		BRN	
100		WHT	
228		BRN	
235		GRY	
145		BRN	
146		RED	
101		BRN	
		GRN	
		BRN	
		PNK	
		BLK	
		RED	
		BLK	
		GRN	
		BLK	
		WHT	

22GA 6PR CABLE - LEFT			
WIRE #		COLOR	PAIR
		BLK	
501		YEL	
100		BLK	
101		WHT	
225		BLK	
226		BLU	
144		BLK	
146		BRN	
235		BLK	
		RED	
		BLK	
		GRN	

22GA 6PR CABLE - RIGHT			
WIRE #		COLOR	PAIR
		BLK	
502		YEL	
100		BLK	
101		WHT	
227		BLK	
228		BLU	
145		BLK	
146		BRN	
235		BLK	
		RED	
		BLK	
		GRN	

FOR REFERENCE ONLY

UNLESS OTHERWISE SPECIFIED
ANG ±1° FRACTIONAL ±1/16
2 PL ±.06 3 PL ±.030
HOLES & SLOTS ±.015
MM 0 PL ±1.5 1 PL ±.75
INTERPRET DIM AND TOL PER
ASME Y14.5-2009
THIRD ANGLE PROJECTION

DRFTR JML 02/01/2021
CHKD AC 02/01/2021
APVD AC 02/01/2021

THIS DOCUMENT CONTAINS INFORMATION THAT IS PROPRIETARY AND CONFIDENTIAL TO JOHN BEAN TECHNOLOGIES CORPORATION AND ITS AFFILIATES, AND MAY NOT BE PUBLICLY DISCLOSED WITHOUT THE EXPRESS WRITTEN PERMISSION OF JOHN BEAN TECHNOLOGIES CORPORATION. UNDER ANY U.S. GOVERNMENT PRIME CONTRACT THIS INFORMATION SHALL BE CONSIDERED TO BE "LIMITED RIGHTS DATA".
© 2021 JBT

Jetway® Systems
Ogden, UT, U.S.A.

TITLE: ELECTRICAL SUBMITTAL PBB APRON DRIVE ERIE INTERNATIONAL AIRPORT

SIZE	CAGE CODE	DWG NO.	PROJECT	REV
D	54077	EUC-2	FAZ-ERI_E	A

SCALE: NONE WEIGHT: LB: KG:

AUTOCAD

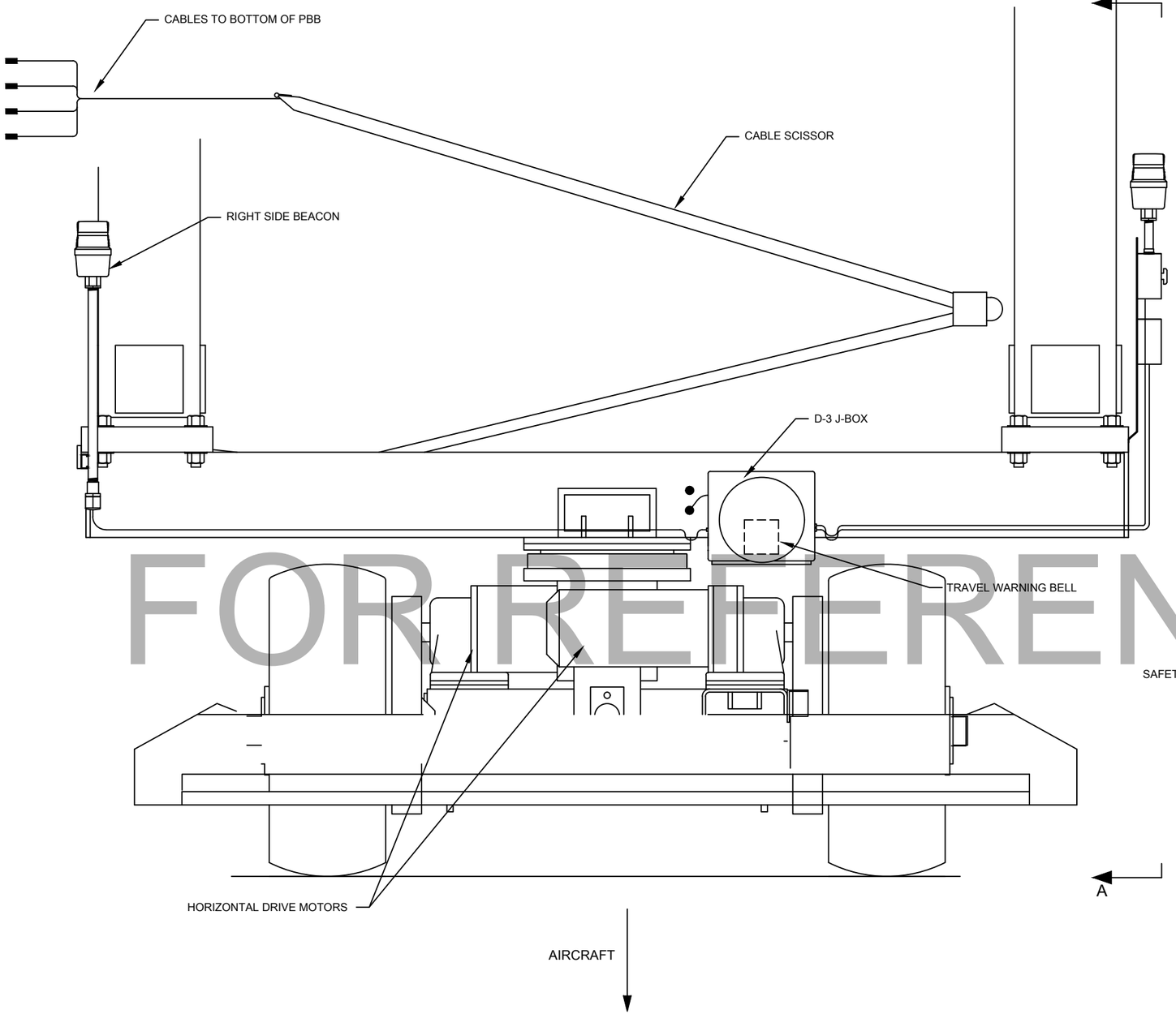

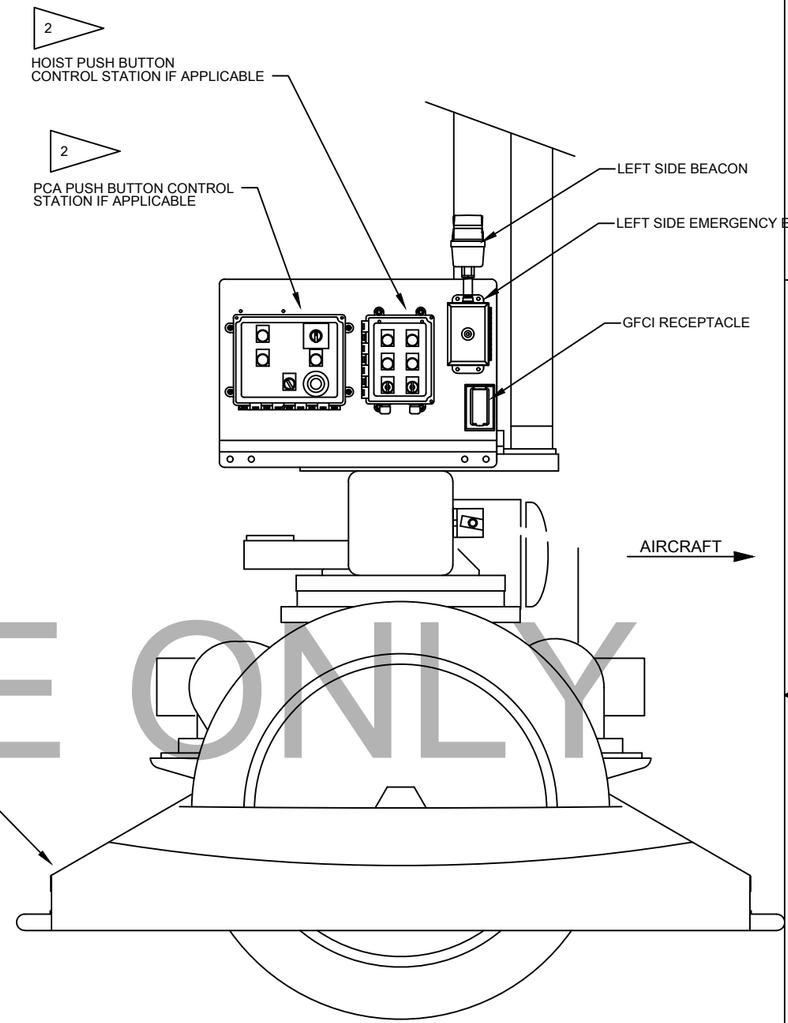

FOR REFERENCE ONLY

SECTION A-A

3. SEE SHEET EGA-1 FOR DETAILS OF THE RIGHT SIDE E-STOP.

2 PCA AND HOIST CONTROLLERS MAY CHANGE. THE CONTROLLERS ARE USED AS A REFERENCE.

1 ALL E-STOPS TO BE MONITORED AND TO RELAY MESSAGE TO HMI ON LOCATION OF ACTIVATED E-STOP.

NOTES:

UNLESS OTHERWISE SPECIFIED
ANG ±1° FRACTIONAL ±1/16
2 PL ±.06 3 PL ±.030
HOLES & SLOTS ±.015
MM 0 PL ±1.5 1 PL ±.75
INTERPRET DIM AND TOL PER
ASME Y14.5-2009

THIRD ANGLE PROJECTION

DRFTR	JML	DATE 02/01/2021
CHKD	AC	DATE 02/01/2021
APVD	AC	DATE 02/01/2021

THIS DOCUMENT CONTAINS INFORMATION THAT IS PROPRIETARY AND CONFIDENTIAL TO JOHN BEAN TECHNOLOGIES CORPORATION AND ITS AFFILIATES, AND MAY NOT BE PUBLICLY DISCLOSED WITHOUT THE EXPRESS WRITTEN PERMISSION OF JOHN BEAN TECHNOLOGIES CORPORATION. UNDER ANY U.S. GOVERNMENT PRIME CONTRACT THIS INFORMATION SHALL BE CONSIDERED TO BE "LIMITED RIGHTS DATA".
© 2021 JBT

Jetway® Systems
Ogden, UT, U.S.A.

TITLE: ELECTRICAL SUBMITTAL PBB APRON DRIVE ERIE INTERNATIONAL AIRPORT

SIZE	CAGE CODE	DWG NO.	PROJECT	REV
D	54077	EWB-1	FAZ-ERI_E	A

SCALE: NONE WEIGHT: LB: KG:

AUTOCAD

FOR REFERENCE ONLY

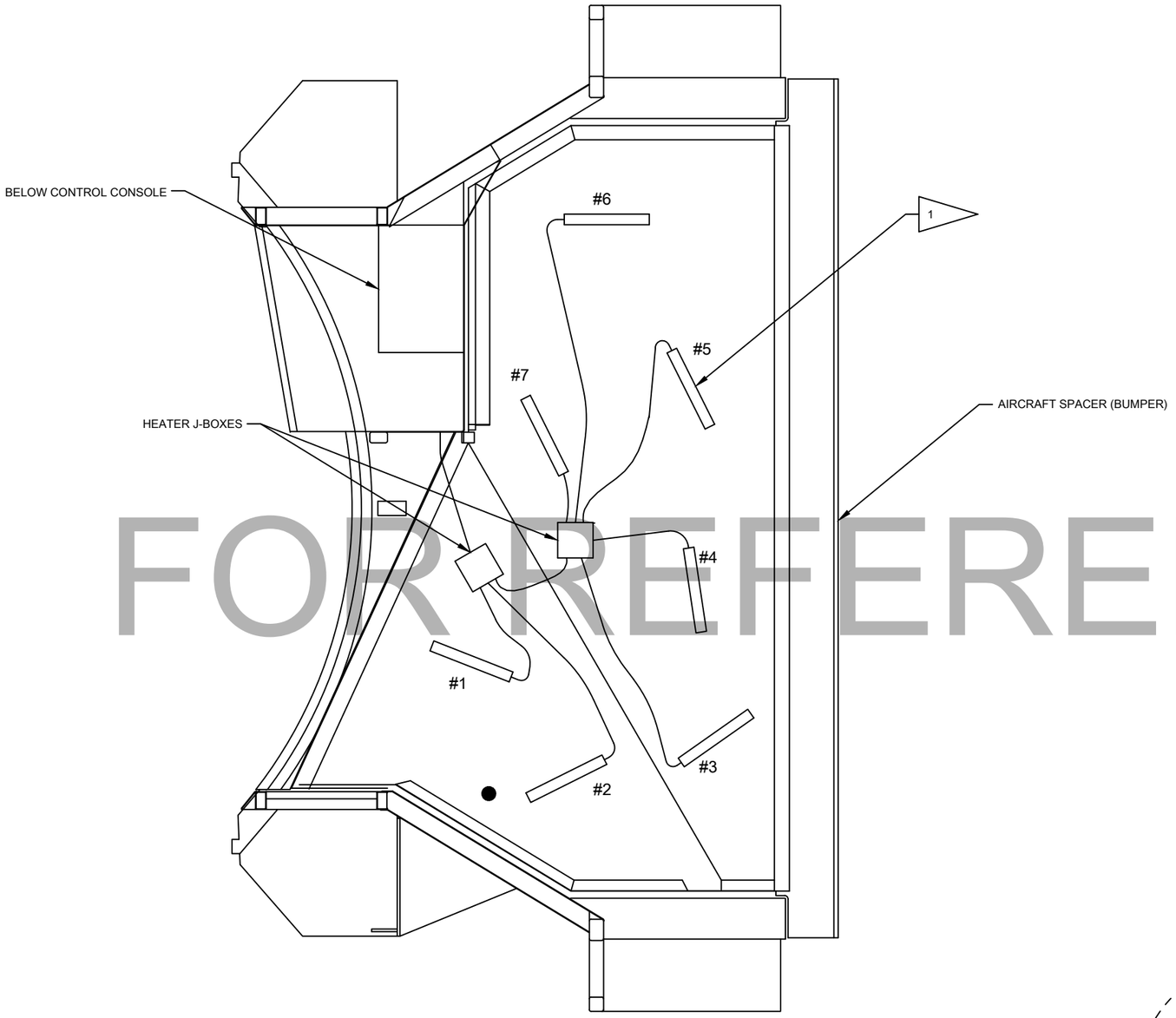

DEICER STANDARD FLOOR

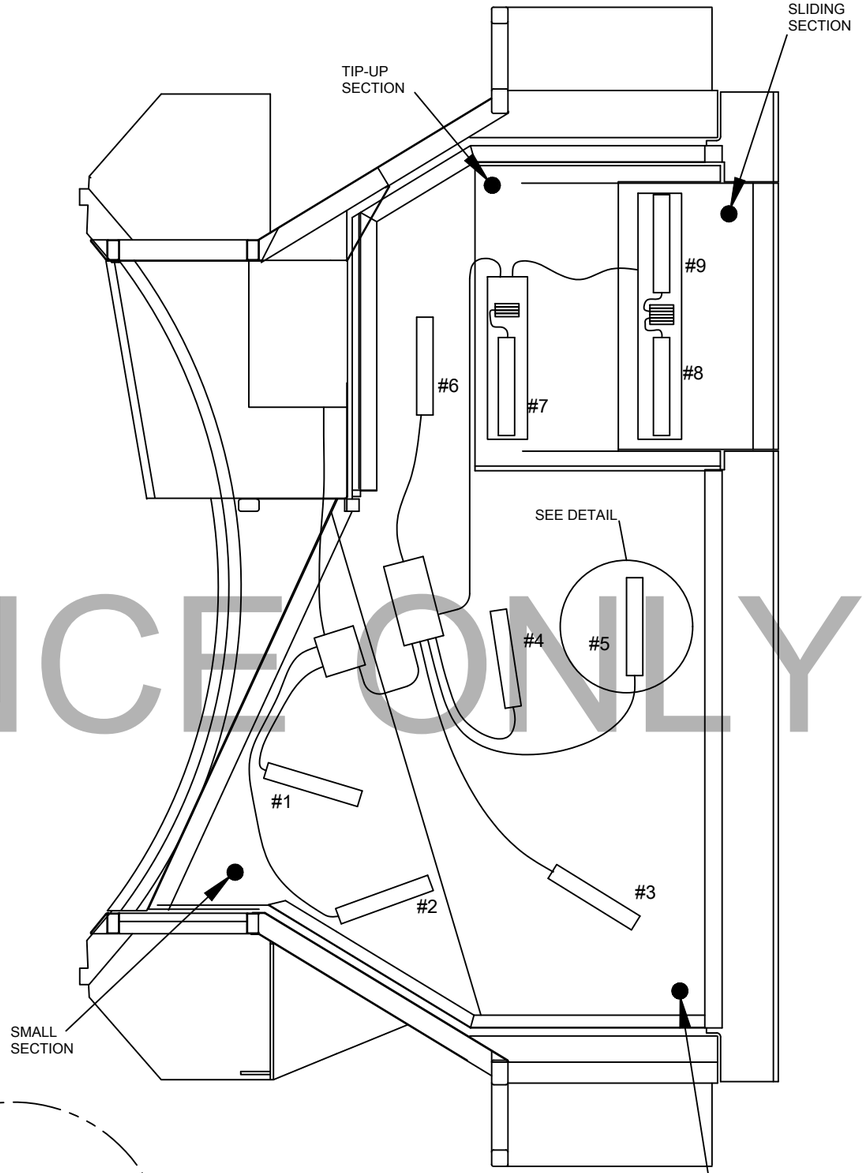

DEICER W/CE FLOOR

LARGE SECTION

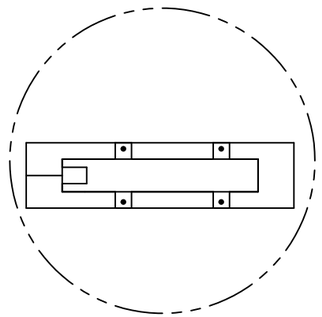

NOTES:

1 HEATERS: 240VAC, 150W EACH

UNLESS OTHERWISE SPECIFIED ANG ±1° FRACTIONAL ±1/16 2 PL ±.06 3 PL ±.030 HOLES & SLOTS ±.015 MM 0 PL ±1.5 1 PL ±.75 INTERPRET DIM AND TOL PER ASME Y14.5-2009 THIRD ANGLE PROJECTION	DRFTR: JML 02/01/2021 CHKD: AC 02/01/2021 APVD: AC 02/01/2021 THIS DOCUMENT CONTAINS INFORMATION THAT IS PROPRIETARY AND CONFIDENTIAL TO JOHN BEAN TECHNOLOGIES CORPORATION AND ITS AFFILIATES, AND MAY NOT BE PUBLICLY DISCLOSED WITHOUT THE EXPRESS WRITTEN PERMISSION OF JOHN BEAN TECHNOLOGIES CORPORATION. UNDER ANY U.S. GOVERNMENT PRIME CONTRACT THIS INFORMATION SHALL BE CONSIDERED TO BE "LIMITED RIGHTS DATA". © 2021 JBT	Jetway® Systems Ogden, UT, U.S.A. TITLE: ELECTRICAL SUBMITTAL PBB APRON DRIVE ERIE INTERNATIONAL AIRPORT SIZE: D · CAGE CODE: 54077 · DWG NO.: ESP-1 · PROJECT: FAZ-ERI_E · REV: A SCALE: NONE · WEIGHT: LB: KG: · AUTOCAD

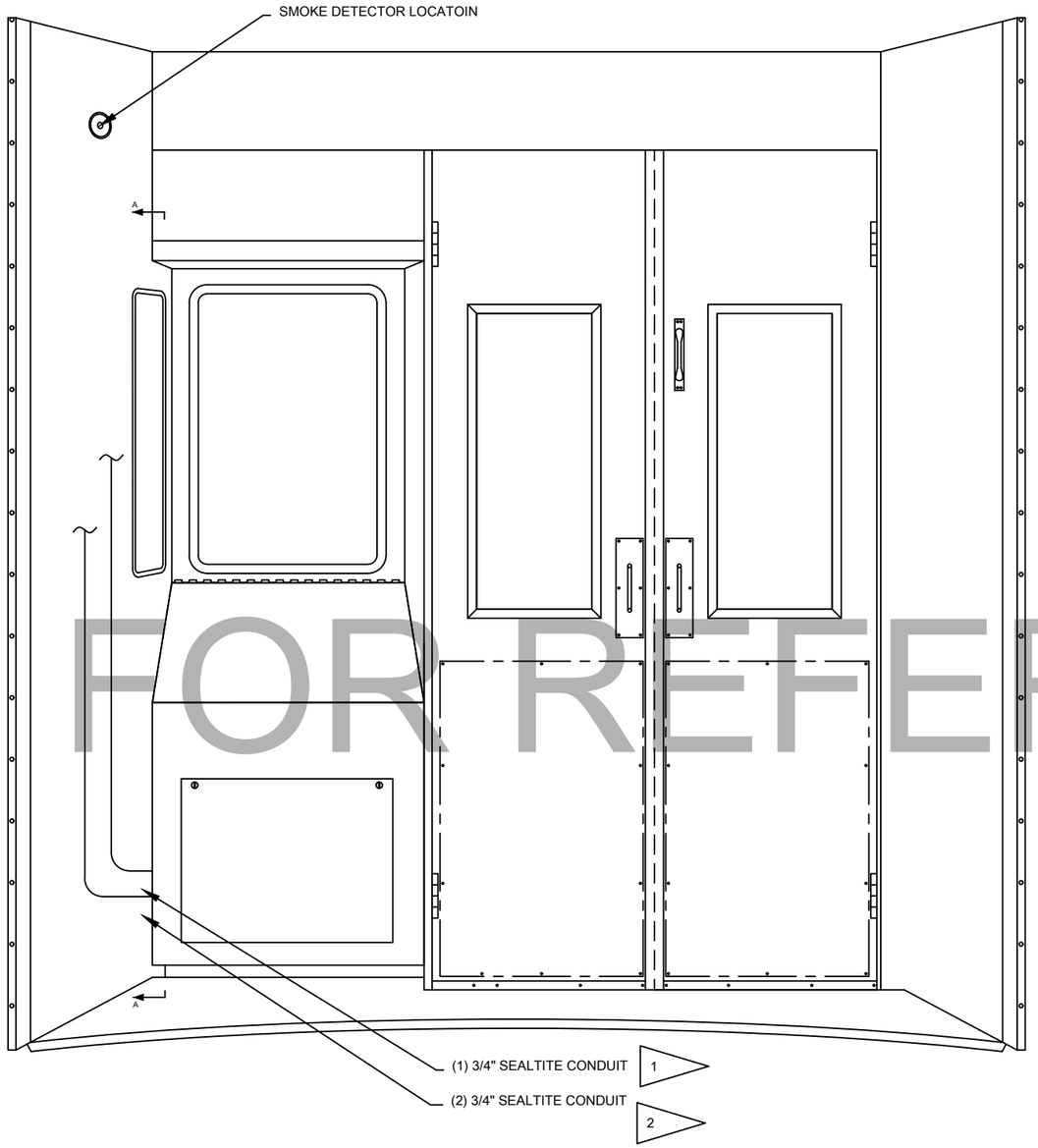

SECTION A-A

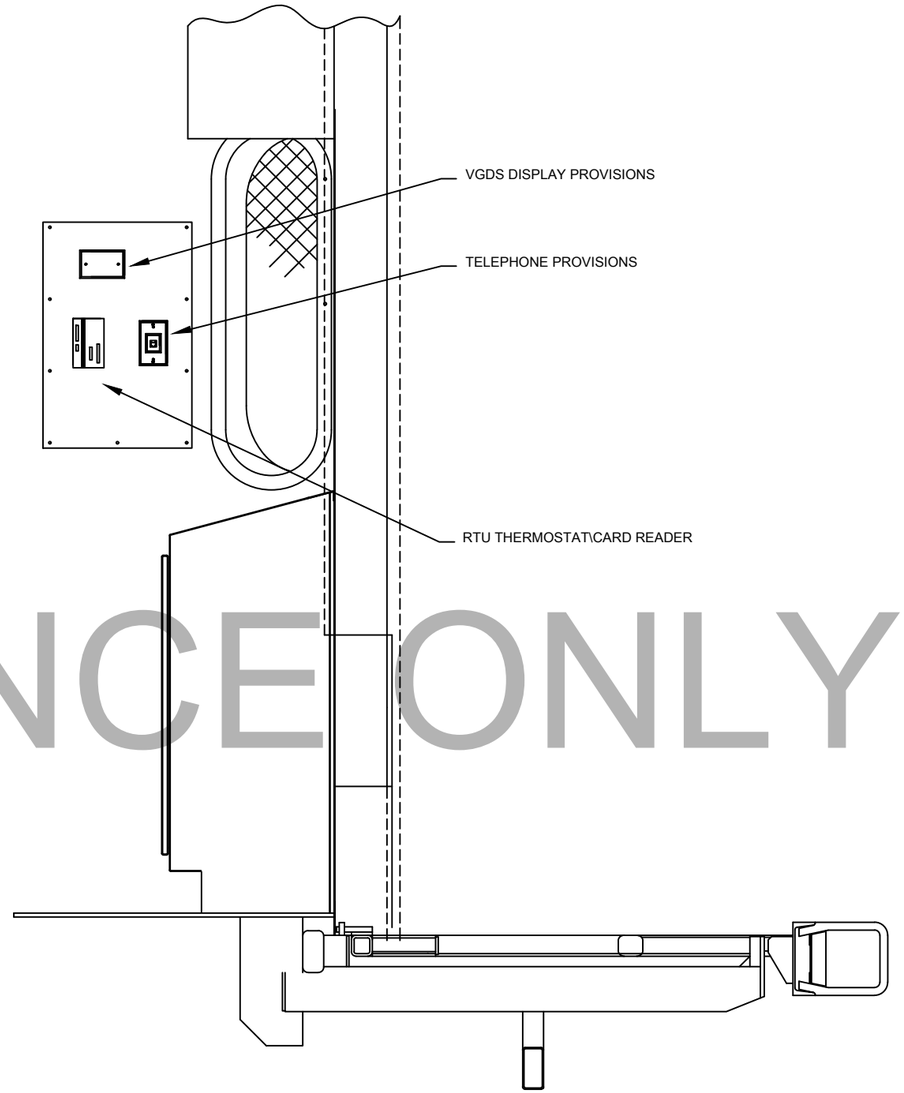

FOR REFERENCE ONLY

2 ROUTING TO CARD READER/THERMOSTAT.

1 ROUTING TO TELEPHONE BOX.

NOTES:

UNLESS OTHERWISE SPECIFIED
ANG ±1° FRACTIONAL ±1/16
2 PL ±.06 3 PL ±.030
HOLES & SLOTS ±.015
MM 0 PL ±1.5 1 PL ±.75
INTERPRET DIM AND TOL PER
ASME Y14.5-2009

THIRD ANGLE PROJECTION

DRFTR	JML	DATE: 02/01/2021
CHKD:	AC	DATE: 02/01/2021
APVD:	AC	DATE: 02/01/2021

THIS DOCUMENT CONTAINS INFORMATION THAT IS PROPRIETARY AND CONFIDENTIAL TO JOHN BEAN TECHNOLOGIES CORPORATION AND ITS AFFILIATES, AND MAY NOT BE PUBLICLY DISCLOSED WITHOUT THE EXPRESS WRITTEN PERMISSION OF JOHN BEAN TECHNOLOGIES CORPORATION. UNDER ANY U.S. GOVERNMENT PRIME CONTRACT THIS INFORMATION SHALL BE CONSIDERED TO BE "LIMITED RIGHTS DATA".

© 2021 JBT

Jetway® Systems
Ogden, UT, U.S.A.

TITLE: ELECTRICAL SUBMITTAL PBB APRON DRIVE ERIE INTERNATIONAL AIRPORT

SIZE	CAGE CODE	DWG NO.	PROJECT	REV
D	54077	ESP-7	FAZ-ERI_E	A

SCALE: NONE WEIGHT: LB: KG:

AUTOCAD

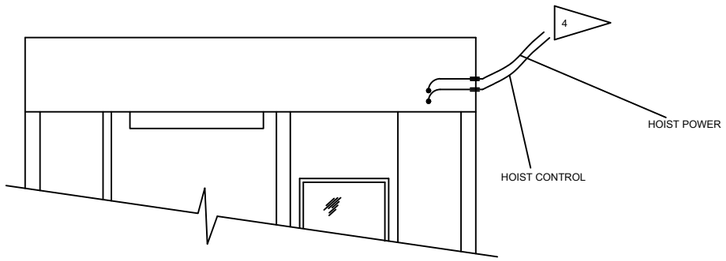

PARTIAL CAB VIEW
CABLE

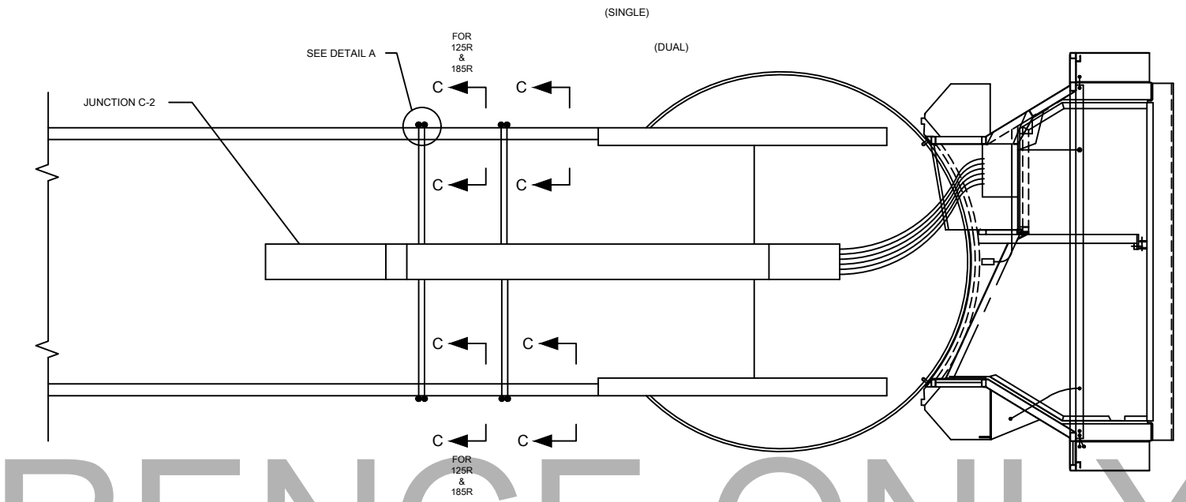

TUNNEL MOUNTED HOIST CONDUIT
WIREWAY

FOR REFERENCE ONLY

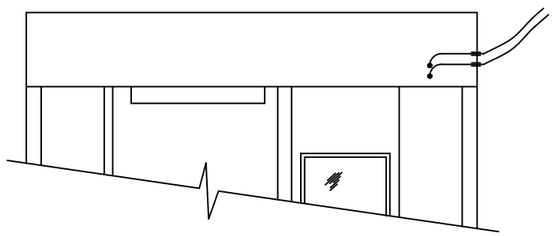

PARTIAL CAB VIEW
SEALTITE

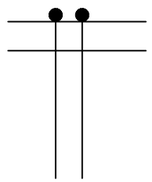

DETAIL A

UNLESS OTHERWISE SPECIFIED
ANG ±1° FRACTIONAL ±1/16
2 PL ±.06 3 PL ±.030
HOLES & SLOTS ±.015
MM 0 PL ±1.5 1 PL ±.75
INTERPRET DIM AND TOL PER
ASME Y14.5-2009

THIRD ANGLE PROJECTION

DRFTR	JML	DATE 02/01/2021
CHKD	AC	DATE 02/01/2021
APVD	AC	DATE 02/01/2021

THIS DOCUMENT CONTAINS INFORMATION THAT IS PROPRIETARY AND CONFIDENTIAL TO JOHN BEAN TECHNOLOGIES CORPORATION AND ITS AFFILIATES, AND MAY NOT BE PUBLICLY DISCLOSED WITHOUT THE EXPRESS WRITTEN PERMISSION OF JOHN BEAN TECHNOLOGIES CORPORATION. UNDER ANY U.S. GOVERNMENT PRIME CONTRACT THIS INFORMATION SHALL BE CONSIDERED TO BE "LIMITED RIGHTS DATA".
© 2021 JBT

Jetway® Systems
Ogden, UT, U.S.A.

TITLE
ELECTRICAL SUBMITTAL PBB
APRON DRIVE ERIE
INTERNATIONAL AIRPORT

SIZE	CAGE CODE	DWG NO.	PROJECT	REV
D	54077	ESP-13	FAZ-ERI_E	A

SCALE: NONE WEIGHT: LB: KG:

AUTOCAD

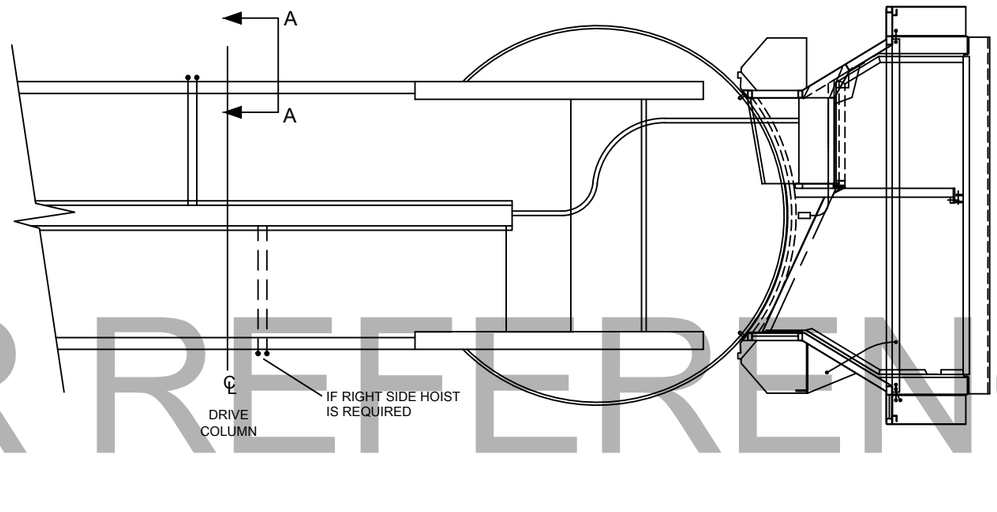

REFLECTED FLOOR PLAN

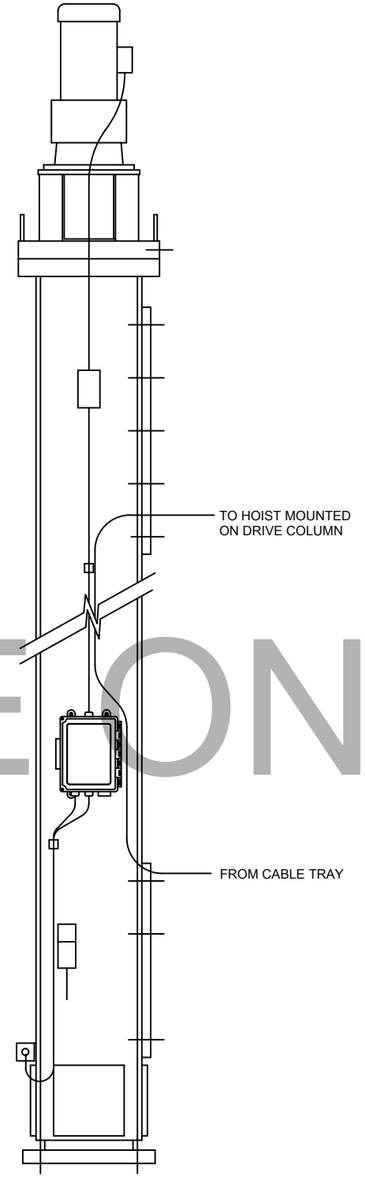

VIEW A-A

FOR REFERENCE ONLY

UNLESS OTHERWISE SPECIFIED
ANG ±1° FRACTIONAL ±1/16
2 PL ±.06 3 PL ±.030
HOLES & SLOTS ±.015
MM 0 PL ±1.5 1 PL ±.75
INTERPRET DIM AND TOL PER
ASME Y14.5-2009

THIRD ANGLE PROJECTION

DRFTR	JML	02/01/2021
CHKD	AC	02/01/2021
APVD	AC	02/01/2021

THIS DOCUMENT CONTAINS INFORMATION THAT IS PROPRIETARY AND CONFIDENTIAL TO JOHN BEAN TECHNOLOGIES CORPORATION AND ITS AFFILIATES, AND MAY NOT BE PUBLICLY DISCLOSED WITHOUT THE EXPRESS WRITTEN PERMISSION OF JOHN BEAN TECHNOLOGIES CORPORATION. UNDER ANY U.S. GOVERNMENT PRIME CONTRACT THIS INFORMATION SHALL BE CONSIDERED TO BE "LIMITED RIGHTS DATA".
© 2021 JBT

Jetway® Systems
Ogden, UT, U.S.A.

TITLE: ELECTRICAL SUBMITTAL PBB
APRON DRIVE ERIE
INTERNATIONAL AIRPORT

SIZE	CAGE CODE	DWG NO.	PROJECT	REV
D	54077	ESP-14	FAZ-ERI_E	A

SCALE: NONE
WEIGHT: LB: KG:

AUTOCAD

REVISION HISTORY

SHEET	ZONE	REV	DESCRIPTION	ECO #	DATE	APPROVED
-	-	A	INITIAL SUBMITTAL RELEASE	N/A	2021/02/02	CAM

ERIE MUNICIPAL AIRPORT
ERIE INTERNATIONAL AIRPORT (ERI)

JBT, Jetway Systems

DRAWING INDEX	
SHEET NUMBER	DRAWING TITLE
1	COVER SHEET / EQUIPMENT CONFIGURATION
2	90KVA / 28VDC JTP3 CONFIGURATION
3	CONTROL SIDE COMPONENTS
4	INVERTER SIDE COMPONENTS
5	CENTER COMPONENTS
6	WIRING CONTROL
7	WIRING CENTER
8	WIRING INVERTER / SCR SIDE
9	WIRING OUTPUT
10	CUSTOMER CONNECTIONS
11	FIELD REF
12	CONTROL STATION
13	FIELD INSTALL
14	FIELD INSTALL
15	HOIST FIELD INSTALL CAB
16	HIOIST FIELD INSTALL TUNNEL
17	AIRCRAFT CABLES

EQUIPMENT CONFIGURATION					
GATE NO.	SN	MFG	JETPOWER MODEL NO.	CONTROLLER	AIRCRAFT CABLE
3	46832	JBT	90KVA / 28VDC JETPOWER 3	CONT JTP 5 BTN	400HZ ACFT CABLE JACKETED 60' 28VDC BANDED CABLE 50'

EXTERIOR FINISH COLOR
ARCTIC WHITE PLNE S+, JETWAY P/N 3646145 (SHERWIN WILLIAMS #F63WV7 (POLANE S+))

FOR REFERENCE ONLY

UNLESS OTHERWISE SPECIFIED
ANG ±1° FRACTIONAL ±1/16
2 PL ±.06 3 PL ±.030
HOLES & SLOTS ±.015
MM 0 PL ±1.5 1 PL ±.75
INTERPRET DIM AND TOL PER
ASME Y14.5-2009

THIRD ANGLE PROJECTION

DRFTR CAM DATE 2021/02/02
CHKD - DATE -
APVD MLF DATE 2021/02/02

THIS DOCUMENT CONTAINS INFORMATION THAT IS PROPRIETARY AND CONFIDENTIAL TO JOHN BEAN TECHNOLOGIES CORPORATION AND ITS AFFILIATES, AND MAY NOT BE PUBLICLY DISCLOSED WITHOUT THE EXPRESS WRITTEN PERMISSION OF JOHN BEAN TECHNOLOGIES CORPORATION. UNDER ANY U.S. GOVERNMENT PRIME CONTRACT THIS INFORMATION SHALL BE CONSIDERED TO BE "LIMITED RIGHTS DATA".

© 2021 JBT

Jetway® Systems
Ogden, UT, U.S.A.

TITLE
SUBMITTAL : 400 HZ
ERIE INT'L AIRPORT (ERI)

SIZE	CAGE CODE	DWG NO.	REV
D	54077	FAZ-ERI_J	A

SCALE: NONE WEIGHT: LB: - KG: - SHEET 1 OF 17

AUTOCAD

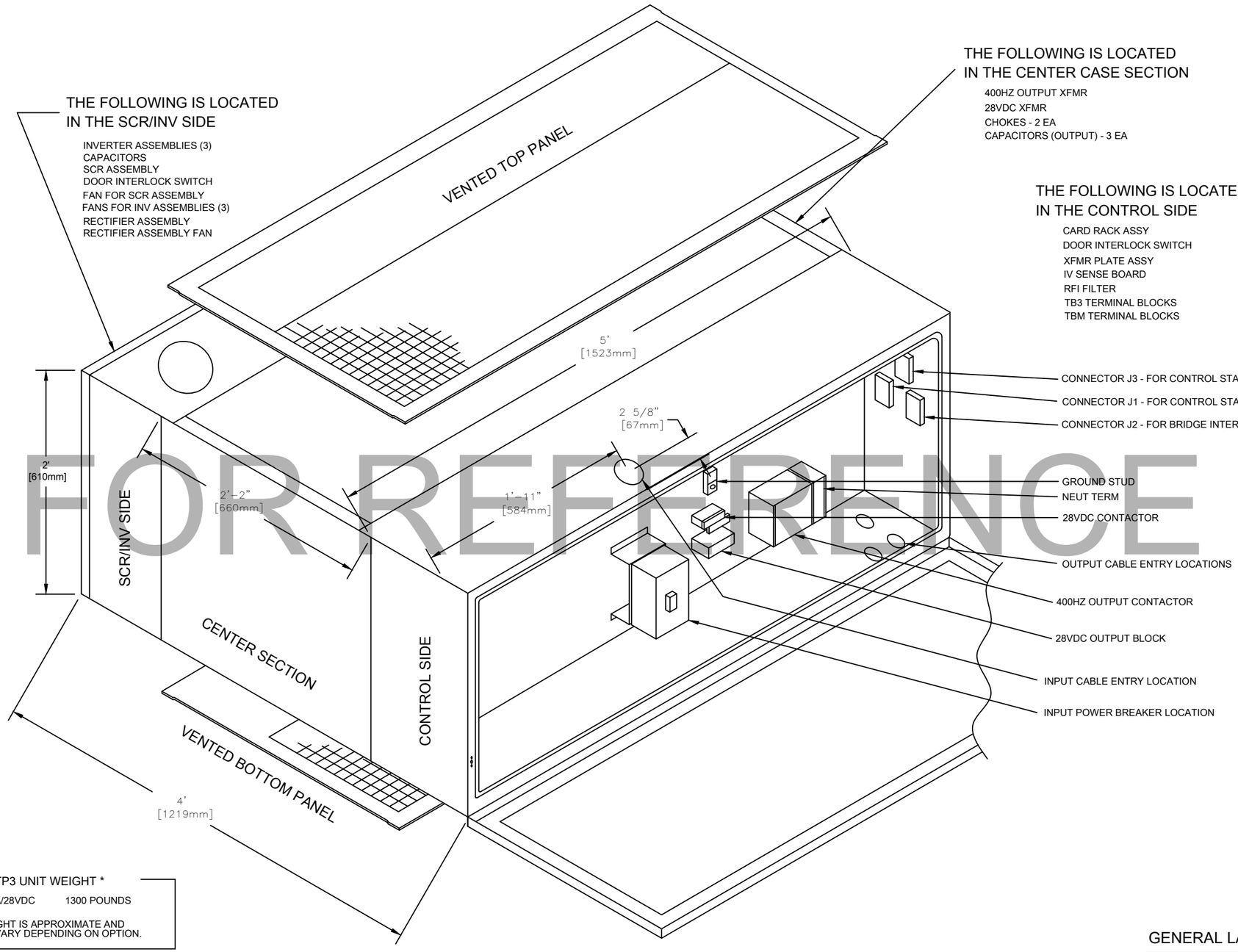

GENERAL VIEW OF THE ENCLOSURE

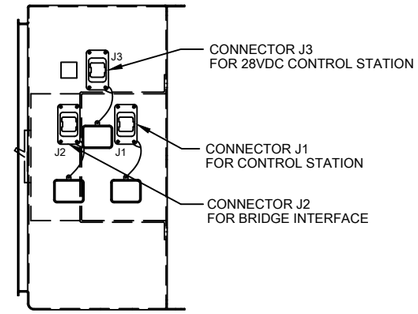

CONNECTORS

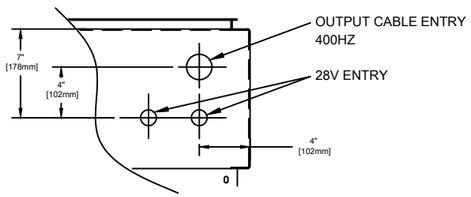

OUTPUT CABLE ENTRY LOCATION

JTP3 UNIT WEIGHT *

90KVA/28VDC 1300 POUNDS

* WEIGHT IS APPROXIMATE AND MAY VARY DEPENDING ON OPTION.

NOTE: WHEN WORKING ON THE JTP3 REFER TO THE MANUAL FOR MORE DETAIL.

GENERAL LAYOUT JTP3 90KVA / 28VDC COMBO

UNLESS OTHERWISE SPECIFIED
ANG ±1° FRACTIONAL ±1/16
2 PL ±.06 3 PL ±.030
HOLES & SLOTS ±.015
MM 0 PL ±1.5 1 PL ±.75
INTERPRET DIM AND TOL PER
ASME Y14.5-2009
THIRD ANGLE PROJECTION

DRFTR CAM DATE 2021/02/02
CHKD - DATE -
APVD MLF DATE 2021/02/02

THIS DOCUMENT CONTAINS INFORMATION THAT IS PROPRIETARY AND CONFIDENTIAL TO JOHN BEAN TECHNOLOGIES CORPORATION AND ITS AFFILIATES, AND MAY NOT BE PUBLICLY DISCLOSED WITHOUT THE EXPRESS WRITTEN PERMISSION OF JOHN BEAN TECHNOLOGIES CORPORATION. UNDER ANY U.S. GOVERNMENT PRIME CONTRACT THIS INFORMATION SHALL BE CONSIDERED TO BE "LIMITED RIGHTS DATA".
© 2021 JBT

Jetway® Systems
Ogden, UT, U.S.A.

TITLE
SUBMITTAL : 400 HZ
ERIE INT'L AIRPORT (ERI)

SIZE	CAGE CODE	DWG NO.	REV
D	54077	FAZ-ERI_J	A

SCALE: NONE WEIGHT: LB: - KG: - SHEET 2 OF 17

AUTOCAD

FOR REFERENCE ONLY

FOR REFERENCE ONLY

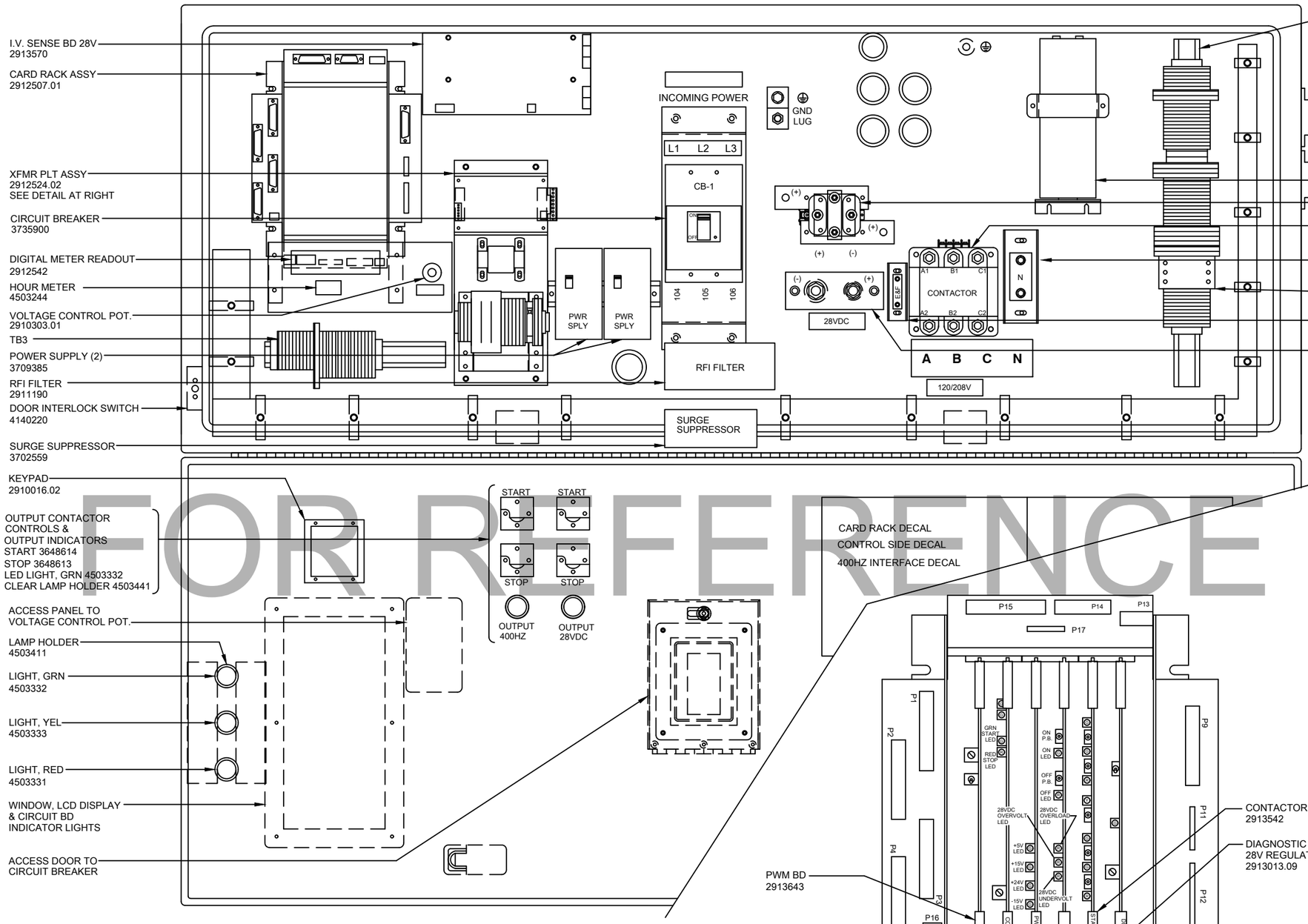

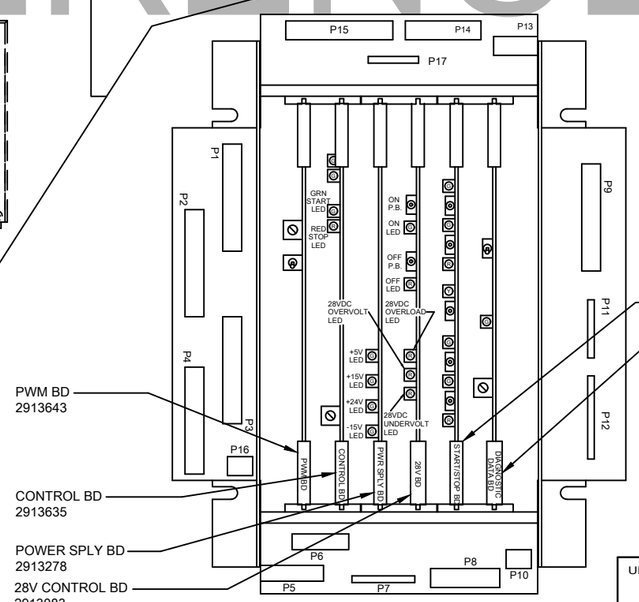

CARD RACK DETAIL

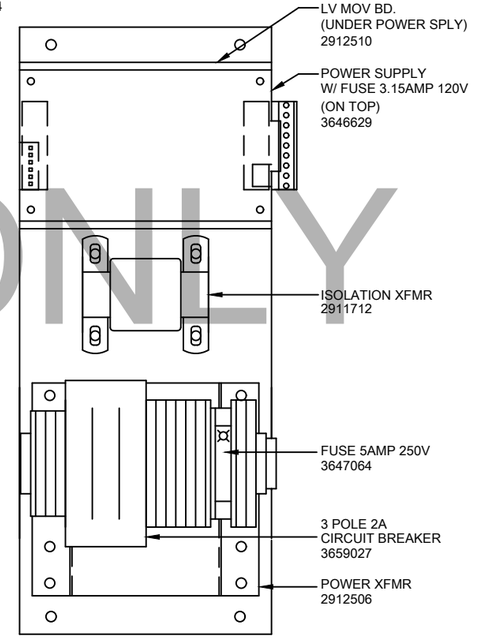

XFMR PLATE DETAIL

UNLESS OTHERWISE SPECIFIED
ANG ±1° FRACTIONAL ±1/16
2 PL ±.06 3 PL ±.030
HOLES & SLOTS ±.015
MM 0 PL ±1.5 1 PL ±.75
INTERPRET DIM AND TOL PER
ASME Y14.5-2009
THIRD ANGLE PROJECTION

DRFTR	CAM	DATE 2021/02/02
CHKD	-	DATE -
APVD	MLF	DATE 2021/02/02

THIS DOCUMENT CONTAINS INFORMATION THAT IS PROPRIETARY AND CONFIDENTIAL TO JOHN BEAN TECHNOLOGIES CORPORATION AND ITS AFFILIATES, AND MAY NOT BE PUBLICLY DISCLOSED WITHOUT THE EXPRESS WRITTEN PERMISSION OF JOHN BEAN TECHNOLOGIES CORPORATION. UNDER ANY U.S. GOVERNMENT PRIME CONTRACT THIS INFORMATION SHALL BE CONSIDERED TO BE "LIMITED RIGHTS DATA".
© 2021 JBT

Jetway® Systems
Ogden, UT, U.S.A.

TITLE
SUBMITTAL : 400 HZ
ERIE INT'L AIRPORT (ERI)

SIZE	CAGE CODE	DWG NO.	REV
D	54077	FAZ-ERI_J	A

SCALE: NONE | WEIGHT: LB: - KG: - | SHEET 3 OF 17

AUTOCAD

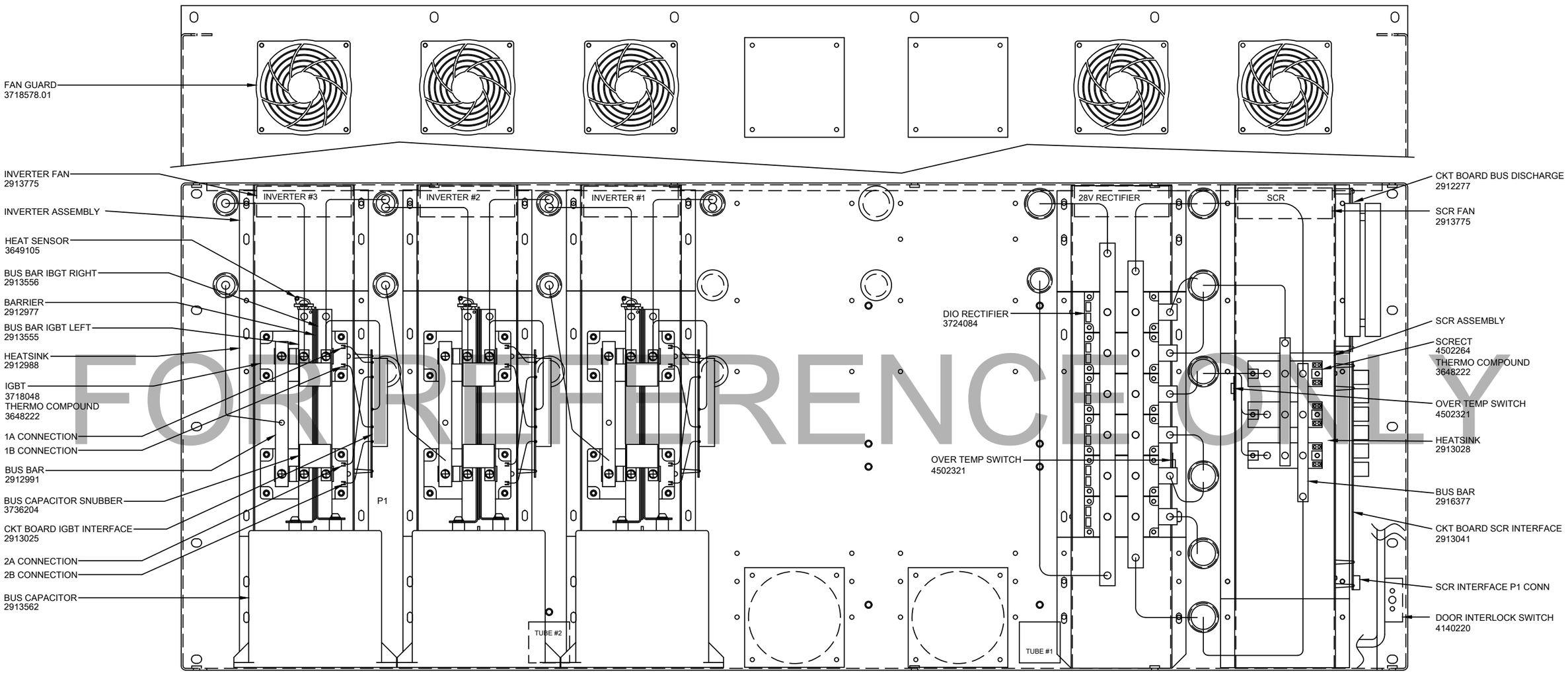

FOR REFERENCE ONLY

UNLESS OTHERWISE SPECIFIED
ANG ±1° FRACTIONAL ±1/16
2 PL ±.06 3 PL ±.030
HOLES & SLOTS ±.015
MM 0 PL ±1.5 1 PL ±.75
INTERPRET DIM AND TOL PER
ASME Y14.5-2009
THIRD ANGLE PROJECTION

DRFTR	CAM	2021/02/02
CHKD	-	-
APVD	MLF	2021/02/02

THIS DOCUMENT CONTAINS INFORMATION THAT IS PROPRIETARY AND CONFIDENTIAL TO JOHN BEAN TECHNOLOGIES CORPORATION AND ITS AFFILIATES, AND MAY NOT BE PUBLICLY DISCLOSED WITHOUT THE EXPRESS WRITTEN PERMISSION OF JOHN BEAN TECHNOLOGIES CORPORATION. UNDER ANY U.S. GOVERNMENT PRIME CONTRACT THIS INFORMATION SHALL BE CONSIDERED TO BE "LIMITED RIGHTS DATA".
© 2021 JBT

Jetway® Systems
Ogden, UT, U.S.A.

TITLE
SUBMITTAL : 400 HZ
ERIE INT'L AIRPORT (ERI)

SIZE	CAGE CODE	DWG NO.	REV
D	54077	FAZ-ERI_J	A

SCALE: NONE
WEIGHT: LB: - KG: -
SHEET 4 OF 17
AUTOCAD

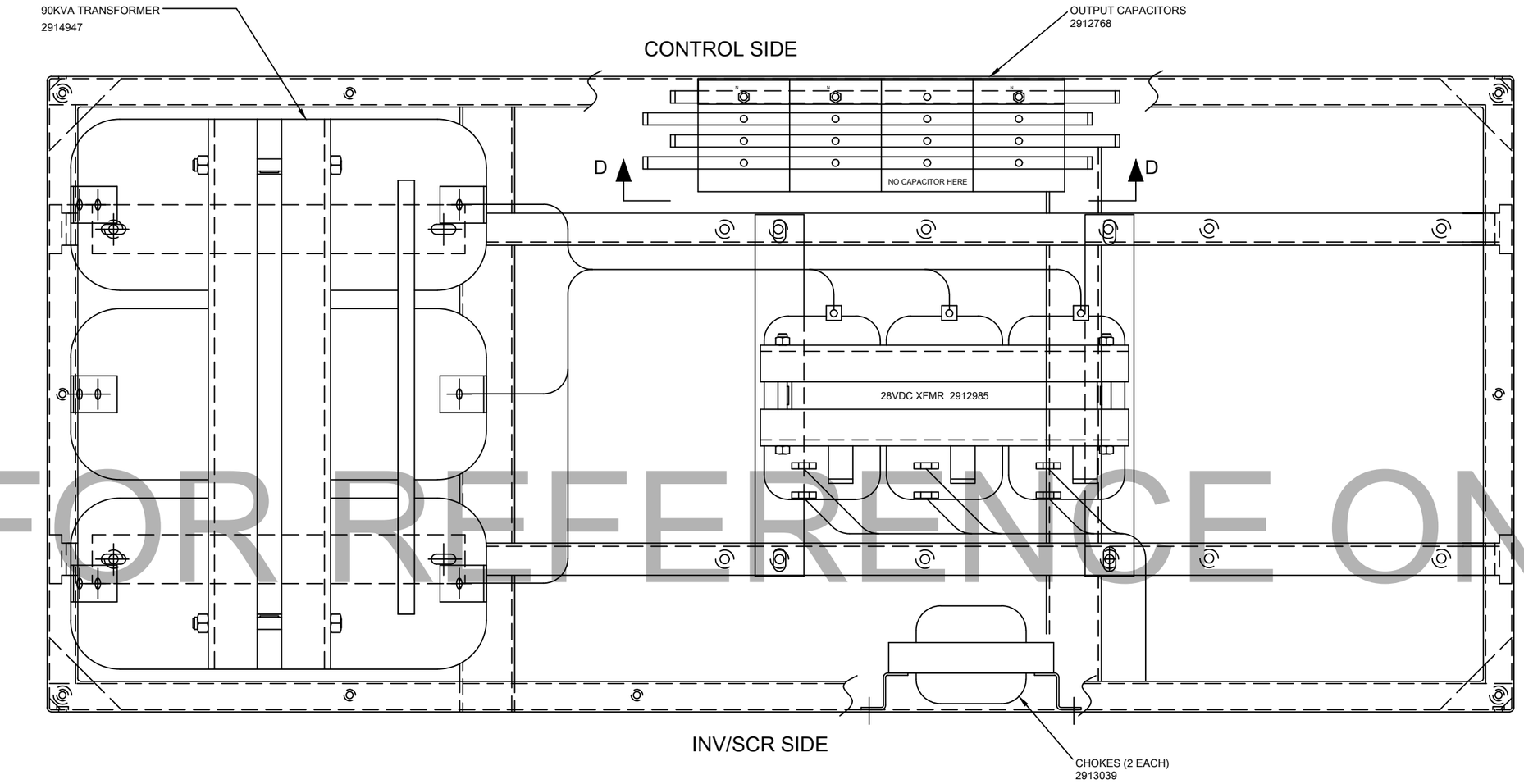

CENTER CASE

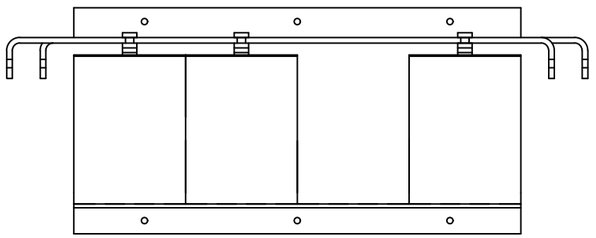

VIEW D-D

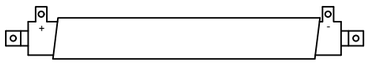

RESISTOR
3656160

CENTER CASE COMPONENTS

FOR REFERENCE ONLY

UNLESS OTHERWISE SPECIFIED
ANG ±1° FRACTIONAL ±1/16
2 PL ±.06 3 PL ±.030
HOLES & SLOTS ±.015
MM 0 PL ±1.5 1 PL ±.75
INTERPRET DIM AND TOL PER
ASME Y14.5-2009

THIRD ANGLE PROJECTION

DRFTR	CAM	DATE	2021/02/02
CHKD	-	DATE	-
APVD	MLF	DATE	2021/02/02

THIS DOCUMENT CONTAINS INFORMATION THAT IS PROPRIETARY AND CONFIDENTIAL TO JOHN BEAN TECHNOLOGIES CORPORATION AND ITS AFFILIATES, AND MAY NOT BE PUBLICLY DISCLOSED WITHOUT THE EXPRESS WRITTEN PERMISSION OF JOHN BEAN TECHNOLOGIES CORPORATION. UNDER ANY U.S. GOVERNMENT PRIME CONTRACT THIS INFORMATION SHALL BE CONSIDERED TO BE "LIMITED RIGHTS DATA".
© 2021 JBT

Jetway® Systems
Ogden, UT, U.S.A.

TITLE
SUBMITTAL : 400 HZ
ERIE INT'L AIRPORT (ERI)

SIZE	CAGE CODE	DWG NO.	REV
D	54077	FAZ-ERI_J	A

SCALE: NONE | WEIGHT: LB: - KG: - | SHEET 5 OF 17 | AUTOCAD

FOR REFERENCE ONLY

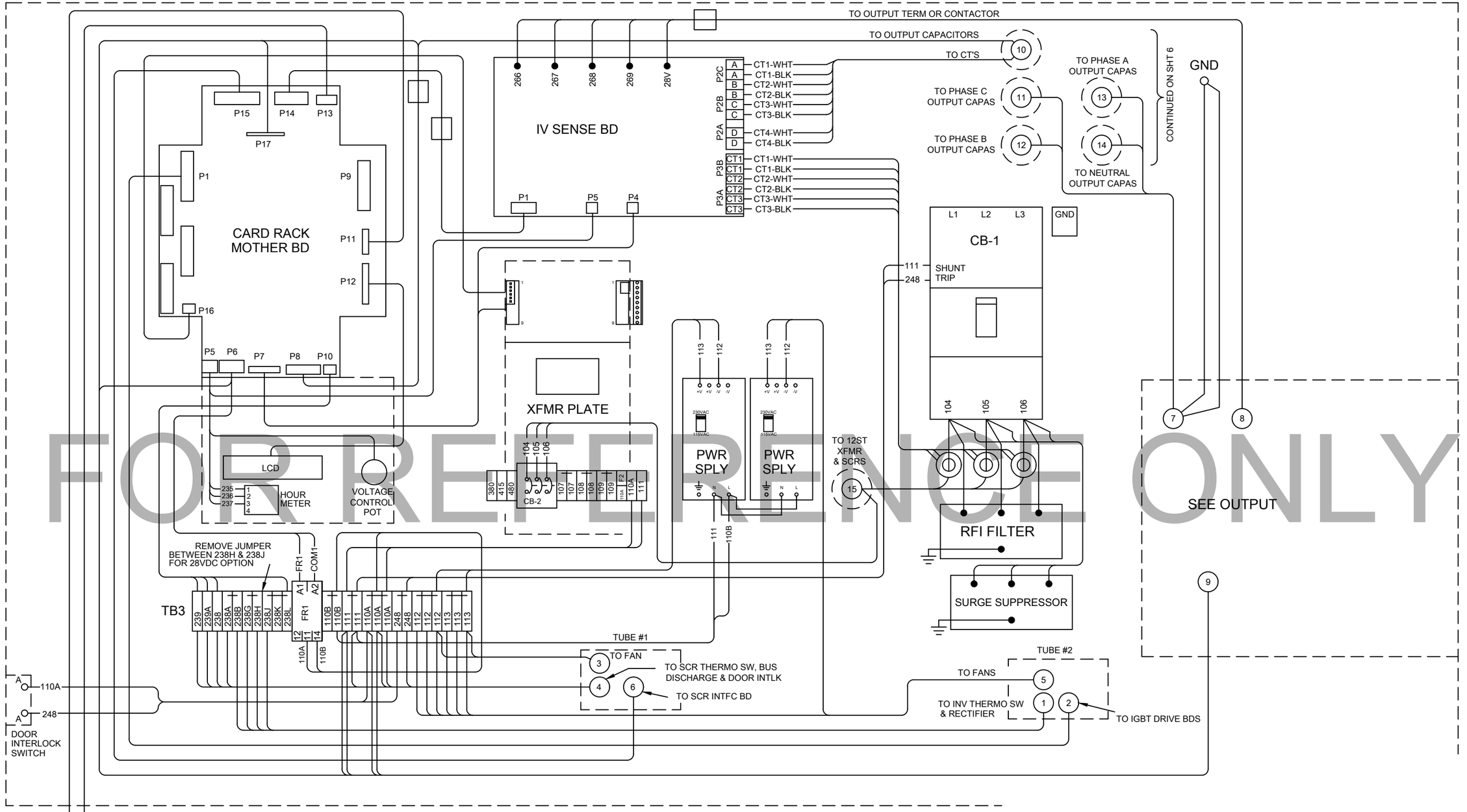

WIRING DIAGRAM CONTROL SIDE

UNLESS OTHERWISE SPECIFIED
ANG ±1° FRACTIONAL ±1/16
2 PL ±.06 3 PL ±.030
HOLES & SLOTS ±.015
MM 0 PL ±1.5 1 PL ±.75
INTERPRET DIM AND TOL PER ASME Y14.5-2009
THIRD ANGLE PROJECTION

DRFTR	CAM	2021/02/02
CHKD	-	-
APVD	MLF	2021/02/02

THIS DOCUMENT CONTAINS INFORMATION THAT IS PROPRIETARY AND CONFIDENTIAL TO JOHN BEAN TECHNOLOGIES CORPORATION AND ITS AFFILIATES, AND MAY NOT BE PUBLICLY DISCLOSED WITHOUT THE EXPRESS WRITTEN PERMISSION OF JOHN BEAN TECHNOLOGIES CORPORATION. UNDER ANY U.S. GOVERNMENT PRIME CONTRACT THIS INFORMATION SHALL BE CONSIDERED TO BE "LIMITED RIGHTS DATA".
© 2021 JBT

Jetway® Systems
Ogden, UT, U.S.A.

TITLE
SUBMITTAL : 400 HZ
ERIE INT'L AIRPORT (ERI)

SIZE	CAGE CODE	DWG NO.	REV
D	54077	FAZ-ERI_J	A

SCALE: NONE | WEIGHT: LB: - KG: - | SHEET 6 OF 17

AUTOCAD

FOR REFERENCE ONLY

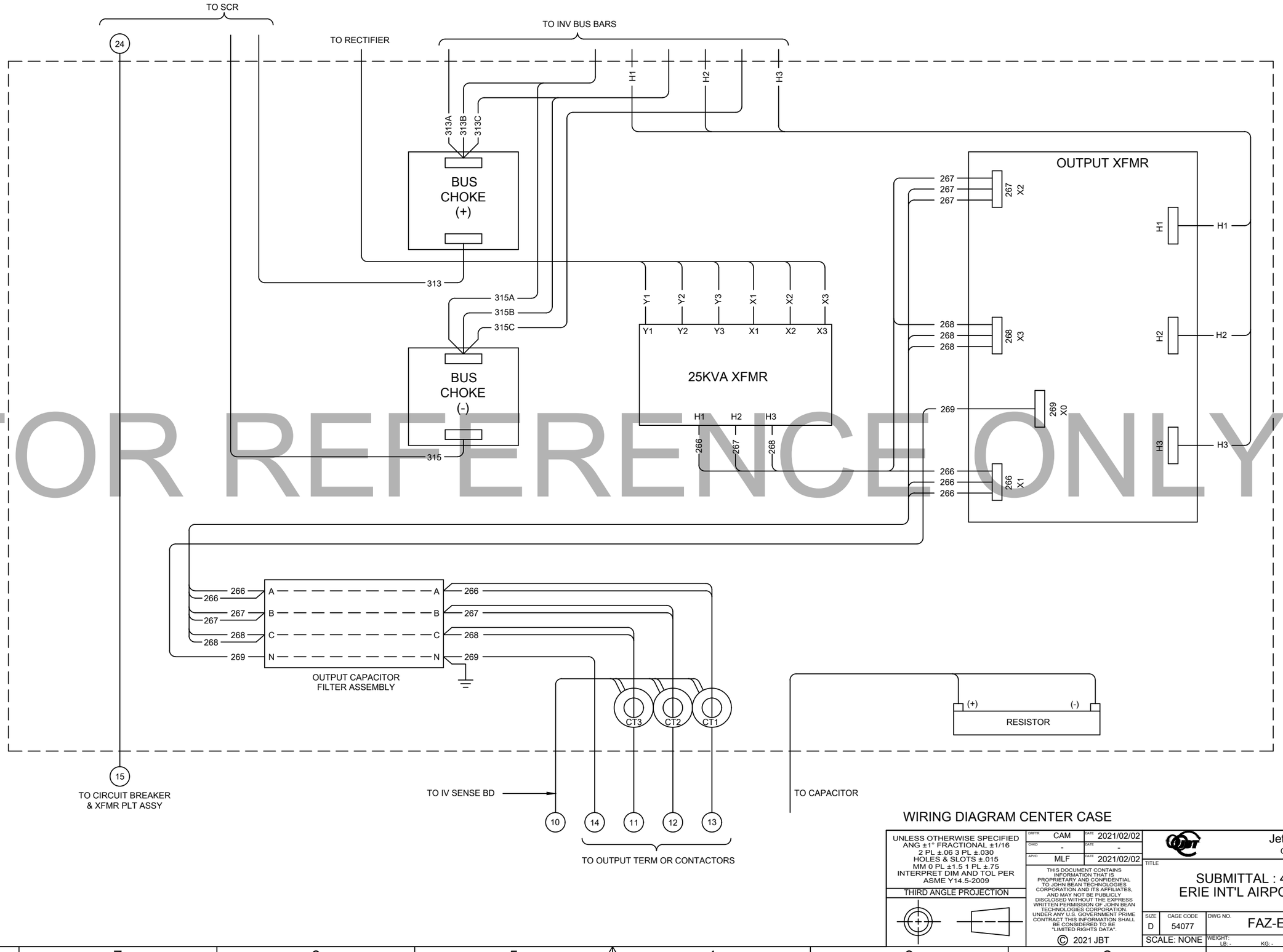

WIRING DIAGRAM CENTER CASE

UNLESS OTHERWISE SPECIFIED
ANG ±1° FRACTIONAL ±1/16
2 PL ±.06 3 PL ±.030
HOLES & SLOTS ±.015
MM 0 PL ±1.5 1 PL ±.75
INTERPRET DIM AND TOL PER ASME Y14.5-2009

THIRD ANGLE PROJECTION

DRFTR	CAM	DATE	2021/02/02
CHKD	-	DATE	-
APVD	MLF	DATE	2021/02/02

THIS DOCUMENT CONTAINS INFORMATION THAT IS PROPRIETARY AND CONFIDENTIAL TO JOHN BEAN TECHNOLOGIES CORPORATION AND ITS AFFILIATES, AND MAY NOT BE PUBLICLY DISCLOSED WITHOUT THE EXPRESS WRITTEN PERMISSION OF JOHN BEAN TECHNOLOGIES CORPORATION. UNDER ANY U.S. GOVERNMENT PRIME CONTRACT THIS INFORMATION SHALL BE CONSIDERED TO BE "LIMITED RIGHTS DATA".
© 2021 JBT

Jetway® Systems
Ogden, UT, U.S.A.

TITLE
SUBMITTAL : 400 HZ
ERIE INT'L AIRPORT (ERI)

SIZE	CAGE CODE	DWG NO.	REV
D	54077	FAZ-ERI_J	A
SCALE: NONE	WEIGHT: LB: - KG: -	SHEET 7 OF 17	

AUTOCAD

FOR REFERENCE ONLY

AIR FLOW

113 RED
112 BLK
FAN

TO BUS CHOKE (-)
TO BUS CHOKE (+)
TO OUTPUT XFMR H3
TO OUTPUT XFMR H2
TO OUTPUT XFMR H1

315C 313C 315B 313B 315A 313A
238C 238B 238C 238D 238D 238G

INV 3
INV 2
INV 1

H3 H2 H1

1C 1B 1A

TO P1 MOTHER BOARD
2 1 5
TO TB3
TO TERM BLOCKS THEN
TUBE #2

TO 28V BLOCK
(-) (+)
Y1 Y2 Y3
X1 X2 X3
238J 238H
TO 28V XFMR
TO 28V CNTOR
28V RECTIFIER

238 238A
BUS DISCHARGE
SCR ASSY
313(+)
106 106 105 105 104 104
P1
315(-)
110A A
248 A
DOOR INTERLOCK SWITCH
3 4 6
TO TB3
TO P15 MOTHER BOARD
12STEP SCR

TO BUS CHOKES
TO 12ST XFMR
TO XFMR PLT ASSY

INVERTER DRIVE BOARD WIRING DETAIL
RED 1A BLK BLK 1B RED
RED 2A BLK BLK 2B RED
1A 2A 1B 2B

WIRING DIAGRAM INVERTER / SCRECT SIDE

UNLESS OTHERWISE SPECIFIED
ANG ±1° FRACTIONAL ±1/16
2 PL ±.06 3 PL ±.030
HOLES & SLOTS ±.015
MM 0 PL ±1.5 1 PL ±.75
INTERPRET DIM AND TOL PER
ASME Y14.5-2009
THIRD ANGLE PROJECTION

DRFTR CAM DATE 2021/02/02
CHKD - DATE -
APVD MLF DATE 2021/02/02

THIS DOCUMENT CONTAINS INFORMATION THAT IS PROPRIETARY AND CONFIDENTIAL TO JOHN BEAN TECHNOLOGIES CORPORATION AND ITS AFFILIATES, AND MAY NOT BE PUBLICLY DISCLOSED WITHOUT THE EXPRESS WRITTEN PERMISSION OF JOHN BEAN TECHNOLOGIES CORPORATION. UNDER ANY U.S. GOVERNMENT PRIME CONTRACT THIS INFORMATION SHALL BE CONSIDERED TO BE "LIMITED RIGHTS DATA".
© 2021 JBT

Jetway® Systems
Ogden, UT, U.S.A.

TITLE
SUBMITTAL : 400 HZ
ERIE INT'L AIRPORT (ERI)

SIZE D | CAGE CODE 54077 | DWG NO. FAZ-ERI_J | REV A
SCALE: NONE | WEIGHT: LB: - KG: - | SHEET 8 OF 17

AUTOCAD

FOR REFERENCE ONLY

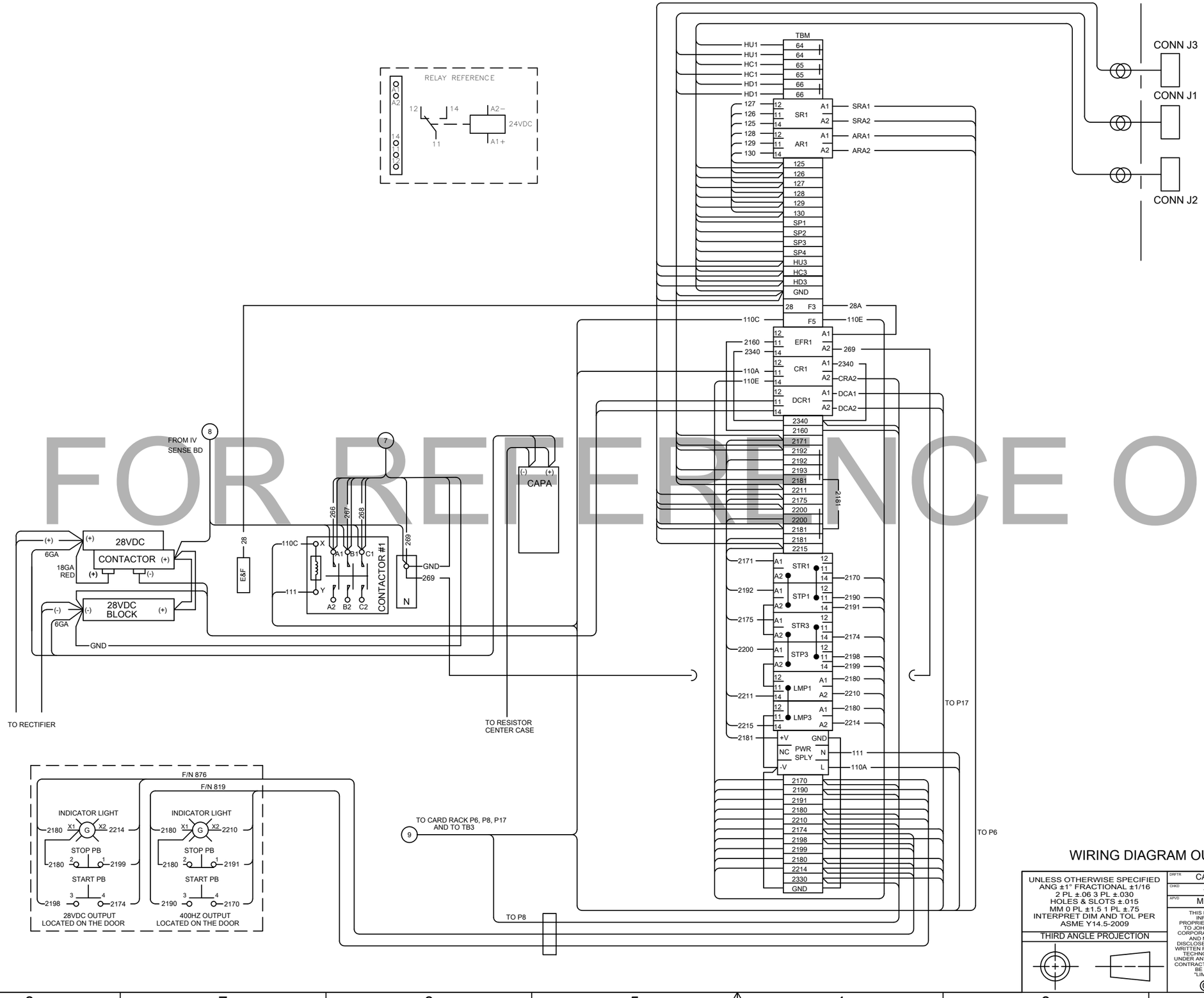

WIRING DIAGRAM OUTPUT AREA

UNLESS OTHERWISE SPECIFIED
ANG ±1° FRACTIONAL ±1/16
2 PL ±.06 3 PL ±.030
HOLES & SLOTS ±.015
MM 0 PL ±1.5 1 PL ±.75
INTERPRET DIM AND TOL PER
ASME Y14.5-2009
THIRD ANGLE PROJECTION

DRFTR	CAM	2021/02/02
CHKD	-	-
APVD	MLF	2021/02/02

THIS DOCUMENT CONTAINS INFORMATION THAT IS PROPRIETARY AND CONFIDENTIAL TO JOHN BEAN TECHNOLOGIES CORPORATION AND ITS AFFILIATES, AND MAY NOT BE PUBLICLY DISCLOSED WITHOUT THE EXPRESS WRITTEN PERMISSION OF JOHN BEAN TECHNOLOGIES CORPORATION. UNDER ANY U.S. GOVERNMENT PRIME CONTRACT THIS INFORMATION SHALL BE CONSIDERED TO BE "LIMITED RIGHTS DATA".
© 2021 JBT

Jetway® Systems
Ogden, UT, U.S.A.

TITLE
SUBMITTAL : 400 HZ
ERIE INT'L AIRPORT (ERI)

SIZE	CAGE CODE	DWG NO.	REV
D	54077	FAZ-ERI_J	A
SCALE: NONE		WEIGHT: LB: - KG: -	SHEET 9 OF 17

AUTOCAD

FOR REFERENCE ONLY

DANGER

HIGH VOLTAGE PRESENT
YOU MUST DISCONNECT THE
MAIN SOURCE OF POWER
FROM THIS UNIT
BEFORE SERVICING

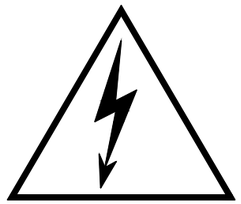

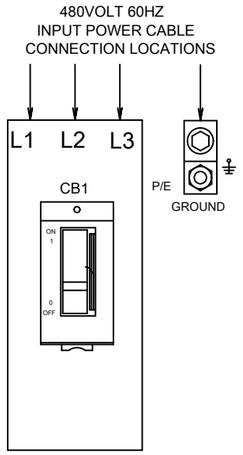

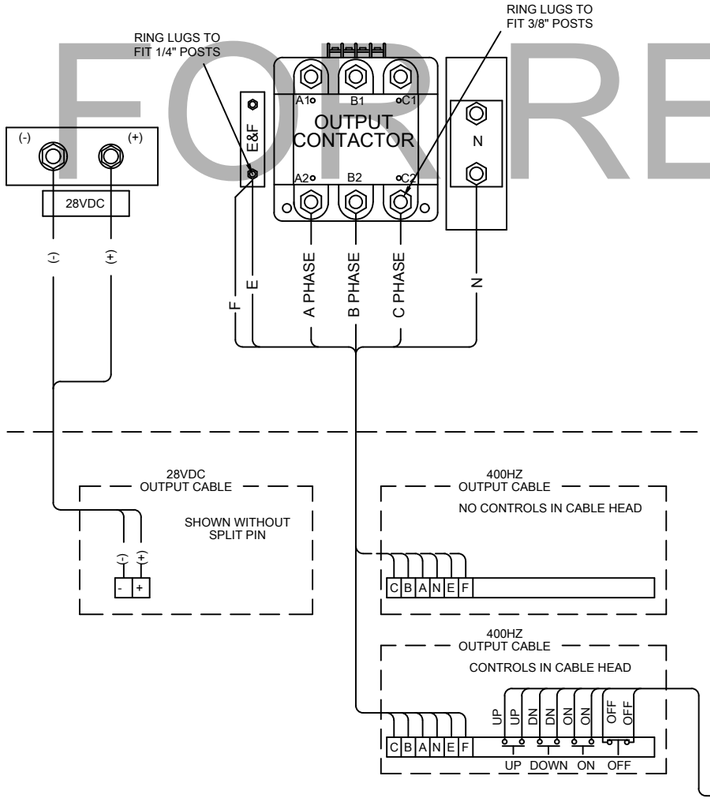

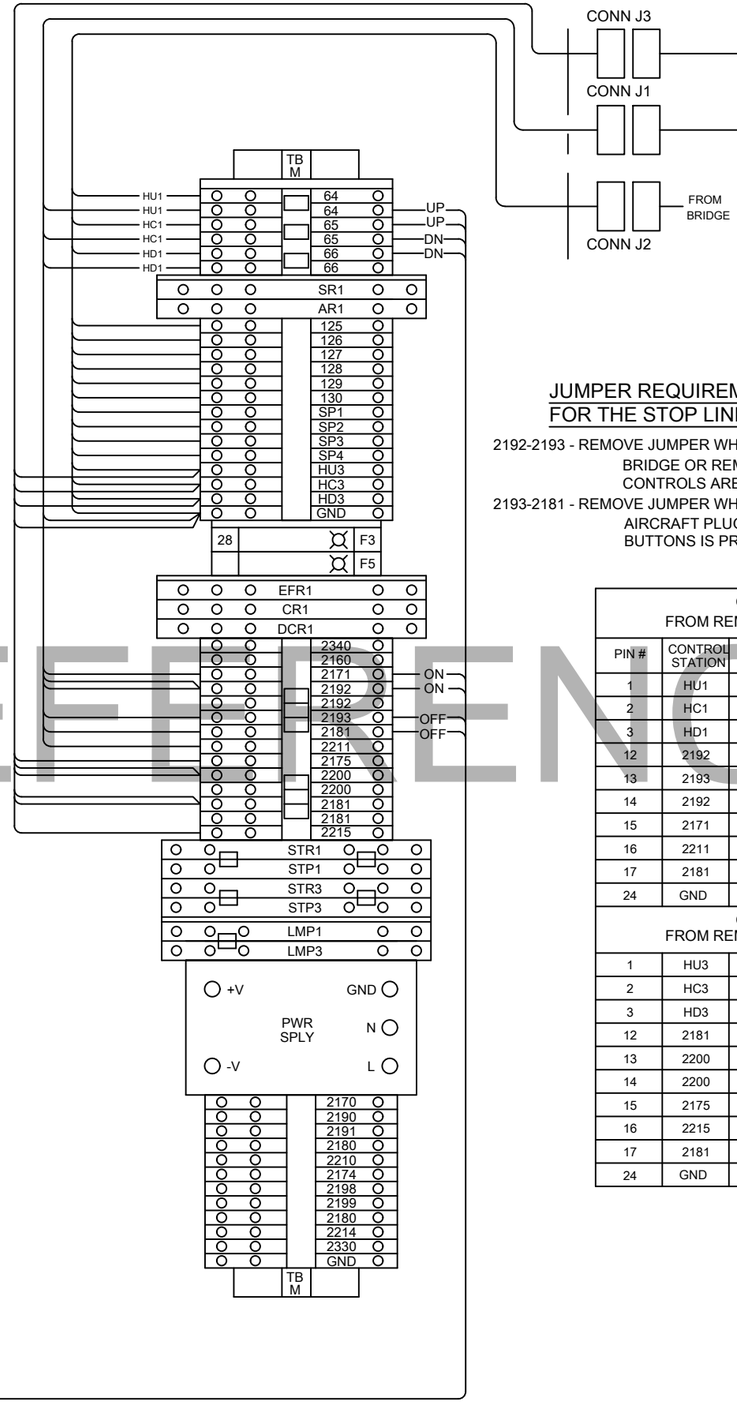

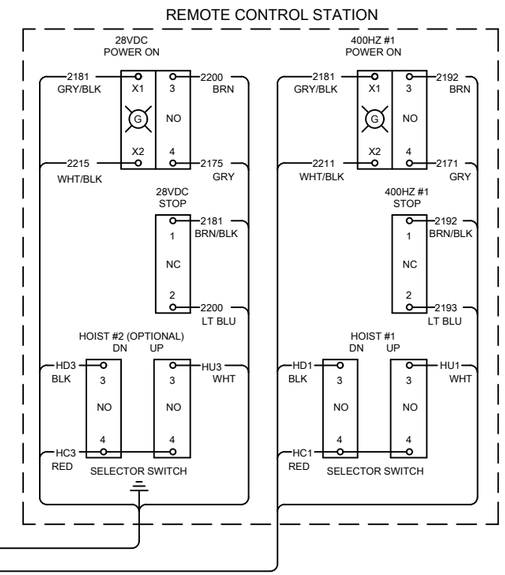

JUMPER REQUIREMENT FOR THE STOP LINE:

2192-2193 - REMOVE JUMPER WHEN BRIDGE OR REMOTE CONTROLS ARE PRESENT

2193-2181 - REMOVE JUMPER WHEN AIRCRAFT PLUG WITH 4 PUSH BUTTONS IS PRESENT

CONNECTOR J1 FROM REMOTE CONTROL STATION				CONNECTOR J2 FOR BRIDGE INTERFACE			
PIN #	CONTROL STATION	400HZ TBM	FUNCTION	BRIDGE	400HZ TBM	PIN #	FUNCTION
1	HU1	HU1	HOIST-UP #1	64	HU1	1	HOIST-UP #1
2	HC1	HC1	HOIST-COMMON #1	65	HC1	2	HOIST-COMMON #1
3	HD1	HD1	HOIST-DN #1	66	HD1	3	HOIST-DN #1
12	2192	2192	STOP-PB #1	-	-	4	-
13	2193	2193	STOP-PB #1	-	-	5	-
14	2192	2192	START-PB #1	-	-	6	-
15	2171	2171	START-PB #1		125	7	"S" RELAY (N/O)
16	2211	2211	SWITCHED-NEG-LAMP #1		126	8	"S" RELAY (WIPER)
17	2181	2181	+24VDC-LAMP #1		127	9	"S" RELAY (N/C)
24	GND	GND	GROUND		128	10	"A" RELAY (N/C)
CONNECTOR J3 FROM REMOTE CONTROL STATION					129	11	"A" RELAY (WIPER)
					130	12	"A" RELAY (N/O)
1	HU3	HU3	HOIST-UP #2	SP1	SP1	17	SP1
2	HC3	HC3	HOIST-COMMON #2	SP2	SP2	18	SP2
3	HD3	HD3	HOIST-DN #2	SP3	SP3	19	SP3
12	2181	2181	STOP-PB #2	SP4	SP4	20	SP4
13	2200	2200	STOP-PB #2	SP5	SP5	21	SP5
14	2200	2200	START-PB #2	SP6	SP6	22	SP6
15	2175	2175	START-PB #2	SP7	SP7	23	SP7
16	2215	2215	SWITCHED-NEG-LAMP #2	GND	GND	24	GROUND
17	2181	2181	+24VDC-LAMP #2				
24	GND	GND	GROUND				

CUSTOMER CONNECTIONS

UNLESS OTHERWISE SPECIFIED
ANG ±1° FRACTIONAL ±1/16
2 PL ±.06 3 PL ±.030
HOLES & SLOTS ±.015
MM 0 PL ±1.5 1 PL ±.75
INTERPRET DIM AND TOL PER
ASME Y14.5-2009

THIRD ANGLE PROJECTION

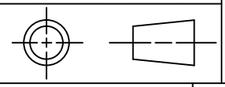

DRFTR CAM 2021/02/02
CHKD - -
APVD MLF 2021/02/02

THIS DOCUMENT CONTAINS INFORMATION THAT IS PROPRIETARY AND CONFIDENTIAL TO JOHN BEAN TECHNOLOGIES CORPORATION AND ITS AFFILIATES, AND MAY NOT BE PUBLICLY DISCLOSED WITHOUT THE EXPRESS WRITTEN PERMISSION OF JOHN BEAN TECHNOLOGIES CORPORATION. UNDER ANY U.S. GOVERNMENT PRIME CONTRACT THIS INFORMATION SHALL BE CONSIDERED TO BE "LIMITED RIGHTS DATA".
© 2021 JBT

Jetway® Systems
Ogden, UT, U.S.A.

TITLE
SUBMITTAL : 400 HZ
ERIE INT'L AIRPORT (ERI)

SIZE	CAGE CODE	DWG NO.	REV
D	54077	FAZ-ERI_J	A

SCALE: NONE
WEIGHT: LB: - KG: -
SHEET 10 OF 17
AUTOCAD

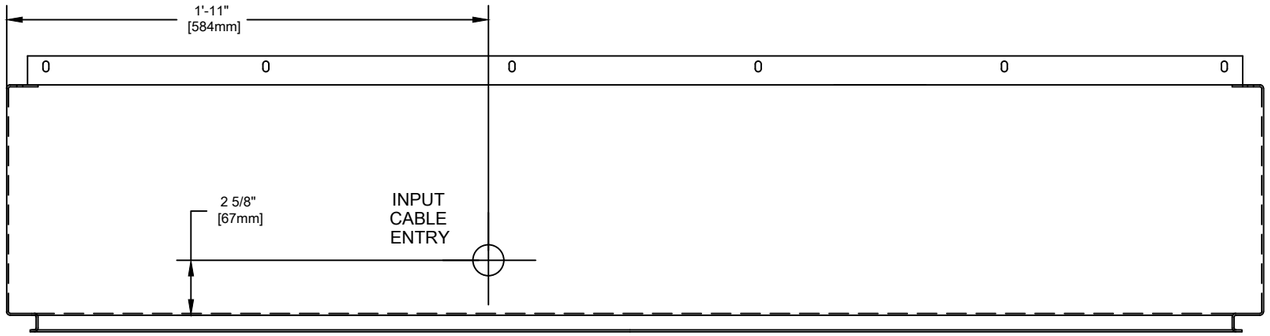

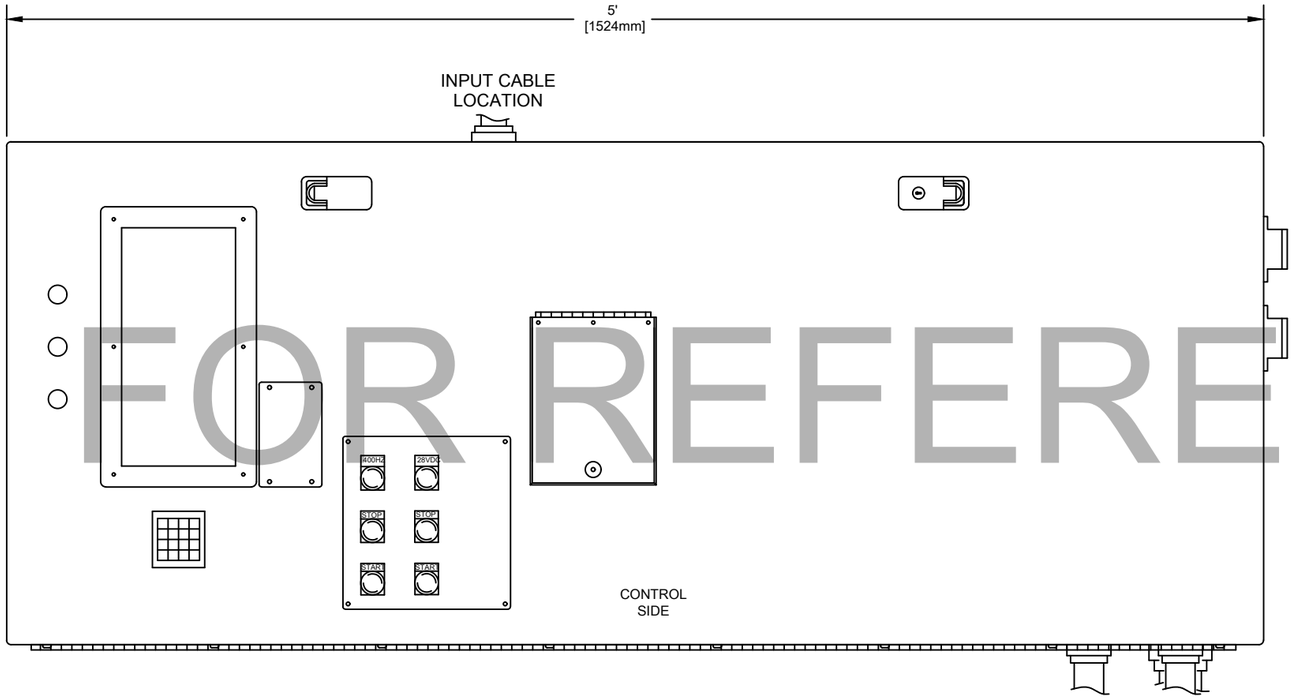

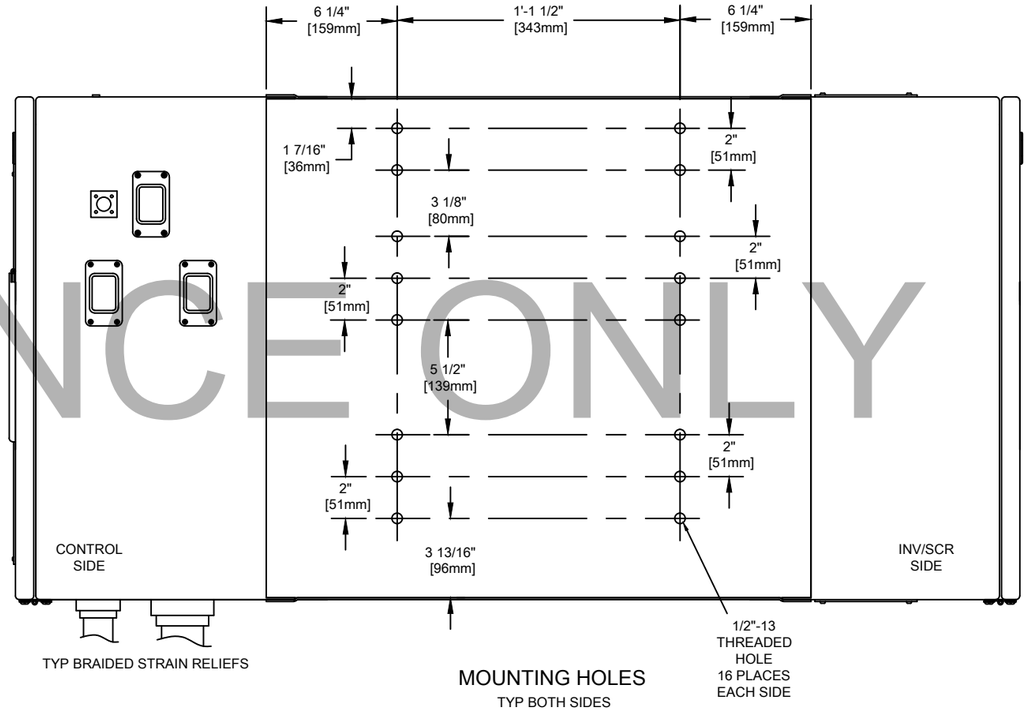

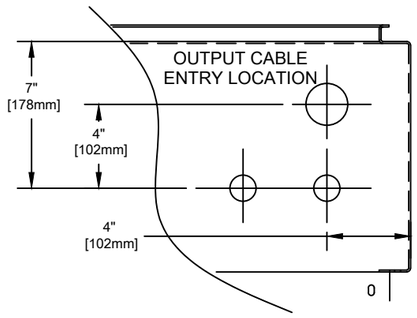

FOR REFERENCE ONLY

FIELD REF

UNLESS OTHERWISE SPECIFIED
ANG ±1° FRACTIONAL ±1/16
2 PL ±.06 3 PL ±.030
HOLES & SLOTS ±.015
MM 0 PL ±1.5 1 PL ±.75
INTERPRET DIM AND TOL PER
ASME Y14.5-2009
THIRD ANGLE PROJECTION

DRFTR	CAM	2021/02/02
CHKD	-	-
APVD	MLF	2021/02/02

THIS DOCUMENT CONTAINS INFORMATION THAT IS PROPRIETARY AND CONFIDENTIAL TO JOHN BEAN TECHNOLOGIES CORPORATION AND ITS AFFILIATES, AND MAY NOT BE PUBLICLY DISCLOSED WITHOUT THE EXPRESS WRITTEN PERMISSION OF JOHN BEAN TECHNOLOGIES CORPORATION. UNDER ANY U.S. GOVERNMENT PRIME CONTRACT THIS INFORMATION SHALL BE CONSIDERED TO BE "LIMITED RIGHTS DATA".
© 2021 JBT

Jetway® Systems
Ogden, UT, U.S.A.

TITLE
SUBMITTAL : 400 HZ
ERIE INT'L AIRPORT (ERI)

SIZE	CAGE CODE	DWG NO.	REV
D	54077	FAZ-ERI_J	A

SCALE: NONE
WEIGHT: LB: - KG: -
SHEET 11 OF 17
AUTOCAD

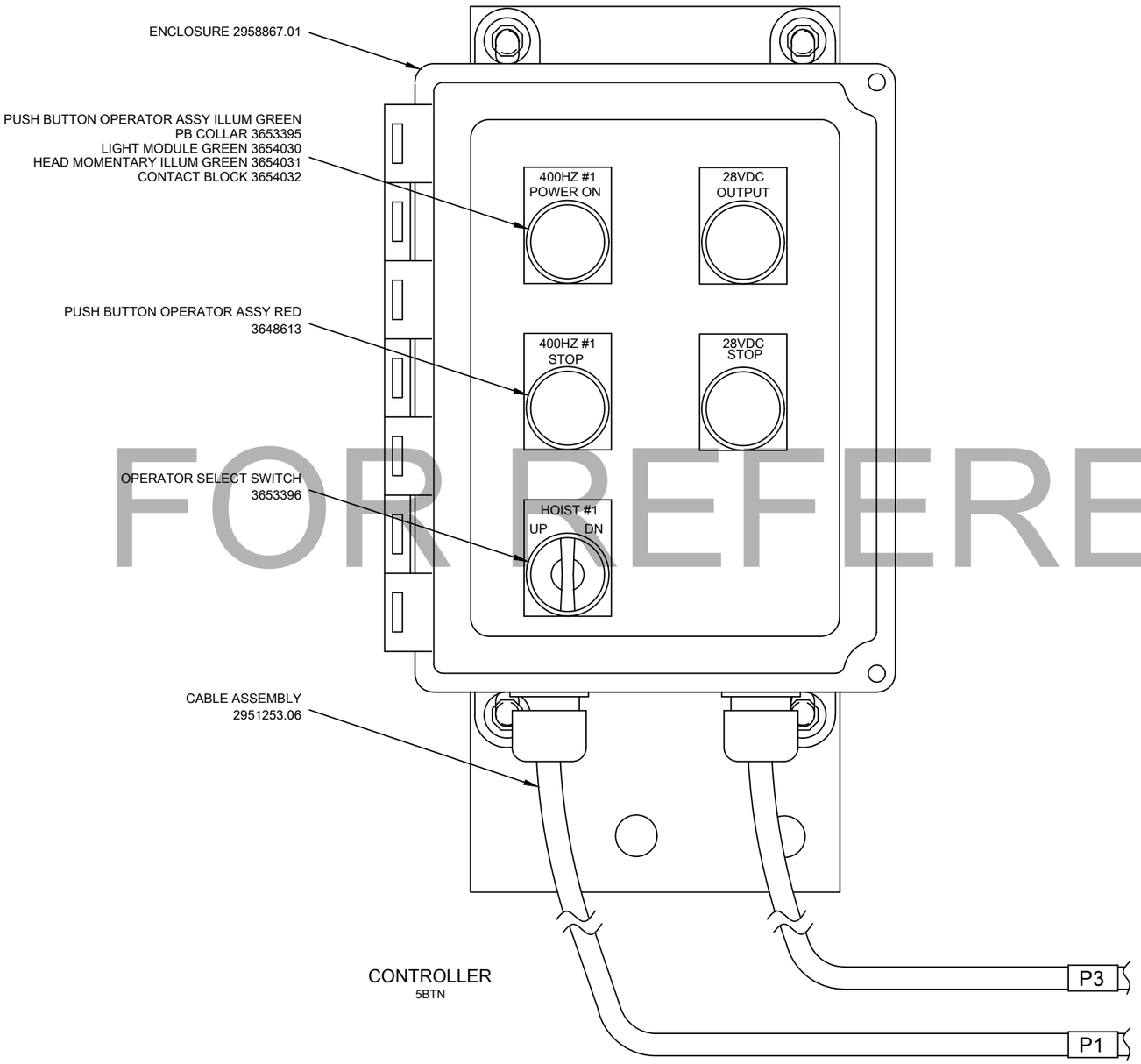

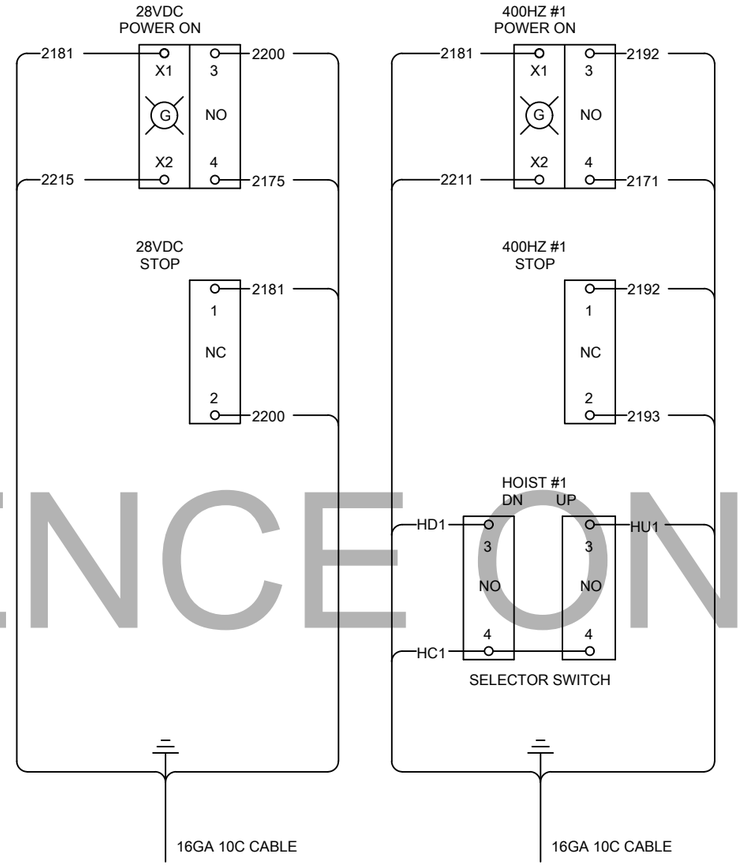

WIRING DIAGRAM
(REAR VIEW OF COVER)

FOR REFERENCE ONLY

PUSH BUTTON CONTROL STATION

UNLESS OTHERWISE SPECIFIED
ANG ±1° FRACTIONAL ±1/16
2 PL ±.06 3 PL ±.030
HOLES & SLOTS ±.015
MM 0 PL ±1.5 1 PL ±.75
INTERPRET DIM AND TOL PER
ASME Y14.5-2009
THIRD ANGLE PROJECTION

DRFTR CAM DATE 2021/02/02
CHKD - DATE -
APVD MLF DATE 2021/02/02

THIS DOCUMENT CONTAINS INFORMATION THAT IS PROPRIETARY AND CONFIDENTIAL TO JOHN BEAN TECHNOLOGIES CORPORATION AND ITS AFFILIATES, AND MAY NOT BE PUBLICLY DISCLOSED WITHOUT THE EXPRESS WRITTEN PERMISSION OF JOHN BEAN TECHNOLOGIES CORPORATION. UNDER ANY U.S. GOVERNMENT PRIME CONTRACT THIS INFORMATION SHALL BE CONSIDERED TO BE "LIMITED RIGHTS DATA".
© 2021 JBT

Jetway® Systems
Ogden, UT, U.S.A.

TITLE
SUBMITTAL : 400 HZ
ERIE INT'L AIRPORT (ERI)

SIZE	CAGE CODE	DWG NO.	REV
D	54077	FAZ-ERI_J	A

SCALE: NONE | WEIGHT: LB: - KG: - | SHEET 12 OF 17

AUTOCAD

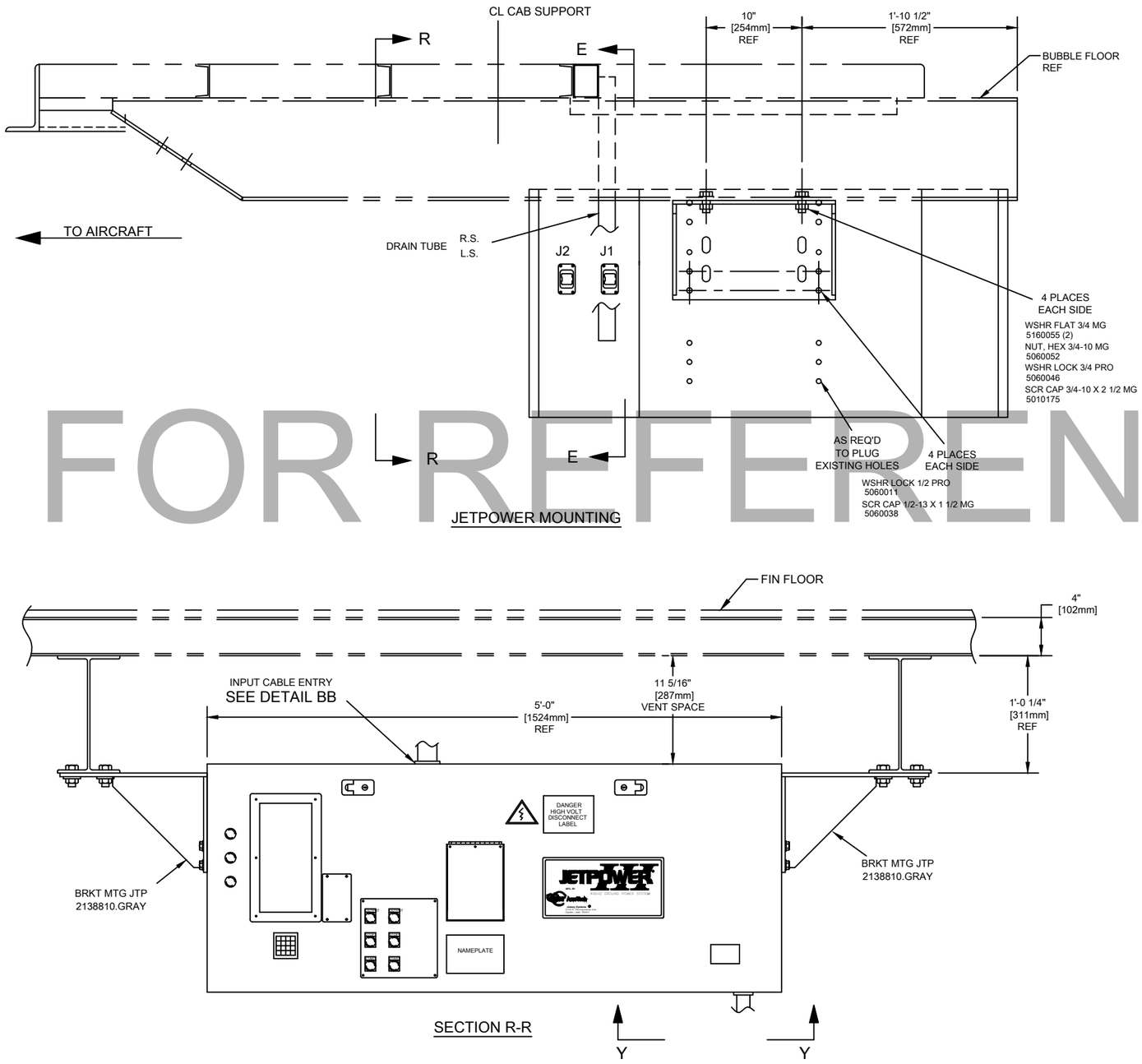

JETPOWER MOUNTING

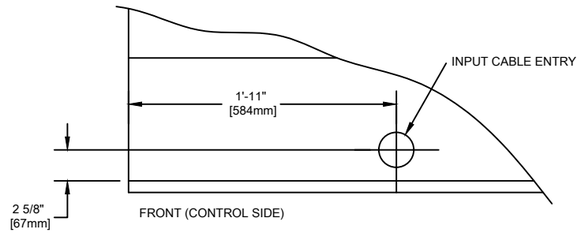

DETAIL BB
INPUT CABLE ENTRY

FOR REFERENCE ONLY

SECTION R-R

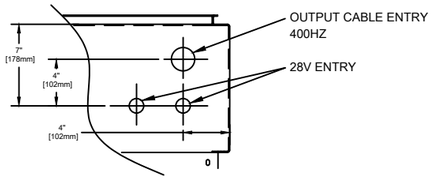

VIEW Y-Y
OUTPUT CABLE ENTRY

FIELD INSTALL

UNLESS OTHERWISE SPECIFIED
ANG ±1° FRACTIONAL ±1/16
2 PL ±.06 3 PL ±.030
HOLES & SLOTS ±.015
MM 0 PL ±1.5 1 PL ±.75
INTERPRET DIM AND TOL PER
ASME Y14.5-2009

THIRD ANGLE PROJECTION

DRFTR	CAM	DATE 2021/02/02
CHKD	-	DATE -
APVD	MLF	DATE 2021/02/02

THIS DOCUMENT CONTAINS INFORMATION THAT IS PROPRIETARY AND CONFIDENTIAL TO JOHN BEAN TECHNOLOGIES CORPORATION AND ITS AFFILIATES, AND MAY NOT BE PUBLICLY DISCLOSED WITHOUT THE EXPRESS WRITTEN PERMISSION OF JOHN BEAN TECHNOLOGIES CORPORATION. UNDER ANY U.S. GOVERNMENT PRIME CONTRACT THIS INFORMATION SHALL BE CONSIDERED TO BE "LIMITED RIGHTS DATA".
© 2021 JBT

Jetway® Systems
Ogden, UT, U.S.A.

TITLE
SUBMITTAL : 400 HZ
ERIE INT'L AIRPORT (ERI)

SIZE	CAGE CODE	DWG NO.	REV
D	54077	FAZ-ERI_J	A

SCALE: NONE | WEIGHT: LB: - KG: - | SHEET 13 OF 17

AUTOCAD

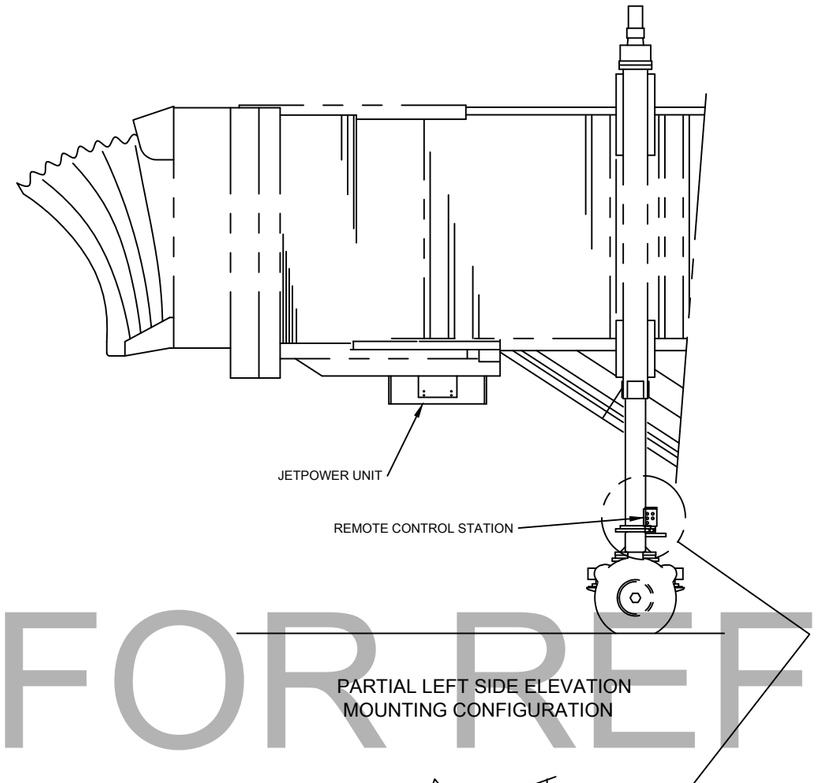

PARTIAL LEFT SIDE ELEVATION
MOUNTING CONFIGURATION

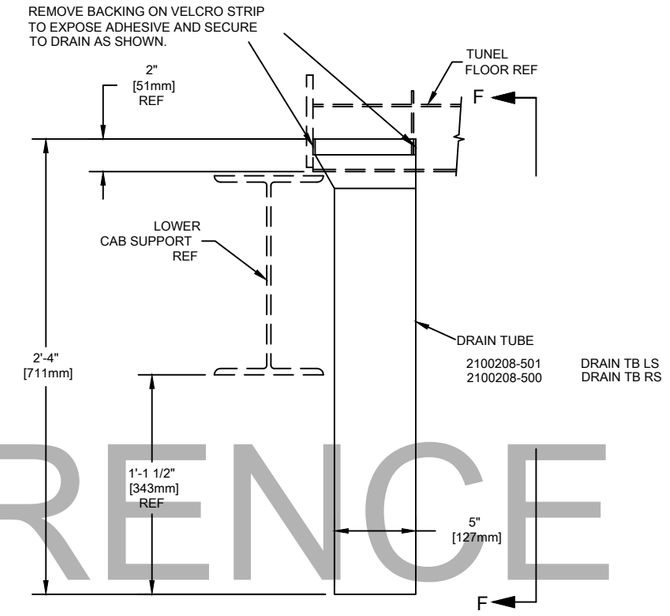

SECTION E-E A2 & A3

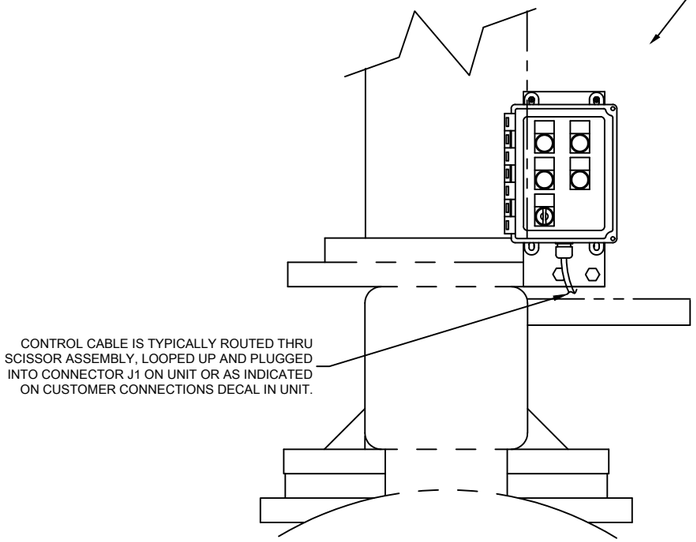

TYP CONTROL STATION MTG.

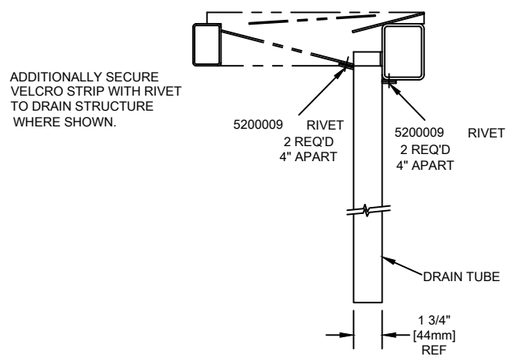

VIEW F-F

FIELD INSTALL

UNLESS OTHERWISE SPECIFIED
ANG ±1° FRACTIONAL ±1/16
2 PL ±.06 3 PL ±.030
HOLES & SLOTS ±.015
MM 0 PL ±1.5 1 PL ±.75
INTERPRET DIM AND TOL PER
ASME Y14.5-2009

THIRD ANGLE PROJECTION

DRFTR	CAM	DATE	2021/02/02
CHKD	-	DATE	-
APVD	MLF	DATE	2021/02/02

THIS DOCUMENT CONTAINS INFORMATION THAT IS PROPRIETARY AND CONFIDENTIAL TO JOHN BEAN TECHNOLOGIES CORPORATION AND ITS AFFILIATES, AND MAY NOT BE PUBLICLY DISCLOSED WITHOUT THE EXPRESS WRITTEN PERMISSION OF JOHN BEAN TECHNOLOGIES CORPORATION. UNDER ANY U.S. GOVERNMENT PRIME CONTRACT THIS INFORMATION SHALL BE CONSIDERED TO BE "LIMITED RIGHTS DATA".
© 2021 JBT

Jetway® Systems
Ogden, UT, U.S.A.

TITLE
SUBMITTAL : 400 HZ
ERIE INT'L AIRPORT (ERI)

SIZE	CAGE CODE	DWG NO.	REV
D	54077	FAZ-ERI_J	A

SCALE: NONE | WEIGHT: LB: - KG: - | SHEET 14 OF 17

AUTOCAD

FOR REFERENCE ONLY

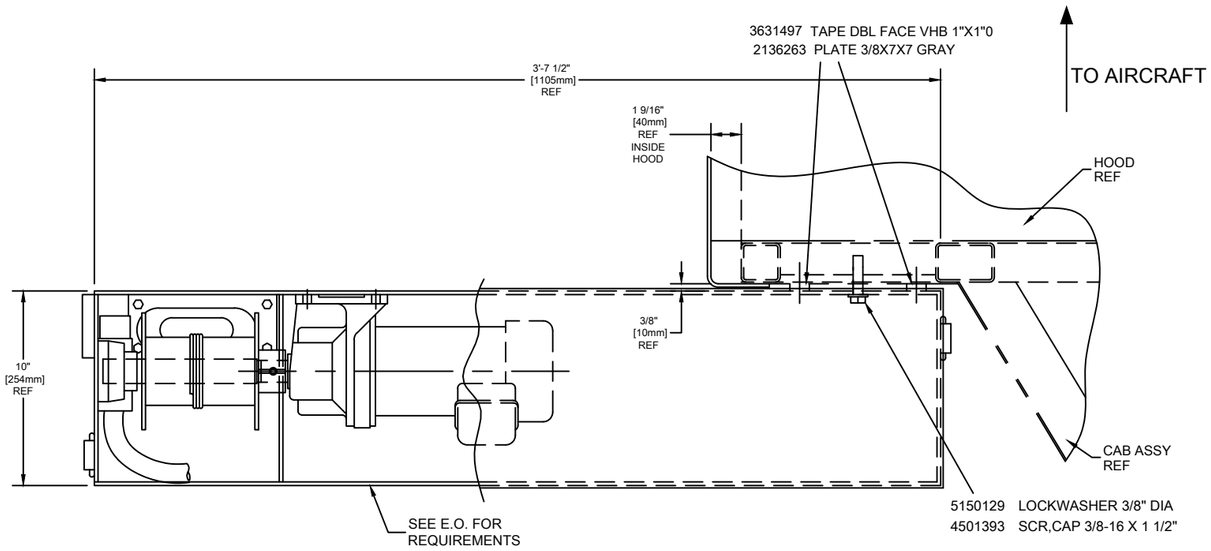

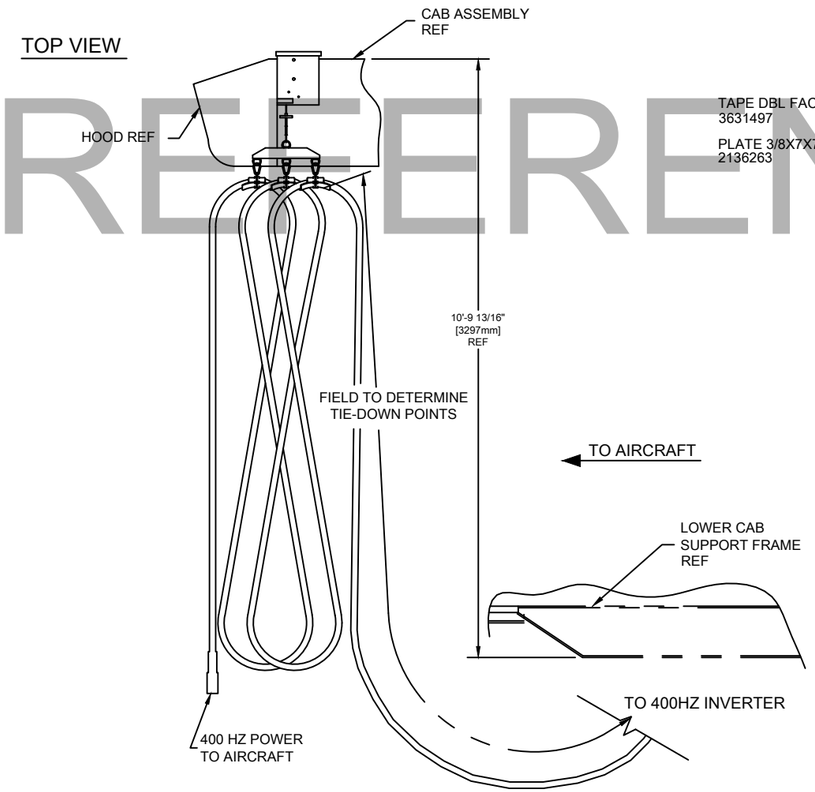

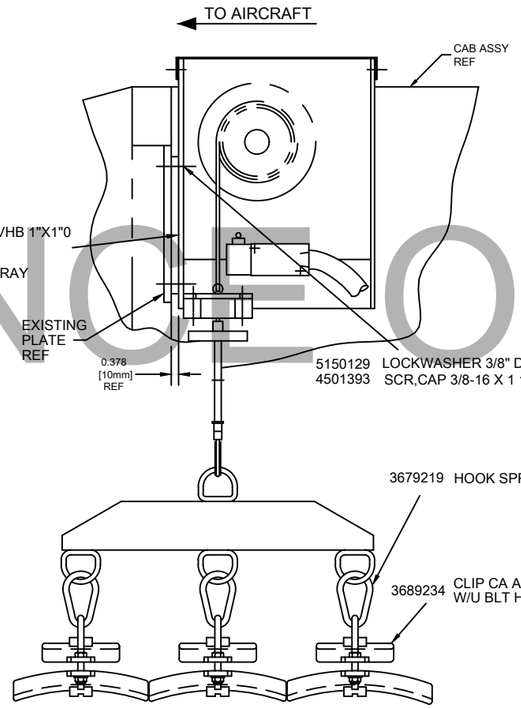

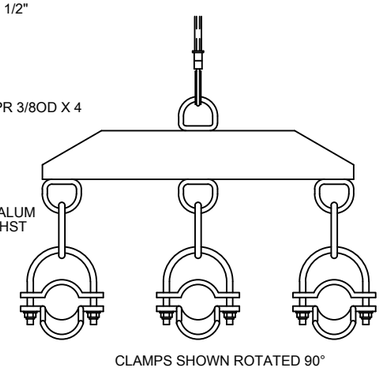

FOR REFERENCE ONLY

HOIST FIELD INSTALL CAB

UNLESS OTHERWISE SPECIFIED
ANG ±1° FRACTIONAL ±1/16
2 PL ±.06 3 PL ±.030
HOLES & SLOTS ±.015
MM 0 PL ±1.5 1 PL ±.75
INTERPRET DIM AND TOL PER
ASME Y14.5-2009
THIRD ANGLE PROJECTION

DRFTR	CAM	DATE 2021/02/02
CHKD	-	DATE -
APVD	MLF	DATE 2021/02/02

THIS DOCUMENT CONTAINS INFORMATION THAT IS PROPRIETARY AND CONFIDENTIAL TO JOHN BEAN TECHNOLOGIES CORPORATION AND ITS AFFILIATES, AND MAY NOT BE PUBLICLY DISCLOSED WITHOUT THE EXPRESS WRITTEN PERMISSION OF JOHN BEAN TECHNOLOGIES CORPORATION. UNDER ANY U.S. GOVERNMENT PRIME CONTRACT THIS INFORMATION SHALL BE CONSIDERED TO BE "LIMITED RIGHTS DATA".
© 2021 JBT

Jetway® Systems
Ogden, UT, U.S.A.

TITLE
SUBMITTAL : 400 HZ
ERIE INT'L AIRPORT (ERI)

SIZE	CAGE CODE	DWG NO.	REV
D	54077	FAZ-ERI_J	A

SCALE: NONE | WEIGHT: LB: - KG: - | SHEET 15 OF 17

AUTOCAD

FOR REFERENCE ONLY

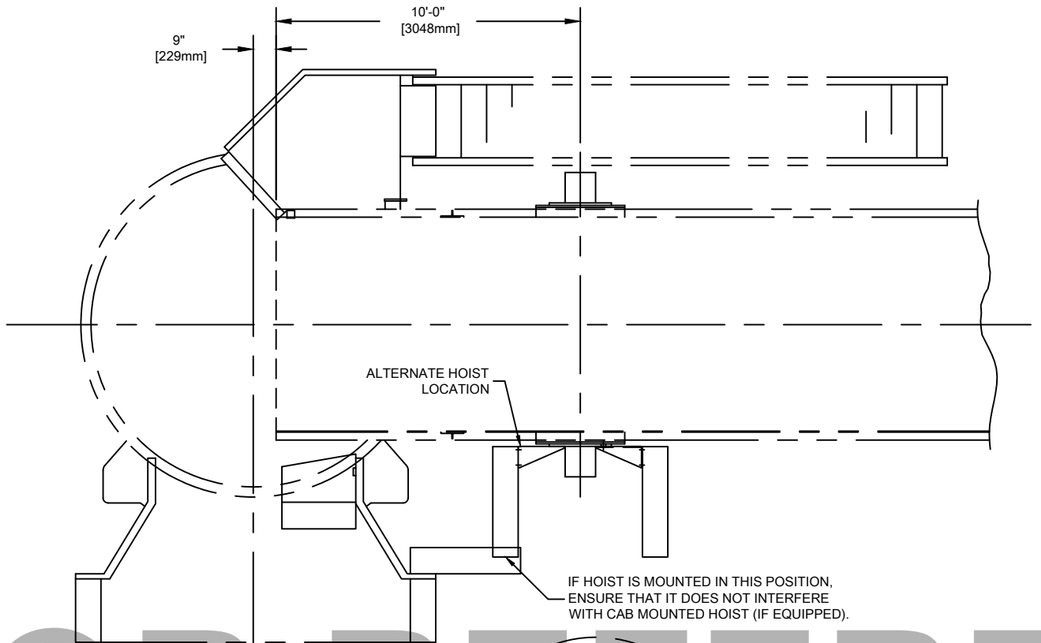

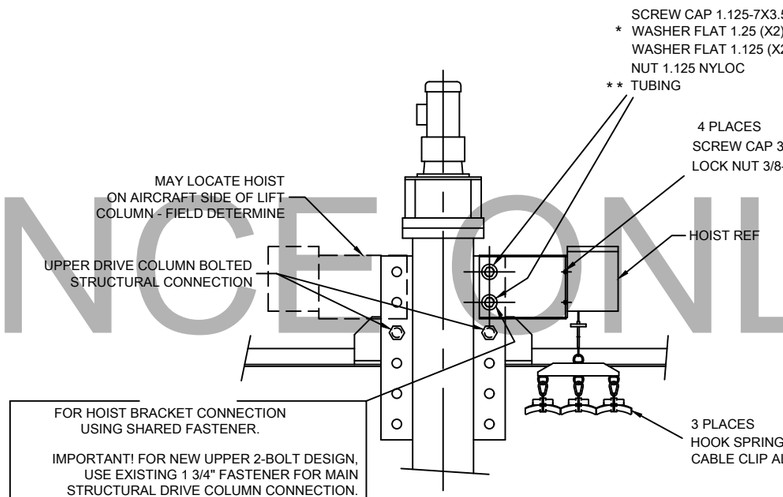

	SCREW CAP 1.125-7X3.5 HEX	5060021
*	WASHER FLAT 1.25 (X2)	601780
	WASHER FLAT 1.125 (X2)	5150105
	NUT 1.125 NYLOC	5250135
* *	TUBING	3718097

4 PLACES

SCREW CAP 3/8-16X 1.25 HEX	4501051
LOCK NUT 3/8-16 NYL	5250227

FOR HOIST BRACKET CONNECTION
USING SHARED FASTENER.

IMPORTANT! FOR NEW UPPER 2-BOLT DESIGN,
USE EXISTING 1 3/4" FASTENER FOR MAIN
STRUCTURAL DRIVE COLUMN CONNECTION.
DISCARD 1 1/8" FASTENER SUPPLIED IN KIT.

DETAIL A

* USE EITHER 1 1/4" WIDE OR 1 1/8" REGULAR FLAT WASHERS
DEPENDING ON HOLE SIZE OF DRIVE COLUMN MOUNTING PLATE.

* * USE TUBING AS A BUSHING IN DRIVE COLUMNS WITH 1 3/4" DIAMETER HOLES.
DISCARD ON INSTALLATIONS WITH 1 1/8" DIAMETER HOLES.

HOIST FIELD INSTALLTUNNEL

UNLESS OTHERWISE SPECIFIED
ANG ±1° FRACTIONAL ±1/16
2 PL ±.06 3 PL ±.030
HOLES & SLOTS ±.015
MM 0 PL ±1.5 1 PL ±.75
INTERPRET DIM AND TOL PER
ASME Y14.5-2009

THIRD ANGLE PROJECTION

DRFTR	CAM	DATE: 2021/02/02
CHKD	-	DATE: -
APVD	MLF	DATE: 2021/02/02

THIS DOCUMENT CONTAINS
INFORMATION THAT IS
PROPRIETARY AND CONFIDENTIAL
TO JOHN BEAN TECHNOLOGIES
CORPORATION AND ITS AFFILIATES,
AND MAY NOT BE PUBLICLY
DISCLOSED WITHOUT THE EXPRESS
WRITTEN PERMISSION OF JOHN BEAN
TECHNOLOGIES CORPORATION.
UNDER ANY U.S. GOVERNMENT PRIME
CONTRACT THIS INFORMATION SHALL
BE CONSIDERED TO BE
"LIMITED RIGHTS DATA".
© 2021 JBT

Jetway©Systems
Ogden, UT, U.S.A.

TITLE
SUBMITTAL : 400 HZ
ERIE INT'L AIRPORT (ERI)

SIZE	CAGE CODE	DWG NO.	REV
D	54077	FAZ-ERI_J	A

SCALE: NONE | WEIGHT: LB: - KG: - | SHEET 16 OF 17

AUTOCAD

400HZ AIRCRAFT CABLE
PN 3734342.060

AIRCRAFT CABLE, 400HZ, JACKETED
260 AMPS, 3 PHASE
2 #4 PER PHASE, 1 #1 NEUTRAL
#18 AWG CONTROL WIRES (FOUR GROUPS OF THREE WIRES
AND TWO GROUPS OF TWO WIRES)
E & F WIRED.
THE OTHER END TEMINATED WITH RING LUGS.
APX WEIGHT 148 POUNDS.
THERMAL PROTECTION AND LOST NEUTRAL PROTECTION.
REPLACEABLE THERMAL HARDNOSE.
AIRCRAFT CONNECTOR MOLDED ONTO AIRCRAFT 2X4GA CABLE.
CABLE DIAMETER 1.65”
CABLE LENGTH 60 FEET.
NO BUTTONS IN CABLE HEAD.
AIRCRAFT CABLE BULK PART NUMBER 3734341.
REPLACEABLE THERMALLY PROTECTED NOSE 3731862.

IMAGES FOR REFERENCE ONLY

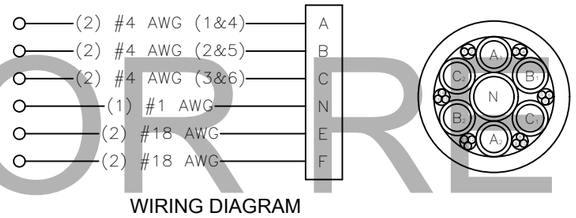

WIRING DIAGRAM

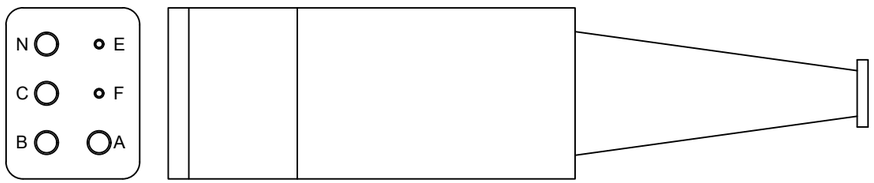

28V AIRCRAFT CABLE
PN 3725284.050

AIRCRAFT CABLE, 28VDC, BANDED
THIS CABLE WILL INCLUDE TWO EACH 4/0 CABLES.
ONE END IS TO BE MARKED WITH (+) AND HAVE A 3/8 INCH RING LUG.
THE OTHER END IS TO BE MARKED WITH (-) AND HAVE A 1/2 INCH RING LUG.
BOTH CABLES WILL BE TERMINATED INTO AN AIRCRAFT PLUG.
THE CABLE IS TO BE BANDED TOGETHER WITH NON-METALIC BAND.
THIS CABLE IS TO BE 50 FEET LONG AND MEET
OR EXCEED MIL-C-5756 AND MS2588.
REFERENCE FIELD REPLACEABLE CONNECTOR PN 3725283

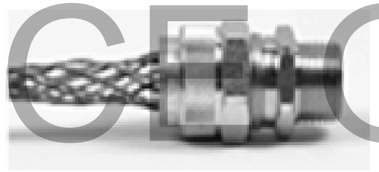

MESH GRIPS ON EACH AIRCRAFT CABLE

FOR REFERENCE ONLY

AIRCRAFT CABLES

UNLESS OTHERWISE SPECIFIED
ANG ±1° FRACTIONAL ±1/16
2 PL ±.06 3 PL ±.030
HOLES & SLOTS ±.015
MM 0 PL ±1.5 1 PL ±.75
INTERPRET DIM AND TOL PER
ASME Y14.5-2009
THIRD ANGLE PROJECTION

DRFTR	CAM	2021/02/02
CHKD	-	-
APVD	MLF	2021/02/02

THIS DOCUMENT CONTAINS INFORMATION THAT IS PROPRIETARY AND CONFIDENTIAL TO JOHN BEAN TECHNOLOGIES CORPORATION AND ITS AFFILIATES, AND MAY NOT BE PUBLICLY DISCLOSED WITHOUT THE EXPRESS WRITTEN PERMISSION OF JOHN BEAN TECHNOLOGIES CORPORATION. UNDER ANY U.S. GOVERNMENT PRIME CONTRACT THIS INFORMATION SHALL BE CONSIDERED TO BE "LIMITED RIGHTS DATA".
© 2021 JBT

Jetway® Systems
Ogden, UT, U.S.A.

TITLE
SUBMITTAL : 400 HZ
ERIE INT'L AIRPORT (ERI)

SIZE	CAGE CODE	DWG NO.	REV
D	54077	FAZ-ERI_J	A

SCALE: NONE | WEIGHT: LB: - KG: - | SHEET 17 OF 17

AUTOCAD

SECTION 011000 - SUMMARY

1.1 RELATED DOCUMENTS

A. Drawings and general provisions of the Contract, including General and Supplementary Conditions and other Division 01 Specification Sections, apply to this Section.

1.2 SUMMARY

A. Section Includes:

1. Project information.
2. Work covered by Contract Documents.
3. Phased construction.
4. Work by Owner.
5. Work under separate contracts.
6. Future work.
7. Purchase contracts.
8. Owner-furnished products.
9. Contractor-furnished, Owner-installed products.
10. Access to site.
11. Coordination with occupants.
12. Work restrictions.
13. Specification and Drawing conventions.
14. Miscellaneous provisions.

B. Related Requirements:

1. Section 015000 "Temporary Facilities and Controls" for limitations and procedures governing temporary use of Owner's facilities.

1.3 PROJECT INFORMATION

A. Project Identification: Erie International Airport, Terminal Building, Passenger Boarding Bridge - Gate 3.

1. Project Location: 4411 West 12th Street, Erie, PA 16505-3091

B. Owner: Erie International Airport Authority.

1. Owner's Representative: Derek V. Martin, Executive Director

C. Architect: KTH Architects, Inc.

D. Airport Engineer: Mead & Hunt

E. Architect's Consultants: Architect has retained the following design professionals who have prepared designated portions of the Contract Documents:

1. Pyramid Engineering, PC

F. Other Owner Consultants: Owner has retained the following design professionals who have prepared designated portions of the Contract Documents:

1. Mead & Hunt has prepared the following portions of the Contract Documents:

a. Civil and Structural Engineering.

1.4 WORK COVERED BY CONTRACT DOCUMENTS

A. The Work of Project is defined by the Contract Documents and consists of the following:

1. Preparation of Gate 3 to receive a new passenger boarding bridge (PBB).
2. Work included new electric feeds, main panel replacement and electric disconnect for the new bridge equipment.
3. A new wall and gate door is included in the work as well as concrete foundations for support of the new bridge equipment and ramp tunnels.

B. Building Permit: Code submission & Fee payments to obtain a building permit will be by Contractor as an allowance.

C. Door security control and security camera installation will be by Contractor as an allowance.

D. Ticketing Podium be furnished and installed by Contractor as an allowance.

E. Type of Contract:

1. Project will be constructed under coordinated, concurrent multiple contracts. See Section 011200 "Multiple Contract Summary" for a description of work included under each of the multiple contracts and for the responsibilities of Project coordinator. Contracts for this Project include the following:

a. General Construction
b. Electrical

1.5 WORK BY OWNER

A. General: Cooperate fully with Owner so work may be carried out smoothly, without interfering with or delaying work under this Contract or work by Owner. Coordinate the Work of this Contract with work performed by Owner.

B. Concurrent Work: Owner will perform the following construction operations at Project site. Those operations will be conducted simultaneously with Work under this Contract.

1. Telephone system installation and re-configuration.
2. Purchase and installation of new passenger boarding bridge equipment.

C. Subsequent Work: Owner will perform the following additional work at site after Substantial Completion. Completion of that work will depend on successful completion of preparatory Work under this Contract.

1. Interior directional signage.

D. Concurrent Work: Owner will award separate contract(s) for the following construction operations at Project site. Those operations will be conducted simultaneously with work under this Contract.

1. Passenger boarding bridge equipment.
2. Aircraft apron line painting.

1.6 ACCESS TO SITE

A. General: Each Contractor shall have limited use of Project site for construction operations as indicated on Drawings by the Contract limits and as indicated by requirements of this Section.

B. Use of Site: Limit use of Project site to areas within the Contract limits indicated. Do not disturb portions of Project site beyond areas in which the Work is indicated.

1. Limits: Confine construction operations to the scope of work associated with the building addition and renovated areas.
2. Driveways, Walkways, and Entrances: Keep driveways parking garage, loading areas, and entrances serving premises clear and available to Owner, Owner's employees, and emergency vehicles at all times. Do not use these areas for parking or for storage of materials.

    a. Schedule deliveries to minimize use of driveways and entrances by construction operations.
    b. Schedule deliveries to minimize space and time requirements for storage of materials and equipment on-site.

C. Condition of Existing Building: Maintain portions of existing building affected by construction operations in a weathertight condition throughout construction period. Repair damage caused by construction operations.

D. Condition of Existing Grounds: Maintain portions of existing grounds, landscaping, and hardscaping affected by construction operations throughout construction period. Repair damage caused by construction operations.

1.7 COORDINATION WITH OCCUPANTS

A. Partial Owner Occupancy: Owner will occupy the premises during entire construction period, except for areas under construction. Cooperate with Owner during construction operations to minimize conflicts and facilitate Owner usage. Perform the Work so as not to interfere with Owner's operations. Maintain existing exits unless otherwise indicated.

1. Maintain access to existing walkways, corridors, and other adjacent occupied or used facilities. Do not close or obstruct walkways, corridors, or other occupied or used facilities without written permission from Owner and authorities having authority.
2. Provide not less than 72-hour notice to Owner of activities that will affect Owner's operations.

1.8 WORK RESTRICTIONS

A. Work Restrictions, General: Comply with restrictions on construction operations.

1. Comply with limitations on use of public streets and secure apron areas and with other requirements of authorities having authority including FAA and Penn Dot BOA.

B. On-Site Work Hours: Limit work in the existing building to normal business working hours of 6 a.m. to 5 p.m., Monday through Friday, unless otherwise indicated.

1. Weekend Hours: Shall be coordinated with the Owner and Airline tenants.
2. Hours for Utility Shutdowns: Shall be coordinated with the Owner.

C. Existing Utility Interruptions: Do not interrupt utilities serving facilities occupied by Owner or others unless permitted under the following conditions and then only after providing temporary utility services per requirements indicated:

1. Notify the Airport Engineer not less than two days in advance of proposed utility interruptions.
2. Obtain Owner's written permission before proceeding with utility interruptions.

D. Noise, Vibration, and Odors: Coordinate operations that may result in high levels of noise and vibration, odors, or other disruption to Owner occupancy with Owner.

1. Notify Owner not less than two days in advance of proposed disruptive operations.
2. Obtain Owner's written permission before proceeding with disruptive operations.

E. Restricted Substances: Use of tobacco products and other controlled substances within the existing building is not permitted.

F. Employee Identification: Owner will provide identification tags for Contractor personnel working on Project site. Require personnel to use identification tags at all times.

G. Employee Screening: Comply with Owner's requirements for background screening of Contractor personnel working on Project site.

1. Maintain list of approved screened personnel with Owner's representative.

1.9 SPECIFICATION AND DRAWING CONVENTIONS

A. Specification Content: The Specifications use certain conventions for the style of language and the intended meaning of certain terms, words, and phrases when used in particular situations. These conventions are as follows:

1. Imperative mood and streamlined language are generally used in the Specifications. The words "shall," "shall be," or "shall comply with," depending on the context, are implied where a colon (:) is used within a sentence or phrase.
2. Specification requirements are to be performed by Contractor unless specifically stated otherwise.

B. Division 01 General Requirements: Requirements of Sections in Division 01 apply to the Work of all Sections in the Specifications.

C. Drawing Coordination: Requirements for materials and products identified on Drawings are described in detail in the Specifications. One or more of the following are used on Drawings to identify materials and products:

1. Terminology: Materials and products are identified by the typical generic terms used in the individual Specifications Sections.
2. Abbreviations: Materials and products are identified by abbreviations published as part of the U.S. National CAD Standard and scheduled on Drawings.
3. Keynoting: Materials and products are identified by reference keynotes referencing Specification Section numbers found in this Project Manual.

1.10 MISCELLANEOUS PROVISIONS

A. Refer to front end documents for additional information and restrictions for construction occurring at Airports.

PART 2 - PRODUCTS (Not Used)

PART 3 - EXECUTION (Not Used)

END OF SECTION 011000

This page intentionally left blank.

SECTION 011200 - MULTIPLE CONTRACT SUMMARY

PART 1 - GENERAL

1.1 RELATED DOCUMENTS

A. Drawings and general provisions of the Contract, including General and Supplementary Conditions and other Division 01 Specification Sections, apply to this Section.

1.2 SUMMARY

A. Section includes a summary of each contract, including responsibilities for coordination and temporary facilities and controls.

B. Specific requirements for Work of each contract are also indicated in individual Specification Sections and on Drawings.

C. Related Requirements:

1. Section 011000 "Summary" for the Work covered by the Contract Documents, restrictions on use of Project site, phased construction, coordination with occupants, and work restrictions.
2. Section 013100 "Project Management and Coordination" for general coordination requirements.

1.3 DEFINITIONS

A. Permanent Enclosure: As determined by Architect, the condition at which roofing is insulated and weathertight; exterior walls are insulated and weathertight; and openings are closed with permanent construction or substantial temporary closures equivalent in weather protection to permanent construction.

1.4 GENERAL REQUIREMENTS OF CONTRACTS

A. Extent of Contract: Unless the Agreement contains a more specific description of the Work of each Contract, requirements indicated on Drawings and in Specification Sections determine which contract includes a specific element of Project.

1. Unless otherwise indicated, the work described in this Section for each contract shall be complete systems and assemblies, including products, components, accessories, and installation required by the Contract Documents.
2. Trenches and other excavation for the work of each contract shall be the work of the General Construction Contract.
3. Blocking, backing panels, sleeves, and metal fabrication supports for the work of each contract shall be the work of each contract for its own work.
4. Furnishing of access panels for the work of each contract shall be the work of each contract for its own work. Installation of access panels shall be the work of each contract for its own work.
5. Roof-mounted equipment curbs for the work of each contract shall be the work of each contract for its own work.

6. Painting for the work of each contract shall be the work of the General Construction Contract.
7. Cutting and Patching: Each contract shall perform its own cutting; patching shall be under the General Construction Contract.
8. Contractors' Startup Construction Schedule: Within five working days after startup horizontal bar-chart-type construction schedule submittal has been received from Project coordinator, submit a matching startup horizontal bar-chart schedule showing construction operations sequenced and coordinated with overall construction.

B. Temporary Facilities and Controls: In addition to specific responsibilities for temporary facilities and controls indicated in this Section and in Section 015000 "Temporary Facilities and Controls," each contractor is responsible for the following:

1. Installation, operation, maintenance, and removal of each temporary facility necessary for its own normal construction activity, and costs and use charges associated with each facility, except as otherwise provided for in this Section.
2. Plug-in electric power cords and extension cords, supplementary plug-in task lighting, and special lighting necessary exclusively for its own activities.
3. Its own field office, complete with necessary furniture, utilities, and telephone service.
4. Its own storage and fabrication sheds.
5. Temporary enclosures for its own construction activities.
6. Staging and scaffolding for its own construction activities.
7. General hoisting facilities for its own construction activities, up to 2 tons (2000 kg).
8. Waste disposal facilities, including collection and legal disposal of its own hazardous, dangerous, unsanitary, or other harmful waste materials.
9. Progress cleaning of work areas affected by its operations on a daily basis.
10. Secure lockup of its own tools, materials, and equipment.
11. Construction aids and miscellaneous services and facilities necessary exclusively for its own construction activities.

C. Temporary Heating, Cooling, and Ventilation: Prior to building enclosure, The General Construction Contract is responsible for temporary heating, cooling, and ventilation, including utility-use charges, temporary meters, and temporary connections including but not limited to temporary propane heating during masonry and concrete placement.

D. Temporary Heating, Cooling, and Ventilation: The General Construction Contract is responsible for temporary heating, cooling, and ventilation before weathertight enclosure of building is complete. After building enclosure, the HVAC Contract is responsible for temporary heating, cooling, and ventilation and Owner will pay utility-use charges.

E. Use Charges: Comply with the following:

1. Sewer Service: The owner will pay for cost for sewer service use by all parties engaged in construction activities at Project site.
2. Water Service: The owner will pay for cost for water service, whether metered or otherwise, for water used by all entities engaged in construction activities at Project site in the General Construction Contract.

3. Electric Power Service: The owner will pay for cost for electric power service, whether metered or otherwise, for electricity used by all entities engaged in construction activities at Project site in the Electrical Contract.

1.5 GENERAL CONSTRUCTION CONTRACT

A. Work of the General Construction Contract includes, but is not limited to, the following:

1. Remaining work not identified as work under other contracts.
2. Purchasing and posting of overall project building permit on site.
3. Site preparation, including clearing, building demolition and relocations, and earthwork.
4. Site improvements, including roadways, parking lots, and pedestrian paving.
5. Tunnels for site utilities.
6. Selective demolition.
7. Slabs-on-grade, including earthwork, subdrainage systems, and insulation.
8. Below-grade building construction, including excavation, backfill, and insulation and waterproofing/damp proofing.
9. Exterior closure, including, walls, doors, and windows.
10. Interior construction, including partitions, doors, interior glazed openings, and fittings.
11. Interior finishes finish carpentry, interior specialties, and floor and ceiling finishes.
12. Miscellaneous items, including painting of mechanical and electrical work.

B. Temporary facilities and controls in the General Construction Contract include, but are not limited to, the following:

1. Temporary facilities and controls that are not otherwise specifically assigned to the Plumbing Contract, HVAC Contract, Electrical Contract.
2. Sediment and erosion control.
3. Unpiped sewers and drainage, including drainage ditches, dry wells, stabilization ponds, and containers.
4. Storm water control.
5. Unpiped temporary toilet fixtures, wash facilities, and drinking water facilities, including disposable supplies.
6. Temporary enclosure for building exterior, except as indicated.
7. Temporary roads and paved areas.
8. Dewatering facilities and drains.
9. Special or unusual hoisting requirements for construction activities, including hoisting loads more than 2 tons (2000 kg), hoisting material or equipment into spaces below grade, and hoisting requirements outside building enclosure.
10. Project identification and temporary signs.
11. General waste disposal facilities.
12. Pest control.
13. Temporary fire-protection facilities.
14. Barricades, warning signs, and lights.
15. Site enclosure fence.
16. Covered walkways.
17. Security enclosure and lockup.
18. Environmental protection.

19. Maintenance and restoration of Owner's existing facilities used as temporary facilities.
20. Temporary heating & ventilation including propane heater & fuel costs.

1.6 ELECTRICAL CONTRACT

A. Work of the Electrical Contract includes, but is not limited to, the following:

1. Electrical service and distribution.
2. Exterior and interior lighting.
3. Special electrical systems, including the following:

    a. Automated entrance control wiring and power.
    b. Ceiling mounted electric heater control wiring and power.

4. Electrical connections to equipment furnished by the General Construction Contract Plumbing Contract, HVAC Contract, and Electrical Contract.

B. Temporary facilities and controls in the Electrical Contract include, but are not limited to, the following:

1. Electric power service and distribution.
2. Lighting, including site lighting.
3. Electrical connections to existing systems and temporary facilities and controls.

PART 2 - PRODUCTS (Not Used)

PART 3 - EXECUTION (Not Used)

END OF SECTION 011200

SECTION 012100 - ALLOWANCES

PART 1 - GENERAL

1.1 SUMMARY

A. Section includes administrative and procedural requirements governing allowances.

B. Types of allowances include the following:

1. Lump-sum allowances.

C. Related Requirements:

1. Section 011200 "Multiple Contract Summary" for division of work.

1.2 SELECTION AND PURCHASE

A. At the earliest practical date after award of the Contract, the General Contractor shall purchase the building permit for the project and pick up the permit from the local code office for posting on site including electrical scopes of work.

1.3 ACTION SUBMITTALS

A. Submit invoice copy for purchase of the building permit included in allowances.

1.4 INFORMATIONAL SUBMITTALS

A. Coordinate and building permit submittals for allowance items in same manner as for other portions of the Work.

1.5 LUMP-SUM ALLOWANCES

A. Allowance shall include cost to Contractor of specific building permit ordered by Owner or Architect under allowance and shall include taxes and delivery to Project site. Contractor shall limit overhead and profit mark up to a maximum of 10% over the actual cost of each allowance item.

PART 2 - PRODUCTS (Not Used)

PART 3 - EXECUTION

3.1 SCHEDULE OF ALLOWANCES

A. Allowance No. 1: Building Permit purchase and posting.

1. General Contractor shall coordinate with local code official to purchase the overall project building permit for posting on site estimated at $12,000.

B. Allowance No. 2: Ticketing podium.

1. General Contractor shall purchase, furnish and install a ticketing podium for the interior of Gate 3 estimated at $10,000.
2. Contact: AG, Scott Jelliman, Account Manager, USM Airportsystems , (416) 723-5549. Final design to be determined by the Owner and USM.

C. Allowance No. 3: Security camera, electronic door strike and door controls.

1. Security camera, electronic door strike and door controls to be furnished and installed by Miller Information Systems and the contactor shall carry an allowance of $5,000 to purchase the systems specified from MIS:
2. Hes 9600 Series Surface Mounted electric Strike (By MIS)
3. Magnasphere MSS-20CL-W Door Position Switch (By MIS)
4. Bosch DS150i Request to Exit Sensor or comparable for weather rating (By MIS)
5. MIS will demo existing configuration salvaging card reader and wiring for reuse
6. During installation of new Frame, MIS will re-trim cabling in the door for new configuration (rough-ins should be reviewed prior to frame being set)
7. MIS to Reinstall salvaged card reader on terminal side, install new devices, test and program
8. MIS also to pull new Cat6 for New fixed camera location (Camera by MIS as well), and tie into Genetec platform.
9. Contact: Joshua Cochran, Practice Lead, Miller Information Systems, 412-781-500 (x341).

END OF SECTION 012100

SECTION 012500 - SUBSTITUTION PROCEDURES

PART 1 - GENERAL

1.1 RELATED DOCUMENTS

A. Drawings and general provisions of the Contract, including General and Supplementary Conditions and other Division 01 Specification Sections, apply to this Section.

1.2 SUMMARY

A. Section includes administrative and procedural requirements for substitutions.

B. Related Requirements:

1. Section 0013300 "SUBMITTAL PROCEDURES" for products submittals.

1.3 DEFINITIONS

A. Substitutions: Changes in products, materials, equipment, and methods of construction from those required by the Contract Documents and proposed by Contractor.

1. Substitutions for Cause: Changes proposed by Contractor that are required due to changed Project conditions, such as unavailability of product, regulatory changes, or unavailability of required warranty terms.
2. Substitutions for Convenience: Changes proposed by Contractor or Owner that are not required in order to meet other Project requirements but may offer advantage to Contractor or Owner.

1.4 ACTION SUBMITTALS

A. Substitution Requests: Submit three copies of each request for consideration. Identify product or fabrication or installation method to be replaced. Include Specification Section number and title and Drawing numbers and titles.

1. Substitution Request Form: Use facsimile of form provided in Project Manual.
2. Documentation: Show compliance with requirements for substitutions and the following, as applicable:

a. Statement indicating why specified product or fabrication or installation method cannot be provided, if applicable.
b. Coordination of information, including a list of changes or revisions needed to other parts of the Work and to construction performed by Owner and separate contractors that will be necessary to accommodate proposed substitution.
c. Detailed comparison of significant qualities of proposed substitutions with those of the Work specified. Include annotated copy of applicable Specification Section. Significant qualities may include attributes, such as performance, weight, size, durability, visual effect, sustainable design

characteristics, warranties, and specific features and requirements indicated. Indicate deviations, if any, from the Work specified.

d. Product Data, including drawings and descriptions of products and fabrication and installation procedures.
e. Samples, where applicable or requested.
f. Certificates and qualification data, where applicable or requested.
g. List of similar installations for completed projects, with project names and addresses as well as names and addresses of architects and owners.
h. Material test reports from a qualified testing agency, indicating and interpreting test results for compliance with requirements indicated.
i. Research reports evidencing compliance with building code in effect for Project, from ICC-ES.
j. Detailed comparison of Contractor's construction schedule using proposed substitutions with products specified for the Work, including effect on the overall Contract Time. If specified product or method of construction cannot be provided within the Contract Time, include letter from manufacturer, on manufacturer's letterhead, stating date of receipt of purchase order, lack of availability, or delays in delivery.
k. Cost information, including a proposal of change, if any, in the Contract Sum.
l. Contractor's certification that proposed substitution complies with requirements in the Contract Documents, except as indicated in substitution request, is compatible with related materials and is appropriate for applications indicated.
m. Contractor's waiver of rights to additional payment or time that may subsequently become necessary because of failure of proposed substitution to produce indicated results.

3. Architect's Action: If necessary, Architect will request additional information or documentation for evaluation within seven days of receipt of a request for substitution. Architect will notify Contractor, through the Engineer of acceptance or rejection of proposed substitution within 15 days of receipt of request, or seven days of receipt of additional information or documentation, whichever is later.

a. Forms of Acceptance: Change Order, Construction Change Directive, or Architect's Supplemental Instructions for minor changes in the Work.
b. Use product specified if Architect does not issue a decision on use of a proposed substitution within time allocated.

1.5 QUALITY ASSURANCE

A. Compatibility of Substitutions: Investigate and document compatibility of proposed substitution with related products and materials. Engage a qualified testing agency to perform compatibility tests recommended by manufacturers.

1.6 PROCEDURES

A. Coordination: Revise or adjust affected work as necessary to integrate work of the approved substitutions.

1.7 SUBSTITUTIONS

A. Substitutions for Cause: Submit requests for substitution immediately on discovery of need for change, but not later than 15 days prior to time required for preparation and review of related submittals.

1. Conditions: Architect will consider Contractor's request for substitution when the following conditions are satisfied. If the following conditions are not satisfied, Architect will return requests without action, except to record noncompliance with these requirements:

a. Requested substitution is consistent with the Contract Documents and will produce indicated results.
b. Substitution request is fully documented and properly submitted.
c. Requested substitution will not adversely affect Contractor's construction schedule.
d. Requested substitution has received necessary approvals of authorities having jurisdiction.
e. Requested substitution is compatible with other portions of the Work.
f. Requested substitution has been coordinated with other portions of the Work.
g. Requested substitution provides specified warranty.
h. If requested substitution involves more than one contractor, requested substitution has been coordinated with other portions of the Work, is uniform and consistent, is compatible with other products, and is acceptable to all contractors involved.

B. Substitutions for Convenience: Not allowed.

PART 2 - PRODUCTS (Not Used)

PART 3 - EXECUTION (Not Used)

END OF SECTION 012500

This page intentionally left blank.

SECTION 012600 - CONTRACT MODIFICATION PROCEDURES

PART 1 - GENERAL

1.1 RELATED DOCUMENTS

A. Drawings and general provisions of the Contract, including General and Supplementary Conditions and other Division 01 Specification Sections, apply to this Section.

1.2 SUMMARY

A. Section includes administrative and procedural requirements for handling and processing Contract modifications.

B. Related Requirements:

1. Section 012500 "Substitution Procedures" for administrative procedures for handling requests for substitutions made after the Contract award.

1.3 MINOR CHANGES IN THE WORK

A. Architect will issue, through the Engineer, supplemental instructions authorizing minor changes in the Work, not involving adjustment to the Contract Sum or the Contract Time, on a standard form.

1.4 PROPOSAL REQUESTS

A. Owner-Initiated Proposal Requests: Architect and/or Engineer will issue a detailed description of proposed changes in the Work that may require adjustment to the Contract Sum or the Contract Time. If necessary, the description will include supplemental or revised Drawings and Specifications.

1. Work Change Proposal Requests issued by Architect and Engineer are not instructions either to stop work in progress or to execute the proposed change.
2. Within 15 days after receipt of Proposal Request, submit a quotation estimating cost adjustments to the Contract Sum and the Contract Time necessary to execute the change.

    a. Include a list of quantities of products required or eliminated and unit costs, with total amount of purchases and credits to be made. If requested, furnish survey data to substantiate quantities.
    b. Indicate applicable taxes, delivery charges, equipment rental, and amounts of trade discounts.
    c. Include costs of labor and supervision directly attributable to the change.
    d. Include an updated Contractor's construction schedule that indicates the effect of the change, including, but not limited to, changes in activity duration, start and finish times, and activity relationship. Use available total float before requesting an extension of the Contract Time.
    e. Quotation Form: Use standard form.

B. Contractor-Initiated Proposals: If latent or changed conditions require modifications to the Contract, Contractor may initiate a claim by submitting a request for a change to the Architect and Engineer.

1. Include a statement outlining reasons for the change and the effect of the change on the Work. Provide a complete description of the proposed change. Indicate the effect of the proposed change on the Contract Sum and the Contract Time.
2. Include a list of quantities of products required or eliminated and unit costs, with total amount of purchases and credits to be made. If requested, furnish survey data to substantiate quantities.
3. Indicate applicable taxes, delivery charges, equipment rental, and amounts of trade discounts.
4. Include costs of labor and supervision directly attributable to the change.
5. Include an updated Contractor's construction schedule that indicates the effect of the change, including, but not limited to, changes in activity duration, start and finish times, and activity relationship. Use available total float before requesting an extension of the Contract Time.
6. Comply with requirements in Section 012500 "Substitution Procedures" if the proposed change requires substitution of one product or system for product or system specified.
7. Proposal Request Form: Use form acceptable to Architect and Engineer.

1.5 CHANGE ORDER PROCEDURES

A. On Owner's approval of a Work Change Proposal Request, the Engineer will issue a Change Order for signatures of Owner and Contractor on standard form.

1.6 FIELD WORK DIRECTIVE

A. Field Work Directive: Architect and/or Engineer may issue a Field Work Directive on a standard form. Field Work Directive instructs Contractor to proceed with a change in the Work, for subsequent inclusion in a Change Order.

1. Field Work Directive contains a complete description of change in the Work. It also designates method to be followed to determine change in the Contract Sum or the Contract Time.

B. Documentation: Maintain detailed records on a time and material basis of work required by the Work Change Directive.

1. After completion of change, submit an itemized account and supporting data necessary to substantiate cost and time adjustments to the Contract.

PART 2 - PRODUCTS (Not Used)

PART 3 - EXECUTION (Not Used)

END OF SECTION 012600

SECTION 013100 - PROJECT MANAGEMENT AND COORDINATION

PART 1 - GENERAL

1.1 RELATED DOCUMENTS

A. Drawings and general provisions of the Contract, including General and Supplementary Conditions and other Division 01 Specification Sections, apply to this Section.

1.2 SUMMARY

A. Section includes administrative provisions for coordinating construction operations on Project including, but not limited to, the following:

1. General coordination procedures.
2. Coordination drawings.
3. RFIs.
4. Digital project management procedures.
5. Project meetings.

B. Each contractor shall participate in coordination requirements. Certain areas of responsibility are assigned to a specific contractor.

C. Related Requirements:

1. Section 011200 "Multiple Contract Summary" for a description of the division of work among separate contracts and responsibility for coordination activities not in this Section.
2. Section 017700 "Closeout Procedures" for coordinating closeout of the Contract.

1.3 DEFINITIONS

A. BIM: Building Information Modeling.

B. RFI: Request for Information. Request from Owner, Engineer, Architect, or Contractor seeking information required by or clarifications of the Contract Documents.

1.4 INFORMATIONAL SUBMITTALS

A. Subcontract List: Prepare a written summary identifying individuals or firms proposed for each portion of the Work, including those who are to furnish products or equipment fabricated to a special design. Include the following information in tabular form:

1. Name, address, telephone number, and email address of entity performing subcontract or supplying products.
2. Number and title of related Specification Section(s) covered by subcontract.
3. Drawing number and detail references, as appropriate, covered by subcontract.

B. Key Personnel Names: Within 15 days of starting construction operations, submit a list of key personnel assignments, including superintendent and other personnel in attendance at Project site. Identify individuals and their duties and responsibilities; list

addresses and cellular telephone numbers and e-mail addresses. Provide names, addresses, and telephone numbers of individuals assigned as alternates in the absence of individuals assigned to Project.

1. Post copies of list in project meeting room, in temporary field office, and in prominent location in built facility. Keep list current at all times.

1.5 GENERAL COORDINATION PROCEDURES

A. Coordination: Coordinate construction operations included in different Sections of the Specifications to ensure efficient and orderly installation of each part of the Work. Coordinate construction operations included in different Sections that depend on each other for proper installation, connection, and operation.

1. Schedule construction operations in sequence required to obtain the best results where installation of one part of the Work depends on installation of other components, before or after its own installation.
2. Coordinate installation of different components to ensure maximum performance and accessibility for required maintenance, service, and repair.
3. Make adequate provisions to accommodate items scheduled for later installation.

B. Coordination: Each contractor shall coordinate its construction operations with those of other contractors and entities to ensure efficient and orderly installation of each part of the Work. Each contractor shall coordinate its own operations with operations included in different Sections that depend on each other for proper installation, connection, and operation.

1. Schedule construction operations in sequence required to obtain the best results where installation of one part of the Work depends on installation of other components, before or after its own installation.
2. Coordinate installation of different components with other contractors to ensure maximum performance and accessibility for required maintenance, service, and repair.
3. Make adequate provisions to accommodate items scheduled for later installation.

C. Prepare memoranda for distribution to each party involved, outlining special procedures required for coordination. Include such items as required notices, reports, and list of attendees at meetings.

1. Prepare similar memoranda for Owner and separate contractors if coordination of their Work is required.

D. Administrative Procedures: Coordinate scheduling and timing of required administrative procedures with other construction activities and scheduled activities of other contractors to avoid conflicts and to ensure orderly progress of the Work. Such administrative activities include, but are not limited to, the following:

1. Preparation of Contractor's construction schedule.
2. Preparation of the schedule of values.
3. Installation and removal of temporary facilities and controls.
4. Delivery and processing of submittals.

5. Progress meetings.
6. Preinstallation conferences.
7. Project closeout activities.
8. Startup and adjustment of systems.

1.6 COORDINATION DRAWINGS

A. Coordination Drawings, General: Prepare coordination drawings according to requirements in individual Sections, and additionally where installation is not completely indicated on Shop Drawings, where limited space availability necessitates coordination, or if coordination is required to facilitate integration of products and materials fabricated or installed by more than one entity.

1. Content: Project-specific information, drawn accurately to a scale large enough to indicate and resolve conflicts. Do not base coordination drawings on standard printed data. Include the following information, as applicable:

    a. Use applicable Drawings as a basis for preparation of coordination drawings. Prepare sections, elevations, and details as needed to describe relationship of various systems and components.
    b. Coordinate the addition of trade-specific information to coordination drawings by multiple contractors in a sequence that best provides for coordination of the information and resolution of conflicts between installed components before submitting for review.
    c. Indicate functional and spatial relationships of components of architectural, structural, civil, mechanical, and electrical systems.
    d. Indicate space requirements for routine maintenance and for anticipated replacement of components during the life of the installation.
    e. Show location and size of access doors required for access to concealed dampers, valves, and other controls.
    f. Indicate required installation sequences.
    g. Indicate dimensions shown on Drawings. Specifically note dimensions that appear to be in conflict with submitted equipment and minimum clearance requirements. Provide alternative sketches to Architect indicating proposed resolution of such conflicts. Minor dimension changes and difficult installations will not be considered changes to the Contract.

B. Coordination Drawing Organization: Organize coordination drawings as follows:

1. Floor Plans and Reflected Ceiling Plans: Show architectural and structural elements, and mechanical, plumbing, fire-protection, fire-alarm, and electrical Work. Show locations of visible ceiling-mounted devices relative to acoustical ceiling grid. Supplement plan drawings with section drawings where required to adequately represent the Work.
2. Structural Penetrations: Indicate penetrations and openings required for all disciplines.
3. Electrical Work: Show the following:

    a. Runs of vertical and horizontal conduit 1-1/4 inches (32 mm) in diameter and larger.

b. Light fixture, exit light, emergency battery pack, smoke detector, and other fire-alarm locations.
c. Panel board, switch board, switchgear, transformer, busway, generator, and motor-control center locations.
d. Location of pull boxes and junction boxes, dimensioned from column center lines.

4. Review: Architect will review coordination drawings to confirm that in general the Work is being coordinated, but not for the details of the coordination, which are Contractor's responsibility. If Architect determines that coordination drawings are not being prepared in sufficient scope or detail, or are otherwise deficient, Architect will so inform Contractor, who shall make suitable modifications and resubmit.
5. Coordination Drawing Prints: Prepare coordination drawing prints according to requirements in Section 013300 "Submittal Procedures."

C. Coordination Digital Data Files: Prepare coordination digital data files according to the following requirements:

1. File Preparation Format: Same digital data software program, version, and operating system as original Drawings.
2. File Preparation Format: DWG, Version AutoCad 2015, operating in Microsoft Windows operating system.
3. File Submittal Format: Submit or post coordination drawing files using PDF format.

a. Perform three-dimensional component conflict analysis as part of preparation of coordination drawings. Resolve component conflicts prior to submittal. Indicate where conflict resolution requires modification of design requirements by Architect.

4. Architect will furnish Contractor one set of digital data files of Drawings for use in preparing coordination digital data files.

a. Architect makes no representations as to the accuracy or completeness of digital data files as they relate to Drawings.
b. Digital Data Software Program: Drawings are available in Revit 2015, or AutoCad 2015.
c. Contractor shall execute a data licensing agreement in the form of Agreement form acceptable to the Architect.

1.7 REQUEST FOR INFORMATION (RFI)

A. General: Immediately on discovery of the need for additional information, clarification, or interpretation of the Contract Documents, Contractor shall prepare and submit an RFI in the form specified.

1. Architect will return without response those RFIs submitted to Architect by other entities controlled by Contractor.
2. Coordinate and submit RFIs in a prompt manner so as to avoid delays in Contractor's work or work of subcontractors.

B. Content of the RFI: Include a detailed, legible description of item needing information or interpretation and the following:

1. Project name.
2. Project number.
3. Date.
4. Name of Contractor.
5. Name of Architect and Engineer.
6. RFI number, numbered sequentially.
7. RFI subject.
8. Specification Section number and title and related paragraphs, as appropriate.
9. Drawing number and detail references, as appropriate.
10. Field dimensions and conditions, as appropriate.
11. Contractor's suggested resolution. If Contractor's suggested resolution impacts the Contract Time or the Contract Sum, Contractor shall state impact in the RFI.
12. Contractor's signature.
13. Attachments: Include sketches, descriptions, measurements, photos, Product Data, Shop Drawings, coordination drawings, and other information necessary to fully describe items needing interpretation.

    a. Include dimensions, thicknesses, structural grid references, and details of affected materials, assemblies, and attachments on attached sketches.

C. RFI Forms: Software-generated form with substantially the same content as indicated above, acceptable to Architect.

1. Attachments shall be electronic files in PDF format.

D. Architect's and Engineer Action: Architect and Engineer will review each RFI, determine action required, and respond. Allow seven working days for Architect's response for each RFI. RFIs received by Architect and Engineer after 1:00 p.m. will be considered as received the following working day.

1. The following Contractor-generated RFIs will be returned without action:

    a. Requests for approval of submittals.
    b. Requests for approval of substitutions.
    c. Requests for approval of Contractor's means and methods.
    d. Requests for coordination information already indicated in the Contract Documents.
    e. Requests for adjustments in the Contract Time or the Contract Sum.
    f. Requests for interpretation of Architect's actions on submittals.
    g. Incomplete RFIs or inaccurately prepared RFIs.

2. Architect's action may include a request for additional information, in which case Architect's time for response will date from time of receipt by Architect or Engineer of additional information.
3. Architect's action on RFIs that may result in a change to the Contract Time or the Contract Sum may be eligible for Contractor to submit Change Proposal according to Section 012600 "Contract Modification Procedures."

a. If Contractor believes the RFI response warrants change in the Contract Time or the Contract Sum, notify Architect and Engineer in writing within 10 days of receipt of the RFI response.

E. RFI Log: Prepare, maintain, and submit a tabular log of RFIs organized by the RFI number. Submit log bi-monthly.

1. Project name.
2. Name and address of Contractor.
3. Name and address of Architect and Engineer.
4. RFI number including RFIs that were returned without action or withdrawn.
5. RFI description.
6. Date the RFI was submitted.
7. Date Architect's and Engineer response was received.
8. Identification of related Minor Change in the Work, Construction Change Directive, and Proposal Request, as appropriate.
9. Identification of related Field Order, Work Change Directive, and Proposal Request, as appropriate.

F. On receipt of Architect's and Engineer action, update the RFI log and immediately distribute the RFI response to affected parties. Review response and notify Architect and Engineer within seven days if Contractor disagrees with response.

G. PDF Document Preparation: Where PDFs are required to be submitted to Architect, prepare as follows:

1. Assemble complete submittal package into a single indexed file incorporating submittal requirements of a single Specification Section and transmittal form with links enabling navigation to each item.
2. Name file with submittal number or other unique identifier, including revision identifier.
3. Certifications: Where digitally submitted certificates and certifications are required, provide a digital signature with digital certificate on where indicated.

1.8 PROJECT MEETINGS

A. General: Engineer will schedule and conduct meetings and conferences at Project site unless otherwise indicated.

1. Attendees: Inform participants and others involved, and individuals whose presence is required, of date and time of each meeting. Notify Owner and Architect of scheduled meeting dates and times a minimum of 10 working days prior to meeting.
2. Agenda: Prepare the meeting agenda. Distribute the agenda to all invited attendees.
3. Minutes: Entity responsible for conducting meeting will record significant discussions and agreements achieved. Distribute the meeting minutes to everyone concerned, including Owner, Engineer and Architect, within three days of the meeting.

B. Preconstruction Conference: Engineer will schedule and conduct a preconstruction conference before starting construction, at a time convenient to Owner and Architect, but no later than 15 days after execution of the Agreement.

1. Attendees: Authorized representatives of Owner, Engineer, Architect, and their consultants; Contractor and its superintendent; major subcontractors; suppliers; and other concerned parties shall attend the conference. Participants at the conference shall be familiar with Project and authorized to conclude matters relating to the Work.
2. Agenda: Discuss items of significance that could affect progress, including the following:

    a. Responsibilities and personnel assignments.
    b. Tentative construction schedule.
    c. Phasing.
    d. Critical work sequencing and long lead items.
    e. Designation of key personnel and their duties.
    f. Lines of communications.
    g. Use of web-based Project software.
    h. Procedures for processing field decisions and Change Orders.
    i. Procedures for RFIs.
    j. Procedures for testing and inspecting.
    k. Procedures for processing Applications for Payment.
    l. Distribution of the Contract Documents.
    m. Submittal procedures.
    n. Sustainable design requirements.
    o. Preparation of Record Documents.
    p. Use of the premises and existing building.
    q. Work restrictions.
    r. Working hours.
    s. Owner's occupancy requirements.
    t. Responsibility for temporary facilities and controls.
    u. Procedures for moisture and mold control.
    v. Procedures for disruptions and shutdowns.
    w. Construction waste management and recycling.
    x. Parking availability.
    y. Office, work, and storage areas.
    z. Equipment deliveries and priorities.
    aa. First aid.
    bb. Security.
    cc. Progress cleaning.

3. Minutes: Entity responsible for conducting meeting will record and distribute meeting minutes.

C. Preinstallation Conferences: Conduct a preinstallation conference at Project site before each construction activity when required by other sections and when required for coordination with other construction.

1. Attendees: Installer and representatives of manufacturers and fabricators involved in or affected by the installation and its coordination or integration with

other materials and installations that have preceded or will follow, shall attend the meeting. Advise Architect and Engineer of scheduled meeting dates.

2. Agenda: Review progress of other construction activities and preparations for the particular activity under consideration, including requirements for the following:

    a. Contract Documents.
    b. Options.
    c. Related RFIs.
    d. Related Change Orders.
    e. Purchases.
    f. Deliveries.
    g. Submittals.
    h. Sustainable design requirements.
    i. Review of mockups.
    j. Possible conflicts.
    k. Compatibility requirements.
    l. Time schedules.
    m. Weather limitations.
    n. Manufacturer's written instructions.
    o. Warranty requirements.
    p. Compatibility of materials.
    q. Acceptability of substrates.
    r. Temporary facilities and controls.
    s. Space and access limitations.
    t. Regulations of authorities having jurisdiction.
    u. Testing and inspecting requirements.
    v. Installation procedures.
    w. Coordination with other work.
    x. Required performance results.
    y. Protection of adjacent work.
    z. Protection of construction and personnel.

3. Record significant conference discussions, agreements, and disagreements, including required corrective measures and actions.
4. Reporting: Distribute minutes of the meeting to each party present and to other parties requiring information.
5. Do not proceed with installation if the conference cannot be successfully concluded. Initiate whatever actions are necessary to resolve impediments to performance of the Work and reconvene the conference at earliest feasible date.

D. Project Closeout Conference: Engineer will schedule and conduct a project closeout conference, at a time convenient to Owner and Architect, but no later than 90 days prior to the scheduled date of Substantial Completion.

1. Conduct the conference to review requirements and responsibilities related to Project closeout.
2. Attendees: Authorized representatives of Owner, Engineer, Architect, and their consultants; Contractor and its superintendent; major subcontractors; suppliers; and other concerned parties shall attend the meeting. Participants at the meeting shall be familiar with Project and authorized to conclude matters relating to the Work.

3. Agenda: Discuss items of significance that could affect or delay Project closeout, including the following:

    a. Preparation of Record Documents.
    b. Procedures required prior to inspection for Substantial Completion and for final inspection for acceptance.
    c. Procedures for completing and archiving web-based Project software site data files.
    d. Submittal of written warranties.
    e. Requirements for completing sustainable design documentation.
    f. Requirements for preparing operations and maintenance data.
    g. Requirements for delivery of material samples, attic stock, and spare parts.
    h. Requirements for demonstration and training.
    i. Preparation of Contractor's punch list.
    j. Procedures for processing Applications for Payment at Substantial Completion and for final payment.
    k. Submittal procedures.
    l. Coordination of separate contracts.
    m. Owner's partial occupancy requirements.
    n. Installation of Owner's furniture, fixtures, and equipment.
    o. Responsibility for removing temporary facilities and controls.

4. Minutes: Entity conducting meeting will record and distribute meeting minutes.

E. Progress Meetings: Engineer will conduct progress meetings at biweekly intervals.

1. Coordinate dates of meetings with preparation of payment requests.
2. Attendees: In addition to representatives of Owner, Engineer and Architect, each contractor, subcontractor, supplier, and other entity concerned with current progress or involved in planning, coordination, or performance of future activities shall be represented at these meetings. All participants at the meeting shall be familiar with Project and authorized to conclude matters relating to the Work.
3. Agenda: Review and correct or approve minutes of previous progress meeting. Review other items of significance that could affect progress. Include topics for discussion as appropriate to status of Project.

    a. Contractor's Construction Schedule: Review progress since the last meeting. Determine whether each activity is on time, ahead of schedule, or behind schedule, in relation to Contractor's construction schedule. Determine how construction behind schedule will be expedited; secure commitments from parties involved to do so. Discuss whether schedule revisions are required to ensure that current and subsequent activities will be completed within the Contract Time.

        1) Review schedule for next period.

    b. Review present and future needs of each entity present, including the following:

        1) Interface requirements.

2) Sequence of operations.
3) Resolution of conflicts.
4) Status of submittals.
5) Status of sustainable design documentation.
6) Deliveries.
7) Off-site fabrication.
8) Access.
9) Site use.
10) Temporary facilities and controls.
11) Progress cleaning.
12) Quality and work standards.
13) Status of correction of deficient items.
14) Field observations.
15) Status of RFIs.
16) Status of Proposal Requests.
17) Pending changes.
18) Status of Change Orders.
19) Pending claims and disputes.
20) Documentation of information for payment requests.

4. Minutes: Entity responsible for conducting the meeting will record and distribute the meeting minutes to each party present and to parties requiring information.

a. Schedule Updating: Revise Contractor's construction schedule after each progress meeting where revisions to the schedule have been made or recognized. Issue revised schedule concurrently with the report of each meeting.

F. Coordination Meetings: Conduct Project coordination meetings at weekly intervals. Project coordination meetings are in addition to specific meetings held for other purposes, such as progress meetings and preinstallation conferences.

1. Attendees: In addition to representatives of Owner, Engineer and Architect, each contractor, subcontractor, supplier, and other entity concerned with current progress or involved in planning, coordination, or performance of future activities shall be represented at these meetings. All participants at the meetings shall be familiar with Project and authorized to conclude matters relating to the Work.
2. Agenda: Review and correct or approve minutes of the previous coordination meeting. Review other items of significance that could affect progress. Include topics for discussion as appropriate to status of Project.

a. Combined Contractor's Construction Schedule: Review progress since the last coordination meeting. Determine whether each contract is on time, ahead of schedule, or behind schedule, in relation to combined Contractor's construction schedule. Determine how construction behind schedule will be expedited; secure commitments from parties involved to do so. Discuss whether schedule revisions are required to ensure that current and subsequent activities will be completed within the Contract Time.
b. Schedule Updating: Revise combined Contractor's construction schedule after each coordination meeting where revisions to the schedule have

been made or recognized. Issue revised schedule concurrently with report of each meeting.

c. Review present and future needs of each contractor present, including the following:

1) Interface requirements.
2) Sequence of operations.
3) Resolution of BIM component conflicts.
4) Status of submittals.
5) Deliveries.
6) Off-site fabrication.
7) Access.
8) Site use.
9) Temporary facilities and controls.
10) Work hours.
11) Hazards and risks.
12) Progress cleaning.
13) Quality and work standards.
14) Status of RFIs.
15) Proposal Requests.
16) Change Orders.
17) Pending changes.

3. Reporting: Record meeting results and distribute copies to everyone in attendance and to others affected by decisions or actions resulting from each meeting.

PART 2 - PRODUCTS (Not Used)

PART 3 - EXECUTION (Not Used)

END OF SECTION 013100

This page intentionally left blank.

SECTION 013300 - SUBMITTAL PROCEDURES

PART 1 - GENERAL

1.1 RELATED DOCUMENTS

A. Drawings and general provisions of the Contract, including General and Supplementary Conditions and other Division 01 Specification Sections, apply to this Section.

1.2 SUMMARY

A. Section Includes:

1. Submittal schedule requirements.
2. Administrative and procedural requirements for submittals.

B. Related Requirements:

1. Section 013100 "Project Management and Coordination" for submitting coordination drawings and subcontract list and for requirements for web-based Project software.
2. Section 014000 "Quality Requirements" for submitting test and inspection reports, and schedule of tests and inspections.
3. Section 017700 "Closeout Procedures" for submitting closeout submittals and maintenance material submittals.
4. Section 017839 "Project Record Documents" for submitting record Drawings, record Specifications, and record Product Data.

1.3 DEFINITIONS

A. Action Submittals: Written and graphic information and physical samples that require Architect's and Engineer’s responsive action. Action submittals are those submittals indicated in individual Specification Sections as "action submittals."

B. Informational Submittals: Written and graphic information and physical samples that do not require Architect's and Engineer’s responsive action. Submittals may be rejected for not complying with requirements. Informational submittals are those submittals indicated in individual Specification Sections as "informational submittals."

1.4 SUBMITTAL SCHEDULE

A. Submittal Schedule: Submit, as an action submittal, a list of submittals, arranged in chronological order by dates required by construction schedule. Include time required for review, ordering, manufacturing, fabrication, and delivery when establishing dates. Include additional time required for making corrections or revisions to submittals noted by Architect and Engineer and additional time for handling and reviewing submittals required by those corrections.

1. Coordinate submittal schedule with list of subcontracts, the schedule of values, and Contractor's construction schedule.

2. Initial Submittal: Submit concurrently with startup construction schedule. Include submittals required during the first 60 days of construction. List those submittals required to maintain orderly progress of the Work and those required early because of long lead time for manufacture or fabrication.
3. Final Submittal: Submit concurrently with the first complete submittal of Contractor's construction schedule.

    a. Submit revised submittal schedule to reflect changes in current status and timing for submittals.

4. Format: Arrange the following information in a tabular format:

    a. Scheduled date for first submittal.
    b. Specification Section number and title.
    c. Submittal Category: Action; informational.
    d. Name of subcontractor.
    e. Description of the Work covered.
    f. Scheduled date for Architect's and Engineer’s final release or approval.
    g. Scheduled dates for purchasing.
    h. Scheduled date of fabrication.
    i. Scheduled dates for installation.
    j. Activity or event number.

1.5 SUBMITTAL FORMATS

A. Submittal Information: Include the following information in each submittal:

1. Project name.
2. Date.
3. Name of Architect.
4. Name of Construction Manager.
5. Name of Contractor.
6. Name of firm or entity that prepared submittal.
7. Names of subcontractor, manufacturer, and supplier.
8. Unique submittal number, including revision identifier. Include Specification Section number with sequential alphanumeric identifier and alphanumeric suffix for resubmittals.
9. Category and type of submittal.
10. Submittal purpose and description.
11. Number and title of Specification Section, with paragraph number and generic name for each of multiple items.
12. Drawing number and detail references, as appropriate.
13. Indication of full or partial submittal.
14. Location(s) where product is to be installed, as appropriate.
15. Other necessary identification.
16. Remarks.
17. Signature of transmitter.

B. Options: Identify options requiring selection by Architect.

C. Deviations and Additional Information: On each submittal, clearly indicate deviations from requirements in the Contract Documents, including minor variations and limitations; include relevant additional information and revisions, other than those requested by Architect and Engineer on previous submittals. Indicate by highlighting on each submittal or noting on attached separate sheet.

D. Paper Submittals:

1. Place a permanent label or title block on each submittal item for identification; include name of firm or entity that prepared submittal.
2. Provide a space approximately 6 by 8 inches (150 by 200 mm on label or beside title block to record Contractor's review and approval markings and action taken by Architect and Engineer.
3. Transmittal for Submittals: Assemble each submittal individually and appropriately for transmittal and handling. Transmit each submittal using a standard transmittal form.

E. PDF emailed Submittals: Prepare submittals as PDF package, incorporating complete information into each PDF file. Name PDF file with submittal number.

1.6 SUBMITTAL PROCEDURES

A. Prepare and submit submittals required by individual Specification Sections. Types of submittals are indicated in individual Specification Sections.

1. Email: Prepare submittals as PDF package and transmit to Architect by sending via email. Include PDF transmittal form. Include information in email subject line as requested by Architect.

    a. Architect and Engineer will return annotated file. Annotate and retain one copy of file as a digital Project Record Document file.

B. Coordination: Coordinate preparation and processing of submittals with performance of construction activities.

1. Coordinate each submittal with fabrication, purchasing, testing, delivery, other submittals, and related activities that require sequential activity.
2. Submit all submittal items required for each Specification Section concurrently unless partial submittals for portions of the Work are indicated on approved submittal schedule.
3. Submit action submittals and informational submittals required by the same Specification Section as separate packages under separate transmittals.
4. Coordinate transmittal of submittals for related parts of the Work specified in different Sections so processing will not be delayed because of need to review submittals concurrently for coordination.

    a. Architect and Engineer reserve the right to withhold action on a submittal requiring coordination with other submittals until related submittals are received.

C. Processing Time: Allow time for submittal review, including time for resubmittals, as follows. Time for review shall commence on Architect's and Engineer's receipt of submittal. No extension of the Contract Time will be authorized because of failure to transmit submittals enough in advance of the Work to permit processing, including resubmittals.

1. Initial Review: Allow 15 days for initial review of each submittal. Allow additional time if coordination with subsequent submittals is required. Architect or Engineer will advise Contractor when a submittal being processed must be delayed for coordination.
2. Intermediate Review: If intermediate submittal is necessary, process it in same manner as initial submittal.
3. Resubmittal Review: Allow 15 days for review of each resubmittal.
4. Sequential Review: Where sequential review of submittals by Architect's consultants, Owner, or other parties is indicated, allow 15 days for initial review of each submittal.
5. Concurrent Consultant Review: Where the Contract Documents indicate that submittals may be transmitted simultaneously to Architect and to Architect's consultants, allow 15 days for review of each submittal. Submittal will be returned to Architect before being returned to Contractor.

    a. Submit one copy of submittal to concurrent reviewer in addition to specified number of copies to Architect and Engineer.

D. Resubmittals: Make resubmittals in same form and number of copies as initial submittal.

1. Note date and content of previous submittal.
2. Note date and content of revision in label or title block and clearly indicate extent of revision.
3. Resubmit submittals until they are marked with approval notation from Architect's and Engineer's action stamp.

E. Distribution: Furnish copies of final submittals to manufacturers, subcontractors, suppliers, fabricators, installers, authorities having jurisdiction, and others as necessary for performance of construction activities. Show distribution on transmittal forms.

F. Use for Construction: Retain complete copies of submittals on Project site. Use only final action submittals that are marked with approval notation from Architect's and Engineer's action stamp.

1.7 SUBMITTAL REQUIREMENTS

A. Product Data: Collect information into a single submittal for each element of construction and type of product or equipment.

1. If information must be specially prepared for submittal because standard published data are unsuitable for use, submit as Shop Drawings, not as Product Data.
2. Mark each copy of each submittal to show which products and options are applicable.
3. Include the following information, as applicable:

a. Manufacturer's catalog cuts.
b. Manufacturer's product specifications.
c. Standard color charts.
d. Statement of compliance with specified referenced standards.
e. Testing by recognized testing agency.
f. Application of testing agency labels and seals.
g. Notation of coordination requirements.
h. Availability and delivery time information.

4. For equipment, include the following in addition to the above, as applicable:

a. Wiring diagrams that show factory-installed wiring.
b. Printed performance curves.
c. Operational range diagrams.
d. Clearances required to other construction, if not indicated on accompanying Shop Drawings.

5. Submit Product Data before Shop Drawings, and before or concurrent with Samples.

B. Shop Drawings: Prepare Project-specific information, drawn accurately to scale. Do not base Shop Drawings on reproductions of the Contract Documents or standard printed data unless submittal based on Architect's digital data drawing files is otherwise permitted.

1. Preparation: Fully illustrate requirements in the Contract Documents. Include the following information, as applicable:

a. Identification of products.
b. Schedules.
c. Compliance with specified standards.
d. Notation of coordination requirements.
e. Notation of dimensions established by field measurement.
f. Relationship and attachment to adjoining construction clearly indicated.
g. Seal and signature of professional engineer if specified.

2. Paper Sheet Size: Except for templates, patterns, and similar full-size Drawings, submit Shop Drawings on sheets at least 8-1/2 by 11 inches (215 by 280 mm), but no larger than 30 by 42 inches (750 by 1067 mm).

C. Samples: Submit Samples for review of kind, color, pattern, and texture for a check of these characteristics with other materials.

1. Transmit Samples that contain multiple, related components such as accessories together in one submittal package.
2. Identification: Permanently attach label on unexposed side of Samples that includes the following:

a. Project name and submittal number.
b. Generic description of Sample.
c. Product name and name of manufacturer.

d. Sample source.
e. Number and title of applicable Specification Section.
f. Specification paragraph number and generic name of each item.

3. Email Transmittal: Provide PDF transmittal. Include digital image file illustrating Sample characteristics, and identification information for record.
4. Web-Based Project Software: Prepare submittals in PDF form, and upload to web-based Project software website. Enter required data in web-based software site to fully identify submittal.
5. Paper Transmittal: Include paper transmittal including complete submittal information indicated.
6. Disposition: Maintain sets of approved Samples at Project site, available for quality-control comparisons throughout the course of construction activity. Sample sets may be used to determine final acceptance of construction associated with each set.

    a. Samples that may be incorporated into the Work are indicated in individual Specification Sections. Such Samples must be in an undamaged condition at time of use.
    b. Samples not incorporated into the Work, or otherwise designated as Owner's property, are the property of Contractor.

7. Samples for Initial Selection: Submit manufacturer's color charts consisting of units or sections of units showing the full range of colors, textures, and patterns available.

    a. Number of Samples: Submit one full set(s) of available choices where color, pattern, texture, or similar characteristics are required to be selected from manufacturer's product line. Architect will return submittal with options selected.

8. Samples for Verification: Submit full-size units or Samples of size indicated, prepared from same material to be used for the Work, cured and finished in manner specified, and physically identical with material or product proposed for use, and that show full range of color and texture variations expected. Samples include, but are not limited to, the following: partial sections of manufactured or fabricated components; small cuts or containers of materials; complete units of repetitively used materials; swatches showing color, texture, and pattern; color range sets; and components used for independent testing and inspection.

    a. Number of Samples: Submit four sets of Samples. Architect will retain three Sample sets; remainder will be returned. Mark up and retain one returned Sample set as a project record Sample.

        1) Submit a single Sample where assembly details, workmanship, fabrication techniques, connections, operation, and other similar characteristics are to be demonstrated.
        2) If variation in color, pattern, texture, or other characteristic is inherent in material or product represented by a Sample, submit at least three sets of paired units that show approximate limits of variations.

D. Product Schedule: As required in individual Specification Sections, prepare a written summary indicating types of products required for the Work and their intended location. Include the following information in tabular form:

1. Type of product. Include unique identifier for each product indicated in the Contract Documents or assigned by Contractor if none is indicated.
2. Manufacturer and product name, and model number if applicable.
3. Number and name of room or space.
4. Location within room or space.

E. Qualification Data: Prepare written information that demonstrates capabilities and experience of firm or person. Include lists of completed projects with project names and addresses, contact information of architects and owners, and other information specified.

F. Design Data: Prepare and submit written and graphic information indicating compliance with indicated performance and design criteria in individual Specification Sections. Include list of assumptions and summary of loads. Include load diagrams if applicable. Provide name and version of software, if any, used for calculations. Number each page of submittal.

G. Certificates:

1. Certificates and Certifications Submittals: Submit a statement that includes signature of entity responsible for preparing certification. Certificates and certifications shall be signed by an officer or other individual authorized to sign documents on behalf of that entity. Provide a notarized signature where indicated.
2. Installer Certificates: Submit written statements on manufacturer's letterhead certifying that Installer complies with requirements in the Contract Documents and, where required, is authorized by manufacturer for this specific Project.
3. Manufacturer Certificates: Submit written statements on manufacturer's letterhead certifying that manufacturer complies with requirements in the Contract Documents. Include evidence of manufacturing experience where required.
4. Material Certificates: Submit written statements on manufacturer's letterhead certifying that material complies with requirements in the Contract Documents.
5. Product Certificates: Submit written statements on manufacturer's letterhead certifying that product complies with requirements in the Contract Documents.
6. Welding Certificates: Prepare written certification that welding procedures and personnel comply with requirements in the Contract Documents. Submit record of Welding Procedure Specification and Procedure Qualification Record on AWS forms. Include names of firms and personnel certified.

H. Test and Research Reports:

1. Compatibility Test Reports: Submit reports written by a qualified testing agency, on testing agency's standard form, indicating and interpreting results of compatibility tests performed before installation of product. Include written recommendations for primers and substrate preparation needed for adhesion.
2. Field Test Reports: Submit written reports indicating and interpreting results of field tests performed either during installation of product or after product is

installed in its final location, for compliance with requirements in the Contract Documents.

3. Material Test Reports: Submit reports written by a qualified testing agency, on testing agency's standard form, indicating and interpreting test results of material for compliance with requirements in the Contract Documents.
4. Preconstruction Test Reports: Submit reports written by a qualified testing agency, on testing agency's standard form, indicating and interpreting results of tests performed before installation of product, for compliance with performance requirements in the Contract Documents.
5. Product Test Reports: Submit written reports indicating that current product produced by manufacturer complies with requirements in the Contract Documents. Base reports on evaluation of tests performed by manufacturer and witnessed by a qualified testing agency, or on comprehensive tests performed by a qualified testing agency.
6. Research Reports: Submit written evidence, from a model code organization acceptable to authorities having jurisdiction, that product complies with building code in effect for Project. Include the following information:

    a. Name of evaluation organization.
    b. Date of evaluation.
    c. Time period when report is in effect.
    d. Product and manufacturers' names.
    e. Description of product.
    f. Test procedures and results.
    g. Limitations of use.

1.8 DELEGATED-DESIGN SERVICES

A. Performance and Design Criteria: Where professional design services or certifications by a design professional are specifically required of Contractor by the Contract Documents, provide products and systems complying with specific performance and design criteria indicated.

1. If criteria indicated are insufficient to perform services or certification required, submit a written request for additional information to Architect.

B. Delegated-Design Services Certification: In addition to Shop Drawings, Product Data, and other required submittals, submit digitally signed PDF file copies of certificate, signed and sealed by the responsible design professional, for each product and system specifically assigned to Contractor to be designed or certified by a design professional.

1. Indicate that products and systems comply with performance and design criteria in the Contract Documents. Include list of codes, loads, and other factors used in performing these services.

1.9 CONTRACTOR'S REVIEW

A. Action Submittals and Informational Submittals: Review each submittal and check for coordination with other Work of the Contract and for compliance with the Contract Documents. Note corrections and field dimensions. Mark with approval stamp before submitting to Architect and Engineer.

B. Contractor's Approval: Indicate Contractor's approval for each submittal with a uniform approval stamp Include name of reviewer, date of Contractor's approval, and statement certifying that submittal has been reviewed, checked, and approved for compliance with the Contract Documents.

1. Architect and Engineer will not review submittals received from Contractor that do not have Contractor's review and approval.

1.10 ARCHITECT'S AND ENGINEER'S REVIEW

A. Action Submittals: Architect and Engineer will review each submittal, indicate corrections or revisions required, and return it.

1. PDF and paper Submittals: Architect and Engineer will indicate, via markup on each submittal, the appropriate action, as follows:

a. APPROVED

1) THIS APPROVAL IS FOR GENERAL ARRANGEMENT ONLY. THE ARCHITECT DOES NOT ASSUME RESPONSIBILITY FOR QUANTITIES, DIMENSIONS, NOR DEVIATIONS FROM THE CONTRACT DOCUMENTS.

b. APPROVED AS NOTED
c. NOT APPROVED
d. REVISE AND RESUBMIT

B. Informational Submittals: Architect and Engineer will review each submittal and will not return it or will return it if it does not comply with requirements. Architect and Engineer will forward each submittal to appropriate party.

C. Partial submittals prepared for a portion of the Work will be reviewed when use of partial submittals has received prior approval from Architect and Engineer.

D. Incomplete submittals are unacceptable, will be considered nonresponsive, and will be returned for resubmittal without review.

E. Architect and Engineer will return without review submittals received from sources other than Contractor.

F. Submittals not required by the Contract Documents will be returned by Architect without action.

PART 2 - PRODUCTS (Not Used)

PART 3 - EXECUTION (Not Used)

END OF SECTION 013300

This page intentionally left blank.

SCHEDULE OF MATERIAL SUBMITTALS
List Is provided for informational purposes. It is the Contractor's responsibilities to make sure ALL submittals listed in the specifications are submitted even if they have been omitted from this list.

PROJECT NUMBER	PROJECT TITLE	PROJECT LOCATION
3225600-201530.01	Terminal Building Entrance Vestibule Replacement	Erie International Airport, Erie, PA

TO BE COMPLETED BY CONTRACT ADMINISTRATOR

PROJECT DESCRIPTION
Required Submittal
Date Reference Key

1. Pre-Construction Meeting
2. As Required
3. See Specification Section
4. NLT than +15 business days of required approval
5. NLT than +10 business days of site delivery
6. NLT than +10 business days of commencement of work
7. NLT than +15 business days of commencement of work
8. NLT than +5 business days of inspection
9. NLT than +2 business of Pre-Final Inspection

Electronic Submittal Required, Unless Noted Otherwise | Submittals | Closeout | STATUS CODE

LINE NUMBER	RESPONSIBLE REVIEWER	TYPE OF SUBMITTAL	Submittal ID #	ITEM OR DESCRIPTION OF ITEM, CONTRACT REFERENCE, TYPE OF SUBMITTAL TYPES OF SUBMITTALS A = ACTION SUBMITTAL I = INFORMATIONAL SUBMITTAL C = CLOSEOUT SUBMITTAL		PRODUCT DATA	SHOP DRAWINGS	SAMPLES	COLOR SELECTION	MANUFACTURER'S RECOMMENDATIONS	MANUFACTURER'S QUALIFICATIONS	INSTALLER'S QUALIFICATIONS	PRODUCT TEST REPORTS	FIELD QUALITY-CONTROL TEST REPORTS	OTHER SPECIFIED MATERIALS, DATA, OR SCHEDULES	OPERATING AND MAINTENANCE INSTRUCTIONS	MANUFACTURER'S WARRANTY	OTHER SPECIFIED MATERIALS, DATA, OR SCHEDULES	REQUIRED SUBMITTAL DATE	SUBMITTAL NUMBER (SPEC. SECTION NUMBER-0XX) 000000-000	CONTRACTOR SUBMITTAL DATE	A/E REVIEW DATE	ARNG COR REVIEW DATE	No Exceptions Taken	Furnish as Corrected	Revise and Resubmit	Acknowledge Receipt	Reject	Not Required	REMARKS
				012100 - Allowances																												
1	PM	A	012100.A.01	1.3.A	Invoice Copy for Purchase of Building Permit																											
2	PM	I	012100.I.01	1.4.A	Coordinate Building Permit Submittals for Allowance Items																											
				012500 - Substitution Procedures																												
3	PM	A	012500.A.01	1.4.A	Substitution Requests																											
				013100 - Project Management and Coordination																												
4	PM	I	013100.I.01	1.4.A	Subcontract List																											
5	PM	I		1.4.B	Key Personnel Names																											
				013516 - Alteration Project Procedures																												
6	PM	I	013516.I.01	1.7.A	Alteration Work Subschedule																											
7	PM	I		1.7.B	Preconstruction Documentation																											
8	PM	I		1.7.C	Alteration Work Program																											
9	PM	I		1.7.D	Fire-Prevention Plan																											
				014000 - Quality Requirements																												
10	PM	A	014000.A.01	1.6.A	Shop Drawings																											
11	PM	A		1.6.B	Delegated-Design Services Submittal																											
12	PM	I	014000.I.01	1.7.A	Contractor's Quality-Control Plan																											
13	PM	I		1.7.B	Qualification Data																											
14	PM	I		1.7.C	Contractor's Statement of Responsibility																											
15	PM	I		1.7.D	Testing Agency Qualifications																											
16	PM	I		1.7.E	Schedule of Tests and Inspections																											
17	PM	I	014000.I.02	1.7.F	Reports																											
18	PM	I	014000.I.03	1.7.G	Permits, Licenses, and Certificates																											
				015000 - Temporary Facilities and Controls																												
19	PM	I	015000.I.01	1.4.A	Project Identification and Temporary Signs																											
20	PM	I		1.4.B	Fire-Safety Program																											
21	PM	I		1.4.C	Moisture and Mold Protection Plan																											
22	PM	I		1.4.D	Dust and HVAC Control Plan																											
				017700 - Closeout Procedures																												
23	PM	A	017700.A.01	1.3.A	Product Data																											
24	PM	A		1.3.B	Contractor's List of Incomplete Items																											
25	PM	A		1.3.C	Certified List of Incomplete Items																											
26	PM	C	017700.C.01	1.4.A	Certificates of Release																											
27	PM	C		1.4.B	Certificate of Insurance																											
28	PM	C		1.5.A	Schedule of Maintenance Material Items																											
				017839 - Project Record Documents																												
29	PM	C	017839.A.01	1.3.A	Record Drawings																											
30	PM	C		1.3.B	Record Specifications																											
31	PM	C		1.3.C	Record Product Data																											
32	PM	C		1.3.D	Miscellaneous Record Submittals																											
				024119 - Selective Demolition																												
33	Arch	I	024119.A.01	1.6.A	Qualification Data																											
34	Arch	I		1.6.B	Engineering Survey																											
35	Arch	I		1.6.C	Proposed Protection Measures																											
36	Arch	I		1.6.D	Schedule of Selective Demolition Activities																											
37	Arch	I		1.6.E	Pre-demolition Photographs or Video																											
38	Arch	I		1.6.F	Statement of Refrigerant Recovery																											
39	Arch	I		1.6.G	Warranties																											
38	Struct	C	024119.C.01	1.7.A	Inventory																											

SCHEDULE OF MATERIAL SUBMITTALS
List Is provided for informational purposes. It is the Contractor's responsibilities to make sure ALL submittals listed in the specifications are submitted even if they have been omitted from this list.

PROJECT NUMBER	PROJECT TITLE	PROJECT LOCATION
3225600-201530.01	Terminal Building Entrance Vestibule Replacement	Erie International Airport, Erie, PA

TO BE COMPLETED BY CONTRACT ADMINISTRATOR

PROJECT DESCRIPTION
Required Submittal
Date Reference Key

1. Pre-Construction Meeting
2. As Required
3. See Specification Section
4. NLT than +15 business days of required approval
5. NLT than +10 business days of site delivery
6. NLT than +10 business days of commencement of work
7. NLT than +15 business days of commencement of work
8. NLT than +5 business days of inspection
9. NLT than +2 business of Pre-Final Inspection

Electronic Submittal Required, Unless Noted Otherwise | Submittals | Closeout | STATUS CODE

LINE NUMBER	RESPONSIBLE REVIEWER	TYPE OF SUBMITTAL	Submittal ID #	ITEM OR DESCRIPTION OF ITEM, CONTRACT REFERENCE, TYPE OF SUBMITTAL TYPES OF SUBMITTALS A = ACTION SUBMITTAL I = INFORMATIONAL SUBMITTAL C = CLOSEOUT SUBMITTAL		PRODUCT DATA	SHOP DRAWINGS	SAMPLES	COLOR SELECTION	MANUFACTURER'S RECOMMENDATIONS	MANUFACTURER'S QUALIFICATIONS	INSTALLER'S QUALIFICATIONS	PRODUCT TEST REPORTS	FIELD QUALITY-CONTROL TEST REPORTS	OTHER SPECIFIED MATERIALS, DATA, OR SCHEDULES	OPERATING AND MAINTENANCE INSTRUCTIONS	MANUFACTURER'S WARRANTY	OTHER SPECIFIED MATERIALS, DATA, OR SCHEDULES	REQUIRED SUBMITTAL DATE	SUBMITTAL NUMBER (SPEC. SECTION NUMBER-0XX) 000000-000	CONTRACTOR SUBMITTAL DATE	A/E REVIEW DATE	ARNG COR REVIEW DATE	No Exceptions Taken	Furnish as Corrected	Revise and Resubmit	Acknowledge Receipt	Reject	Not Required	REMARKS
				032000 - Concrete Reinforcing																												
29	Struct	A	032000.A.01	1.2.A	Product Data																										
40	Struct	A		1.2.B	Shop Drawings																										
41	Struct	A		1.2.C	Construction Joint Layout																										
42	Struct	I	032000.I.01	1.3.A	Welding Certificates																										
43	Struct	I		1.3.B	Material Certificates																										
44	Struct	I		1.3.C	Material Test Reports																										
45	Struct	I	032000.I.02*	1.3.D	Field Quality Control Reports																										
46	Struct	I	032000.I.03	1.3.E	Minutes of Preinstallation Conference																										
				033000 - Cast-in-Place Concrete																												
40	Struct	A	033000.A.01	1.4.A	Product Data																										
47	Struct	A		1.4.B	Design Mixtures																										
48	Struct	A		1.4.C	Shop Drawings																										
49	Struct	A		1.4.D	Concrete Schedule																										
50	Struct	I	033000.I.01	1.5.A	Material Certificates																										
51	Struct	I		1.5.B	Material Test Reports																										
52	Struct	I		1.5.C	Research Reports																										
53	Struct	I	033000.I.02	1.5.D	Preconstruction Test Reports																										
54	Struct	I	033000.I.02*	1.5E	Field Quality Control Reports																										
55	Struct	I	033000.I.03	1.5.F	Minutes of Preinstallation Conference																										
				051200 - Structural Steel Framing																												
56	Struct	A	051200.A.01	1.4.A	Product Data																										
57	Struct	A		1.4.B	Shop Drawings																										
58	Struct	A		1.4.C	Delegated-Design Submittal																										
59	Struct	I	051200.I.01	1.5.A	Welding Certificates																										
60	Struct	I		1.5.B	Mill Test Reports																										
61	Struct	I		1.5.C	Source Quality Control Reports																										
62	Struct	I	051200.I.02*	1.5.D	Field Quality Control Reports																										
				053100 - Steel Decking																												
63	Struct	A	053100.A.01	1.2.A	Product Data																										
64	Struct	A		1.2.B	Shop Drawings																										
65	Struct	I	053100.I.01	1.3.A	Welding Certificates																										
66	Struct	I		1.3.B	Product Certificates																										
67	Struct	I		1.3.C	Evaluation Reports																										
68	Struct	I		1.3.D	Field Quality Control Reports																										
				054000 - Cold-formed Metal Framing																												
69	Struct	A	054000.A.01	1.3.A	Product Data																										
70	Struct	A		1.3.B	Shop Drawings																										
71	Struct	I	054000.I.01	1.4.A	Welding Certificates																										
72	Struct	I		1.4.B	Product Certificates																										
73	Struct	I		1.4.C	Product Test Reports																										
74	Struct	I		1.4.D	Evaluation Reports																										
				061053 - Miscellaneous Rough Carpentry																												
75	Struct	A	061053.A.01	1.2.A	Product Data																										
76	Struct	I	061053.I.01	1.3.A	Evaluation Reports																										
				061600 - Sheathing																												
77	Struct	A	061600.A.01	1.2.A	Product Data																										
				072100 - Thermal Insulation																												
78	Struct	A	072100.A.01	1.2.A	Product Data																										
79	Struct	I	072100.I.01	1.3.A	Product Test Reports																										
80	Struct	I		1.3.B	Research Reports																										
				072726 - Fluid-Applied Membrane Air Barriers																												
81	Struct	A	072726.A.01	1.3.A	Product Data																										
82	Struct	A		1.3.B	Shop Drawings																										
83	Struct	I	072726.I.01	1.4.A	Product Certificates																										
84	Struct	I		1.4.B	Product Test Reports																										
85	Struct	I	072726.I.02*	1.4.C	Field Quality Control Reports																										
				074213 - Aluminum Composite Panels																												
86	Struct	A	074213.A.01	1.3.A	Product Data																										
87	Struct	A		1.3.B	Shop Drawings																										
88	Struct	A		1.3.C	Samples																										
89	Struct	I	074213.I.01	1.4.A	Product Test Reports																										
90	Struct	I		1.4.B	Warranties																										
91	Struct	C	074213.C.01	1.5.A	Maintenance Data																										

SCHEDULE OF MATERIAL SUBMITTALS
List Is provided for informational purposes. It is the Contractor's responsibilities to make sure ALL submittals listed in the specifications are submitted even if they have been omitted from this list.

PROJECT NUMBER	PROJECT TITLE	PROJECT LOCATION
3225600-201530.01	Terminal Building Entrance Vestibule Replacement	Erie International Airport, Erie, PA

TO BE COMPLETED BY CONTRACT ADMINISTRATOR

PROJECT DESCRIPTION
Required Submittal
Date Reference Key

1. Pre-Construction Meeting
2. As Required
3. See Specification Section
4. NLT than +15 business days of required approval
5. NLT than +10 business days of site delivery
6. NLT than +10 business days of commencement of work
7. NLT than +15 business days of commencement of work
8. NLT than +5 business days of inspection
9. NLT than +2 business of Pre-Final Inspection

Electronic Submittal Required, Unless Noted Otherwise | Submittals | Closeout | STATUS CODE

LINE NUMBER	RESPONSIBLE REVIEWER	TYPE OF SUBMITTAL	Submittal ID #	ITEM OR DESCRIPTION OF ITEM, CONTRACT REFERENCE, TYPE OF SUBMITTAL TYPES OF SUBMITTALS A = ACTION SUBMITTAL I = INFORMATIONAL SUBMITTAL C = CLOSEOUT SUBMITTAL		PRODUCT DATA	SHOP DRAWINGS	SAMPLES	COLOR SELECTION	MANUFACTURER'S RECOMMENDATIONS	MANUFACTURER'S QUALIFICATIONS	INSTALLER'S QUALIFICATIONS	PRODUCT TEST REPORTS	FIELD QUALITY-CONTROL TEST REPORTS	OTHER SPECIFIED MATERIALS, DATA, OR SCHEDULES	OPERATING AND MAINTENANCE INSTRUCTIONS	MANUFACTURER'S WARRANTY	OTHER SPECIFIED MATERIALS, DATA, OR SCHEDULES	REQUIRED SUBMITTAL DATE	SUBMITTAL NUMBER (SPEC. SECTION NUMBER-0XX) 000000-000	CONTRACTOR SUBMITTAL DATE	A/E REVIEW DATE	ARNG COR REVIEW DATE	No Exceptions Taken	Furnish as Corrected	Revise and Resubmit	Acknowledge Receipt	Reject	Not Required	REMARKS
				076200 - Sheet Metal Flashing and Trim																												
92	Struct	A	076200.A.01	1.5.A	Product Data																											
93	Struct	A		1.5.B	Shop Drawings																											
94	Struct	I	076200.I.01	1.6.A	Qualification Data																											
95	Struct	I		1.6.B	Product Certificates																											
96	Struct	I		1.6.C	Product Test Reports																											
96	Struct	I		1.6.D	Evaluation Reports																											
97	Struct	I		1.6.E	Sample Warranty																											
				078413 - Penetration and Joint Firestopping																												
98	Struct	A	078413.A.01	1.3.A	Product Data																											
99	Struct	A		1.3.B	Product Schedule																											
100	Struct	I	078413.I.01	1.4.A	Qualification Data																											
101	Struct	I		1.4.B	Product Test Reports																											
102	Struct	C	078413.C.01	1.5.A	Installer Certificates																											
				079200 - Joint Sealants																												
103	Struct	A	079200.A.01	1.3.A	Product Data																											
104	Struct	A		1.3.B	Samples for Initial Selection																											
105	Struct	A		1.3.C	Joint Sealant Schedule																											
				081113 - Hollow Metal Doors and Frames																												
106	Struct	A	081113.A.01	1.3.A	Product Data																											
107	Struct	A		1.3.B	Shop Drawings																											
108	Struct	A		1.3.C	Product Schedule																											
				087100 - Door Hardware																												
109	Struct	A	087100.A.01	1.4.B.1	Product Data																											
110	Struct	A		1.4.B.2	Samples for Verification																											
111	Struct	A		1.4.B.3	Door Hardware Schedule																											
112	Struct	A		1.4.B.4	Key Schedule																											
113	Struct	A		1.4.B.5	Templates																											
114	Struct	I	087100.I.01	1.4.C.1	Qualification Data																											
115	Struct	I		1.4.C.2	Product Data																											
116	Struct	I		1.4.C.3	Certificates of Compliance																											
117	Struct	I		1.4.C.4	Warranty																											
118	Struct	C	087100.C.01	1.4.D.1	Operations and Maintenance Data																											
				092900 - Gypsum Board																												
119	Arch	A	092900.A.01	1.2.A	Product Data																											
				096513 - Resilient Base and Accessories																												
120	Arch	A	096513.A.01	1.3.A	Product Data																											
121	Arch	A		1.3.B	Samples																											
122	Arch	A		1.3.C	Samples for Initial Selection																											
123	Arch	A		1.3.D	Samples for Verification																											
124	Arch	A		1.3.E	Product Schedule																											
125	Arch	C	096513.C.01	1.4.A	Extra Materials																											
				099113 - Exterior Painting																												
126	Arch	A	099113.A.01	1.3.A	Product Data																											
127	Arch	A		1.3.B	Samples																											
				099123 - Interior Painting																												
128	Arch	A	099123.A.01	1.3.A	Product Data																											
129	Arch	A		1.3.B	Samples																											
				101423 - Room-Identification Signage																												
130	Arch	A	101423.A.01	1.5.A	Product Data																											
131	Arch	A		1.5.B	Shop Drawings																											
132	Arch	A		1.5.C	Samples for Initial Selection																											
133	Arch	A	101423.A.02	1.5.D	Samples for Verification																											
134	Arch	A		1.5.E	Product Schedule																											
135	Arch	I	101423.I.01	1.6.A	Qualification Data																											
136	Arch	I		1.6.B	Samples Warranty																											
137	Arch	C	101423.C.01	1.7.A	Maintenance Data																											
				260519 - Low-Voltage Electrical Power Conductors and Cables																												
138	Elec	A	260519.A.01	1.5.A	Shop Drawings, Product Data, and Samples																											
139	Elec	A		1.5.B	Samples																											

SCHEDULE OF MATERIAL SUBMITTALS
List Is provided for informational purposes. It is the Contractor's responsibilities to make sure ALL submittals listed in the specifications are submitted even if they have been omitted from this list.

PROJECT NUMBER	PROJECT TITLE	PROJECT LOCATION
3225600-201530.01	Terminal Building Entrance Vestibule Replacement	Erie International Airport, Erie, PA

TO BE COMPLETED BY CONTRACT ADMINISTRATOR

PROJECT DESCRIPTION
Required Submittal
Date Reference Key

1. Pre-Construction Meeting
2. As Required
3. See Specification Section
4. NLT than +15 business days of required approval
5. NLT than +10 business days of site delivery
6. NLT than +10 business days of commencement of work
7. NLT than +15 business days of commencement of work
8. NLT than +5 business days of inspection
9. NLT than +2 business of Pre-Final Inspection

Electronic Submittal Required, Unless Noted Otherwise						Submittals										Closeout								STATUS CODE						
LINE NUMBER	RESPONSIBLE REVIEWER	TYPE OF SUBMITTAL	Submittal ID #	ITEM OR DESCRIPTION OF ITEM, CONTRACT REFERENCE, TYPE OF SUBMITTAL TYPES OF SUBMITTALS A = ACTION SUBMITTAL I = INFORMATIONAL SUBMITTAL C = CLOSEOUT SUBMITTAL		PRODUCT DATA	SHOP DRAWINGS	SAMPLES	COLOR SELECTION	MANUFACTURER'S RECOMMENDATIONS	MANUFACTURER'S QUALIFICATIONS	INSTALLER'S QUALIFICATIONS	PRODUCT TEST REPORTS	FIELD QUALITY-CONTROL TEST REPORTS	OTHER SPECIFIED MATERIALS, DATA, OR SCHEDULES	OPERATING AND MAINTENANCE INSTRUCTIONS	MANUFACTURER'S WARRANTY	OTHER SPECIFIED MATERIALS, DATA, OR SCHEDULES	REQUIRED SUBMITTAL DATE	SUBMITTAL NUMBER (SPEC. SECTION NUMBER-0XX) 000000-000	CONTRACTOR SUBMITTAL DATE	A/E REVIEW DATE	ARNG COR REVIEW DATE	No Exceptions Taken	Furnish as Corrected	Revise and Resubmit	Acknowledge Receipt	Reject	Not Required	REMARKS
				260526 - Grounding and Bonding for Electrical Systems																												
140	Elec	A	260526.A.01	1.5.B	Product Data																											
141	Elec	A		1.5.C	Test Reports																											
142	Elec	A		1.5.D	Manufacturer's Instructions																											
				260529 - Hangers and Supports for Electrical Systems																												
143	Elec	A	260529.A.01	1.4.B	Product Data																											
144	Elec	A		1.4.C	Manufacturer's Instructions																											
				260532 - Boxes																												
145	Elec	A	260532.A.01	1.5.A.1	Product Data																											
				260533 - Conduit																												
146	Elec	A	260533.A.01	1.5.B	Product Data																											
				260553 - Identification for Electrical Systems																												
147	Elec	A	260553.A.01	1.5.A	Shop Drawings																											
148	Elec	A		1.5.B	Nameplates and Tape Labels																											
				260573 - Overcurrent Protective Device Coordination																												
149	Elec	A	260573.A.01	1.5.B	Product Data																											
150	Elec	A		1.5.C	Product Certificates																											
151	Elec	A	260573.A.02	1.5.D	Qualification Data																											
152	Elec	A		1.5.E	Study submitted or Approval																											
153	Elec	A	260573.A.03	1.5.F	Report																											
				262213 - Low Voltage Transformers																												
154	Elec	A	262213.A.01	1.5.A	Shop Drawings and Product Data																											
155	Elec	A		1.5.B	Manufacturer's Literature																											
				262413 - Switchboards																												
156	Elec	A	262413.A.01	1.4.A	Product Data, Wiring Diagrams, Test Reports																											
157	Elec	C	262413.C.01	1.4.B	Operations and Maintenance Data																											
				262716 - Electrical Cabinets and Enclosures																												
158	Elec	A	262716.A.01	1.5.B	Product Data																											
159	Elec	A		1.5.C	Manufacturer Instructions																											
				280500 - Common Work Results for Electronic Safety and Security Systems																												
160	Elec	A	280500.A.01	1.3.A	Product Data																											
				280513 - Conductors and Cables for Electronic Safety and Security Systems																												
161	Elec	A	280513.A.01	1.3.A	Product Data																											
162	Elec	A		1.3.B	Shop Drawings																											
163	Elec	A		1.3.C	Qualification Data																											
164	Elec	A		1.3.D	Source Quality Control Reports																											
165	Elec	I	280513.I.01	1.3.E	Field Quality Control Reports																											
166	Elec	C	280513.C.01	1.3.F	Maintenance Data																											
				312000 - Earth Moving																												
167	Elec	A	312000.A.01	1.4.A	Material Test Reports																											
				315000 - Excavation Support and Protection																												
168	Elec	A	315000.A.01	1.3.A	Shop Drawings																											
169	Elec	A		1.3.B	Delegated-Design Submittal																											
170	Elec	I	315000.I.01	1.4.A	Qualification Data																											
171	Elec	I		1.4.B	Contractor Calculations																											
172	Elec	I		1.4.C	Existing Conditions																											
172	Elec	C	315000.C.01	1.5.A	Record Drawings																											

SECTION 013516 - ALTERATION PROJECT PROCEDURES

PART 1 - GENERAL

1.1 RELATED DOCUMENTS

A. Drawings and general provisions of the Contract, including General and Supplementary Conditions and Division 01 Specification Sections, apply to this Section.

1.2 SUMMARY

A. Section includes special procedures for alteration work.

1.3 DEFINITIONS

A. Alteration Work: This term includes remodeling, renovation, repair, and maintenance work performed within existing spaces or on existing surfaces as part of the Project.

B. Consolidate: To strengthen loose or deteriorated materials in place.

C. Design Reference Sample: A sample that represents the Architect's prebid selection of work to be matched; it may be existing work or work specially produced for the Project.

D. Dismantle: To remove by disassembling or detaching an item from a surface, using gentle methods and equipment to prevent damage to the item and surfaces; disposing of items unless indicated to be salvaged or reinstalled.

E. Match: To blend with adjacent construction and manifest no apparent difference in material type, species, cut, form, detail, color, grain, texture, or finish, as approved by Architect.

F. Refinish: To remove existing finishes to base material and apply new finish to match original, or as otherwise indicated.

G. Repair: To correct damage and defects, retaining existing materials, features, and finishes. This includes patching, piecing-in, splicing, consolidating, or otherwise reinforcing or upgrading materials.

H. Replace: To remove, duplicate, and reinstall entire item with new material. The original item is the pattern for creating duplicates unless otherwise indicated.

I. Replicate: To reproduce in exact detail, materials, and finish unless otherwise indicated.

J. Reproduce: To fabricate a new item, accurate in detail to the original, and from either the same or a similar material as the original, unless otherwise indicated.

K. Retain: To keep existing items that are not to be removed or dismantled.

L. Strip: To remove existing finish down to base material unless otherwise indicated.

1.4 COORDINATION

A. Alteration Work Subschedule: A construction schedule coordinating the sequencing and scheduling of alteration work for entire Project, including each activity to be performed, and based on Contractor's Construction Schedule. Secure time commitments for performing critical construction activities from separate entities responsible for alteration work.

1. Schedule construction operations in sequence required to obtain best Work results.
2. Coordinate sequence of alteration work activities to accommodate the following:

    a. Owner's continuing occupancy of portions of existing building.
    b. Owner's partial occupancy of completed Work.
    c. Other known work in progress.
    d. Tests and inspections.

3. Detail sequence of alteration work, with start and end dates.
4. Utility Services: Indicate how long utility services will be interrupted. Coordinate shutoff, capping, and continuation of utility services.
5. Use of elevator and stairs.
6. Equipment Data: List gross loaded weight, axle-load distribution, and wheel-base dimension data for mobile and heavy equipment proposed for use in existing structure. Do not use such equipment without certification from Contractor's professional engineer that the structure can support the imposed loadings without damage.

B. Pedestrian, Aircraft and Vehicular Circulation: Coordinate alteration work with circulation patterns within Project building(s) and site. Some work is near circulation patterns and adjacent to restricted areas. Circulation patterns cannot be closed off entirely and in places can be only temporarily redirected around small areas of work. Access to restricted areas may not be obstructed. Plan and execute the Work accordingly.

1.5 PROJECT MEETINGS FOR ALTERATION WORK

A. Preliminary Conference for Alteration Work: Before starting alteration work, conduct conference at Project site.

1. Attendees: In addition to representatives of Owner, Engineer, Architect, and Contractor, testing service representative, specialists, and chemical-cleaner manufacturer(s) shall be represented at the meeting.
2. Agenda: Discuss items of significance that could affect progress of alteration work, including review of the following:

    a. Alteration Work Subschedule: Discuss and finalize; verify availability of materials, specialists' personnel, equipment, and facilities needed to make progress and avoid delays.
    b. Fire-prevention plan.
    c. Governing regulations.
    d. Areas where existing construction is to remain and the required protection.

e. Hauling routes.
f. Sequence of alteration work operations.
g. Storage, protection, and accounting for salvaged and specially fabricated items.
h. Existing conditions, staging, and structural loading limitations of areas where materials are stored.
i. Qualifications of personnel assigned to alteration work and assigned duties.
j. Requirements for extent and quality of work, tolerances, and required clearances.
k. Embedded work such as flashings and lintels, special details, collection of waste, protection of occupants and the public, and condition of other construction that affects the Work or will affect the work.

3. Reporting: Record conference results and distribute copies to everyone in attendance and to others affected by decisions or actions resulting from conference.

B. Coordination Meetings: Conduct coordination meetings specifically for alteration work at weekly intervals. Coordination meetings are in addition to specific meetings held for other purposes, such as progress meetings and preinstallation conferences.

1. Attendees: In addition to representatives of Contractor, each specialist, supplier, installer, and other entity concerned with progress or involved in planning, coordination, or performance of alteration work activities shall be represented at these meetings. All participants at conference shall be familiar with Project and authorized to conclude matters relating to alteration work.
2. Agenda: Review and correct or approve minutes of previous coordination meeting. Review other items of significance that could affect progress of alteration work. Include topics for discussion as appropriate to status of Project.

a. Alteration Work Subschedule: Review progress since last coordination meeting. Determine whether each schedule item is on time, ahead of schedule, or behind schedule. Determine how construction behind schedule will be expedited with retention of quality; secure commitments from parties involved to do so. Discuss whether schedule revisions are required to ensure that current and subsequent activities are completed within the Contract Time.
b. Schedule Updating: Revise Contractor's Alteration Work Subschedule after each coordination meeting where revisions to schedule have been made or recognized. Issue revised schedule concurrently with report of each meeting.
c. Review present and future needs of each entity present, including review items listed in the "Preliminary Conference for Alteration Work" Paragraph in this article and the following:

1) Interface requirements of alteration work with other Project Work.
2) Status of submittals for alteration work.
3) Access to alteration work locations.
4) Effectiveness of fire-prevention plan.
5) Quality and work standards of alteration work.

6) Change Orders for alteration work.

3. Reporting: Record meeting results and distribute copies to everyone in attendance and to others affected by decisions or actions resulting from each meeting.

1.6 MATERIALS OWNERSHIP

A. Historic items, relics, and similar objects including, but not limited to, cornerstones and their contents, commemorative plaques and tablets, antiques, and other items of interest or value to Owner that may be encountered or uncovered during the Work, regardless of whether they were previously documented, remain Owner's property.

1. Carefully dismantle and salvage each item or object in a manner to prevent damage and protect it from damage, then promptly deliver it to Owner where directed at Project site.

1.7 INFORMATIONAL SUBMITTALS

A. Alteration Work Subschedule:

1. Submit alteration work subschedule within seven days of date established for commencement of alteration work.

B. Preconstruction Documentation: Show preexisting conditions of adjoining construction and site improvements that are to remain, including finish surfaces, that might be misconstrued as damage caused by Contractor's alteration work operations.

C. Alteration Work Program: Submit 30 before work begins.

D. Fire-Prevention Plan: Submit 30 before work begins.

1.8 QUALITY ASSURANCE

A. Specialist Qualifications: An experienced firm regularly engaged in specialty work similar in nature, materials, design, and extent to alteration work as specified in each Section and that has completed a minimum of five recent projects with a record of successful in-service performance that demonstrates the firm's qualifications to perform this work.

1. Field Supervisor Qualifications: Full-time supervisors experienced in specialty work similar in nature, material, design, and extent to that indicated for this Project. Supervisors shall be on-site when specialty work begins and during its progress. Supervisors shall not be changed during Project except for causes beyond the control of the specialist firm.

a. Construct new mockups of required work whenever a supervisor is replaced.

B. Alteration Work Program: Prepare a written plan for alteration work for whole Project, including each phase or process and protection of surrounding materials during operations. Show compliance with indicated methods and procedures specified in this

and other Sections. Coordinate this whole-Project alteration work program with specific requirements of programs required in other alteration work Sections.

1. Dust and Noise Control: Include locations of proposed temporary dust- and noise-control partitions and means of egress from occupied areas coordinated with continuing on-site operations and other known work in progress.
2. Debris Hauling: Include plans clearly marked to show debris hauling routes, turning radii, and locations and details of temporary protective barriers.

C. Fire-Prevention Plan: Prepare a written plan for preventing fires during the Work, including placement of fire extinguishers, fire blankets, rag buckets, and other fire-control devices during each phase or process. Coordinate plan with Owner's fire-protection equipment and requirements. Include fire-watch personnel's training, duties, and authority to enforce fire safety.

D. Safety and Health Standard: Comply with ANSI/ASSE A10.6.

1.9 STORAGE AND HANDLING OF SALVAGED MATERIALS

A. Salvaged Materials:

1. Clean loose dirt and debris from salvaged items unless more extensive cleaning is indicated.
2. Pack or crate items after cleaning; cushion against damage during handling. Label contents of containers.
3. Store items in a secure area until delivery to Owner.
4. Transport items to Owner's storage area designated by Owner.
5. Protect items from damage during transport and storage.

B. Salvaged Materials for Reinstallation:

1. Repair and clean items for reuse as indicated.
2. Pack or crate items after cleaning and repairing; cushion against damage during handling. Label contents of containers.
3. Protect items from damage during transport and storage.
4. Reinstall items in locations indicated. Comply with installation requirements for new materials and equipment unless otherwise indicated. Provide connections, supports, and miscellaneous materials to make items functional for use indicated.

C. Existing Materials to Remain: Protect construction indicated to remain against damage and soiling from construction work. Where permitted by Architect, items may be dismantled and taken to a suitable, protected storage location during construction work and reinstalled in their original locations after alteration and other construction work in the vicinity is complete.

D. Storage: Catalog and store items within a weathertight enclosure where they are protected from moisture, weather, condensation, and freezing temperatures.

1. Identify each item for reinstallation with a nonpermanent mark to document its original location. Indicate original locations on plans, elevations, sections, or photographs by annotating the identifying marks.

2. Secure stored materials to protect from theft.
3. Control humidity so that it does not exceed 85 percent. Maintain temperatures 5 deg F (3 deg C) or more above the dew point.

E. Storage Space:
1. Arrange for off-site locations for storage and protection of salvaged material that cannot be stored and protected on-site.

1.10 FIELD CONDITIONS

A. Survey of Existing Conditions: Record existing conditions that affect the Work by use of measured drawings preconstruction photographs.

B. Discrepancies: Notify Architect of discrepancies between existing conditions and Drawings before proceeding with removal and dismantling work.

C. Owner's Removals: Before beginning alteration work, verify in correspondence with Owner that the following items have been removed:

1. Furniture, fixtures, Airline signage and equipment.

D. Size Limitations in Existing Spaces: Materials, products, and equipment used for performing the Work and for transporting debris, materials, and products shall be of sizes that clear surfaces within existing spaces, areas, rooms, and openings, including temporary protection, by 12 inches (300 mm) or more.

PART 2 - PRODUCTS - (Not Used)

PART 3 - EXECUTION

3.1 PROTECTION

A. Protect persons, motor vehicles, surrounding surfaces of building, building site, plants, and surrounding buildings from harm resulting from alteration work.

1. Use only proven protection methods, appropriate to each area and surface being protected.
2. Provide temporary barricades, barriers, and directional signage to exclude the public from areas where alteration work is being performed.
3. Erect temporary barriers to form and maintain fire-egress routes.
4. Erect temporary protective covers over walkways and at points of pedestrian and vehicular entrance and exit that must remain in service during alteration work.
5. Contain dust and debris generated by alteration work and prevent it from reaching the public or adjacent surfaces.
6. Provide shoring, bracing, and supports as necessary. Do not overload structural elements.
7. Protect floors and other surfaces along hauling routes from damage, wear, and staining.

8. Provide supplemental sound-control treatment to isolate demolition work from other areas of the building.

B. Temporary Protection of Materials to Remain:

1. Protect existing materials with temporary protections and construction. Do not remove existing materials unless otherwise indicated.
2. Do not attach temporary protection to existing surfaces except as indicated as part of the alteration work program.

C. Comply with each product manufacturer's written instructions for protections and precautions. Protect against adverse effects of products and procedures on people and adjacent materials, components, and vegetation.

D. Utility and Communications Services:

1. Notify Owner, Architect, authorities having jurisdiction, and entities owning or controlling wires, conduits, pipes, and other services affected by alteration work before commencing operations.
2. Disconnect and cap pipes and services as required by authorities having jurisdiction, as required for alteration work.
3. Maintain existing services unless otherwise indicated; keep in service and protect against damage during operations. Provide temporary services during interruptions to existing utilities.

E. Existing Drains: Prior to the start of work in an area, test drainage system to ensure that it is functioning properly. Notify Architect immediately of inadequate drainage or blockage. Do not begin work in an area until the drainage system is functioning properly.

1. Prevent solids such as adhesive or mortar residue or other debris from entering the drainage system. Clean out drains and drain lines that become sluggish or blocked by sand or other materials resulting from alteration work.
2. Protect drains from pollutants. Block drains or filter out sediments, allowing only clean water to pass.

3.2 PROTECTION FROM FIRE

A. General: Follow fire-prevention plan and the following:

1. Comply with NFPA 241 requirements unless otherwise indicated.
2. Remove and keep area free of combustibles, including rubbish, paper, waste, and chemicals, unless necessary for the immediate work.

    a. If combustible material cannot be removed, provide fire blankets to cover such materials.

B. Heat-Generating Equipment and Combustible Materials: Comply with the following procedures while performing work with heat-generating equipment or combustible materials, including welding, torch-cutting, soldering, brazing, removing paint with heat, or other operations where open flames or implements using high heat or combustible solvents and chemicals are anticipated:

1. Obtain Owner's approval for operations involving use of open-flame or welding or other high-heat equipment. Notify Owner 72 hours before each occurrence, indicating location of such work.
2. As far as practicable, restrict heat-generating equipment to shop areas or outside the building.
3. Do not perform work with heat-generating equipment in or near rooms or in areas where flammable liquids or explosive vapors are present or thought to be present. Use a combustible gas indicator test to ensure that the area is safe.
4. Use fireproof baffles to prevent flames, sparks, hot gases, or other high-temperature material from reaching surrounding combustible material.
5. Prevent the spread of sparks and particles of hot metal through open windows, doors, holes, and cracks in floors, walls, ceilings, roofs, and other openings.
6. Fire Watch: Before working with heat-generating equipment or combustible materials, station personnel to serve as a fire watch at each location where such work is performed. Fire-watch personnel shall have the authority to enforce fire safety. Station fire watch according to NFPA 51B, NFPA 241, and as follows:

    a. Train each fire watch in the proper operation of fire-control equipment and alarms.
    b. Prohibit fire-watch personnel from other work that would be a distraction from fire-watch duties.
    c. Cease work with heat-generating equipment whenever fire-watch personnel are not present.
    d. Have fire-watch personnel perform final fire-safety inspection each day beginning no sooner than 30after conclusion of work in each area to detect hidden or smoldering fires and to ensure that proper fire prevention is maintained.
    e. Maintain fire-watch personnel at each area of Project site until 2 hours after conclusion of daily work.

C. Fire-Control Devices: Provide and maintain fire extinguishers, fire blankets, and rag buckets for disposal of rags with combustible liquids. Maintain each as suitable for the type of fire risk in each work area. Ensure that nearby personnel and the fire-watch personnel are trained in fire-extinguisher and blanket use.

D. Sprinklers: Where sprinkler protection exists and is functional, maintain it without interruption while operations are being performed. If operations are performed close to sprinklers, shield them temporarily with guards.

1. Remove temporary guards at the end of work shifts, whenever operations are paused, and when nearby work is complete.

3.3 PROTECTION DURING APPLICATION OF CHEMICALS

A. Protect motor vehicles, surrounding surfaces of building, building site, plants, and surrounding buildings from harm or spillage resulting from applications of chemicals and adhesives.

B. Cover adjacent surfaces with protective materials that are proven to resist chemicals selected for Project unless chemicals being used will not damage adjacent surfaces as indicated in alteration work program. Use covering materials and masking agents that

are waterproof and UV resistant and that will not stain or leave residue on surfaces to which they are applied. Apply protective materials according to manufacturer's written instructions. Do not apply liquid masking agents or adhesives to painted or porous surfaces. When no longer needed, promptly remove protective materials.

C. Do not apply chemicals during winds of sufficient force to spread them to unprotected surfaces.

D. Neutralize alkaline and acid wastes and legally dispose of off Owner's property.

E. Collect and dispose of runoff from chemical operations by legal means and in a manner that prevents soil contamination, soil erosion, undermining of paving and foundations, damage to landscaping, or water penetration into building interior.

3.4 GENERAL ALTERATION WORK

A. Have specialty work performed only by qualified specialists.

B. Ensure that supervisory personnel are present when work begins and during its progress.

C. Record existing work before each procedure (preconstruction), and record progress during the work. Use digital preconstruction documentation photographs.

D. Perform surveys of Project site as the Work progresses to detect hazards resulting from alterations.

E. Notify Architect of visible changes in the integrity of material or components whether from environmental causes including biological attack, UV degradation, freezing, or thawing or from structural defects including cracks, movement, or distortion.

1. Do not proceed with the work in question until directed by Architect.

END OF SECTION 013516

This page intentionally left blank.

SECTION 014000 - QUALITY REQUIREMENTS

PART 1 - GENERAL

1.1 RELATED DOCUMENTS

A. Drawings and general provisions of the Contract, including General and Supplementary Conditions and other Division 01 Specification Sections, apply to this Section.

1.2 SUMMARY

A. Section includes administrative and procedural requirements for quality assurance and quality control.

B. Testing and inspection services are required to verify compliance with requirements specified or indicated. These services do not relieve Contractor of responsibility for compliance with the Contract Document requirements.

1. Specific quality-assurance and quality-control requirements for individual work results are specified in their respective Specification Sections. Requirements in individual Sections may also cover production of standard products.
2. Specified tests, inspections, and related actions do not limit Contractor's other quality-assurance and quality-control procedures that facilitate compliance with the Contract Document requirements.
3. Requirements for Contractor to provide quality-assurance and quality-control services required by Architect, Owner, Engineer or authorities having jurisdiction are not limited by provisions of this Section.
4. Specific test and inspection requirements are not specified in this Section.

1.3 DEFINITIONS

A. Experienced: When used with an entity or individual, "experienced" unless otherwise further described means having successfully completed a minimum of five previous projects similar in nature, size, and extent to this Project; being familiar with special requirements indicated; and having complied with requirements of authorities having jurisdiction.

B. Field Quality-Control Tests: Tests and inspections that are performed on-site for installation of the Work and for completed Work.

C. Installer/Applicator/Erector: Contractor or another entity engaged by Contractor as an employee, Subcontractor, or Sub-subcontractor, to perform a particular construction operation, including installation, erection, application, assembly, and similar operations.

1. Use of trade-specific terminology in referring to a trade or entity does not require that certain construction activities be performed by accredited or unionized individuals, or that requirements specified apply exclusively to specific trade(s).

D. Mockups: Full-size physical assemblies that are constructed on-site either as freestanding temporary built elements or as part of permanent construction. Mockups

are constructed to verify selections made under Sample submittals; to demonstrate aesthetic effects and qualities of materials and execution; to review coordination, testing, or operation; to show interface between dissimilar materials; and to demonstrate compliance with specified installation tolerances. Mockups are not Samples. Unless otherwise indicated, approved mockups establish the standard by which the Work will be judged.

1. Laboratory Mockups: Full-size physical assemblies constructed and tested at testing facility to verify performance characteristics.
2. Integrated Exterior Mockups: Mockups of the exterior envelope constructed on-site as freestanding temporary built elements or as part of permanent construction, consisting of multiple products, assemblies, and subassemblies.
3. Room Mockups: Mockups of typical interior spaces complete with wall, floor, and ceiling finishes; doors; windows; millwork; casework; specialties; furnishings and equipment; and lighting.

E. Preconstruction Testing: Tests and inspections performed specifically for Project before products and materials are incorporated into the Work, to verify performance or compliance with specified criteria.

F. Product Tests: Tests and inspections that are performed by a nationally recognized testing laboratory (NRTL) according to 29 CFR 1910.7, by a testing agency accredited according to NIST's National Voluntary Laboratory Accreditation Program (NVLAP), or by a testing agency qualified to conduct product testing and acceptable to authorities having jurisdiction, to establish product performance and compliance with specified requirements.

G. Source Quality-Control Tests: Tests and inspections that are performed at the source; for example, plant, mill, factory, or shop.

H. Testing Agency: An entity engaged to perform specific tests, inspections, or both. Testing laboratory shall mean the same as testing agency.

I. Quality-Assurance Services: Activities, actions, and procedures performed before and during execution of the Work to guard against defects and deficiencies and substantiate that proposed construction will comply with requirements.

J. Quality-Control Services: Tests, inspections, procedures, and related actions during and after execution of the Work to evaluate that actual products incorporated into the Work and completed construction comply with requirements. Contractor's quality-control services do not include contract administration activities performed by Architect [or Construction Manager].

1.4 DELEGATED-DESIGN SERVICES

A. Performance and Design Criteria: Where professional design services or certifications by a design professional are specifically required of Contractor by the Contract Documents, provide products and systems complying with specific performance and design criteria indicated.

1. If criteria indicated are not sufficient to perform services or certification required, submit a written request for additional information to Architect.

1.5 CONFLICTING REQUIREMENTS

A. Conflicting Standards and Other Requirements: If compliance with two or more standards or requirements are specified and the standards or requirements establish different or conflicting requirements for minimum quantities or quality levels, comply with the most stringent requirement. Refer conflicting requirements that are different, but apparently equal, to Architect for direction before proceeding.

B. Minimum Quantity or Quality Levels: The quantity or quality level shown or specified shall be the minimum provided or performed. The actual installation may comply exactly with the minimum quantity or quality specified, or it may exceed the minimum within reasonable limits. To comply with these requirements, indicated numeric values are minimum or maximum, as appropriate, for the context of requirements. Refer uncertainties to Architect for a decision before proceeding.

1.6 ACTION SUBMITTALS

A. Shop Drawings: For mockups.

1. Include plans, sections, and elevations, indicating materials and size of mockup construction.
2. Indicate manufacturer and model number of individual components.
3. Provide axonometric drawings for conditions difficult to illustrate in two dimensions.

B. Delegated-Design Services Submittal: In addition to Shop Drawings, Product Data, and other required submittals, submit a statement signed and sealed by the responsible design professional, for each product and system specifically assigned to Contractor to be designed or certified by a design professional, indicating that the products and systems are in compliance with performance and design criteria indicated. Include list of codes, loads, and other factors used in performing these services.

1.7 INFORMATIONAL SUBMITTALS

A. Contractor's Quality-Control Plan: For quality-assurance and quality-control activities and responsibilities.

B. Qualification Data: For Contractor's quality-control personnel.

C. Contractor's Statement of Responsibility: When required by authorities having jurisdiction, submit copy of written statement of responsibility submitted to authorities having jurisdiction before starting work on the following systems:

1. Seismic-force-resisting system, designated seismic system, or component listed in the Statement of Special Inspections.
2. Main wind-force-resisting system or a wind-resisting component listed in the Statement of Special Inspections.

D. Testing Agency Qualifications: For testing agencies specified in "Quality Assurance" Article to demonstrate their capabilities and experience. Include proof of qualifications in the form of a recent report on the inspection of the testing agency by a recognized authority.

E. Schedule of Tests and Inspections: Prepare in tabular form and include the following:

1. Specification Section number and title.
2. Entity responsible for performing tests and inspections.
3. Description of test and inspection.
4. Identification of applicable standards.
5. Identification of test and inspection methods.
6. Number of tests and inspections required.
7. Time schedule or time span for tests and inspections.
8. Requirements for obtaining samples.
9. Unique characteristics of each quality-control service.

F. Reports: Prepare and submit certified written reports and documents as specified.

G. Permits, Licenses, and Certificates: For Owner's record, submit copies of permits, licenses, certifications, inspection reports, releases, jurisdictional settlements, notices, receipts for fee payments, judgments, correspondence, records, and similar documents established for compliance with standards and regulations bearing on performance of the Work.

1.8 CONTRACTOR'S QUALITY-CONTROL PLAN

A. Quality-Control Plan, General: Submit quality-control plan within 10 days of Notice to Proceed, and not less than 5 days prior to preconstruction conference. Submit in format acceptable to Architect. Identify personnel, procedures, controls, instructions, tests, records, and forms to be used to carry out Contractor's quality-assurance and quality-control responsibilities. Coordinate with Contractor's Construction Schedule.

B. Quality-Control Personnel Qualifications: Engage qualified personnel trained and experienced in managing and executing quality-assurance and quality-control procedures similar in nature and extent to those required for Project.

1. Project quality-control manager may also serve as Project superintendent.

C. Submittal Procedure: Describe procedures for ensuring compliance with requirements through review and management of submittal process. Indicate qualifications of personnel responsible for submittal review.

D. Testing and Inspection: In quality-control plan, include a comprehensive schedule of Work requiring testing or inspection, including the following:

1. Contractor-performed tests and inspections including Subcontractor-performed tests and inspections. Include required tests and inspections and Contractor-elected tests and inspections. Distinguish source quality-control tests and inspections from field quality-control tests and inspections.

2. Special inspections required by authorities having jurisdiction and indicated on the Statement of Special Inspections.
Engineer, or Owner-performed tests and inspections indicated in the Contract Documents, including tests and inspections indicated to be performed by Commissioning Authority].

E. Continuous Inspection of Workmanship: Describe process for continuous inspection during construction to identify and correct deficiencies in workmanship in addition to testing and inspection specified. Indicate types of corrective actions to be required to bring work into compliance with standards of workmanship established by Contract requirements and approved mockups.

F. Monitoring and Documentation: Maintain testing and inspection reports including log of approved and rejected results. Include work Architect has indicated as nonconforming or defective. Indicate corrective actions taken to bring nonconforming work into compliance with requirements. Comply with requirements of authorities having jurisdiction.

1.9 REPORTS AND DOCUMENTS

A. Test and Inspection Reports: Prepare and submit certified written reports specified in other Sections. Include the following:

1. Date of issue.
2. Project title and number.
3. Name, address, telephone number, and email address of testing agency.
4. Dates and locations of samples and tests or inspections.
5. Names of individuals making tests and inspections.
6. Description of the Work and test and inspection method.
7. Identification of product and Specification Section.
8. Complete test or inspection data.
9. Test and inspection results and an interpretation of test results.
10. Record of temperature and weather conditions at time of sample taking and testing and inspection.
11. Comments or professional opinion on whether tested or inspected Work complies with the Contract Document requirements.
12. Name and signature of laboratory inspector.
13. Recommendations on retesting and reinspecting.

B. Manufacturer's Technical Representative's Field Reports: Prepare written information documenting manufacturer's technical representative's tests and inspections specified in other Sections. Include the following:

1. Name, address, telephone number, and email address of technical representative making report.
2. Statement on condition of substrates and their acceptability for installation of product.
3. Statement that products at Project site comply with requirements.
4. Summary of installation procedures being followed, whether they comply with requirements and, if not, what corrective action was taken.
5. Results of operational and other tests and a statement of whether observed performance complies with requirements.

6. Statement whether conditions, products, and installation will affect warranty.
7. Other required items indicated in individual Specification Sections.

C. Factory-Authorized Service Representative's Reports: Prepare written information documenting manufacturer's factory-authorized service representative's tests and inspections specified in other Sections. Include the following:

1. Name, address, telephone number, and email address of factory-authorized service representative making report.
2. Statement that equipment complies with requirements.
3. Results of operational and other tests and a statement of whether observed performance complies with requirements.
4. Statement whether conditions, products, and installation will affect warranty.
5. Other required items indicated in individual Specification Sections.

1.10 QUALITY ASSURANCE

A. General: Qualifications paragraphs in this article establish the minimum qualification levels required; individual Specification Sections specify additional requirements.

B. Manufacturer Qualifications: A firm experienced in manufacturing products or systems similar to those indicated for this Project and with a record of successful in-service performance, as well as sufficient production capacity to produce required units. As applicable, procure products from manufacturers able to meet qualification requirements, warranty requirements, and technical or factory-authorized service representative requirements.

C. Fabricator Qualifications: A firm experienced in producing products similar to those indicated for this Project and with a record of successful in-service performance, as well as sufficient production capacity to produce required units.

D. Installer Qualifications: A firm or individual experienced in installing, erecting, applying, or assembling work similar in material, design, and extent to that indicated for this Project, whose work has resulted in construction with a record of successful in-service performance.

E. Professional Engineer Qualifications: A professional engineer who is legally qualified to practice in jurisdiction where Project is located and who is experienced in providing engineering services of the kind indicated. Engineering services are defined as those performed for installations of the system, assembly, or product that are similar in material, design, and extent to those indicated for this Project.

F. Specialists: Certain Specification Sections require that specific construction activities shall be performed by entities who are recognized experts in those operations. Specialists shall satisfy qualification requirements indicated and shall be engaged for the activities indicated.

1. Requirements of authorities having jurisdiction shall supersede requirements for specialists.

G. Testing Agency Qualifications: An NRTL, an NVLAP, or an independent agency with the experience and capability to conduct testing and inspection indicated, as documented according to ASTM E 329; and with additional qualifications specified in individual Sections; and, where required by authorities having jurisdiction, that is acceptable to authorities.

H. Manufacturer's Technical Representative Qualifications: An authorized representative of manufacturer who is trained and approved by manufacturer to observe and inspect installation of manufacturer's products that are similar in material, design, and extent to those indicated for this Project.

I. Factory-Authorized Service Representative Qualifications: An authorized representative of manufacturer who is trained and approved by manufacturer to inspect installation of manufacturer's products that are similar in material, design, and extent to those indicated for this Project.

J. Preconstruction Testing: Where testing agency is indicated to perform preconstruction testing for compliance with specified requirements for performance and test methods, comply with the following:

1. Contractor responsibilities include the following:

    a. Provide test specimens representative of proposed products and construction.
    b. Submit specimens in a timely manner with sufficient time for testing and analyzing results to prevent delaying the Work.
    c. Provide sizes and configurations of test assemblies, mockups, and laboratory mockups to adequately demonstrate capability of products to comply with performance requirements.
    d. Build site-assembled test assemblies and mockups using installers who will perform same tasks for Project.
    e. Build laboratory mockups at testing facility using personnel, products, and methods of construction indicated for the completed Work.
    f. When testing is complete, remove test specimens and test assemblies, and mockups, and laboratory mockups; do not reuse products on Project.

2. Testing Agency Responsibilities: Submit a certified written report of each test, inspection, and similar quality-assurance service to Architect and Engineer with copy to Contractor. Interpret tests and inspections and state in each report whether tested and inspected work complies with or deviates from the Contract Documents.

K. Mockups: Before installing portions of the Work requiring mockups, build mockups for each form of construction and finish required to comply with the following requirements, using materials indicated for the completed Work:

1. Build mockups of size indicated.
2. Build mockups in location indicated or, if not indicated, as directed by Architect or Engineer.
3. Notify Architect and Engineer 7 days in advance of dates and times when mockups will be constructed.

4. Employ supervisory personnel who will oversee mockup construction. Employ workers that will be employed to perform same tasks during the construction at Project.
5. Demonstrate the proposed range of aesthetic effects and workmanship.
6. Obtain Architect's and Engineer's approval of mockups before starting corresponding work, fabrication, or construction.

    a. Allow 7 days for initial review and each re-review of each mockup.

7. Maintain mockups during construction in an undisturbed condition as a standard for judging the completed Work.
8. Demolish and remove mockups when directed unless otherwise indicated.

L. Laboratory Mockups: Comply with requirements of preconstruction testing and those specified in individual Specification Sections.

1.11 QUALITY CONTROL

A. Owner Responsibilities: Where quality-control services are indicated as Owner's responsibility, Owner will engage a qualified testing agency to perform these services.

1. Owner will furnish Contractor with names, addresses, and telephone numbers of testing agencies engaged and a description of types of testing and inspection they are engaged to perform.
2. Payment for these services will be made from testing and inspection allowances, as authorized by Change Orders.
3. Costs for retesting and reinspecting construction that replaces or is necessitated by work that failed to comply with the Contract Documents will be charged to Contractor.

B. Contractor Responsibilities: Tests and inspections not explicitly assigned to Owner are Contractor's responsibility. Perform additional quality-control activities, whether specified or not, to verify and document that the Work complies with requirements.

1. Unless otherwise indicated, provide quality-control services specified and those required by authorities having jurisdiction. Perform quality-control services required of Contractor by authorities having jurisdiction, whether specified or not.
2. Engage a qualified testing agency to perform quality-control services.

    a. Contractor shall not employ same entity engaged by Owner, unless agreed to in writing by Owner.

3. Notify testing agencies at least 24 hours in advance of time when Work that requires testing or inspection will be performed.
4. Where quality-control services are indicated as Contractor's responsibility, submit a certified written report, in duplicate, of each quality-control service.
5. Testing and inspection requested by Contractor and not required by the Contract Documents are Contractor's responsibility.
6. Submit additional copies of each written report directly to authorities having jurisdiction, when they so direct.

C. Retesting/Reinspecting: Regardless of whether original tests or inspections were Contractor's responsibility, provide quality-control services, including retesting and reinspecting, for construction that replaced Work that failed to comply with the Contract Documents.

D. Testing Agency Responsibilities: Cooperate with Architect and Engineer and Contractor in performance of duties. Provide qualified personnel to perform required tests and inspections.

1. Notify Architect, Engineer and Contractor promptly of irregularities or deficiencies observed in the Work during performance of its services.
2. Determine the locations from which test samples will be taken and in which in-situ tests are conducted.
3. Conduct and interpret tests and inspections and state in each report whether tested and inspected work complies with or deviates from requirements.
4. Submit a certified written report, in duplicate, of each test, inspection, and similar quality-control service through Contractor.
5. Do not release, revoke, alter, or increase the Contract Document requirements or approve or accept any portion of the Work.
6. Do not perform duties of Contractor.

E. Manufacturer's Field Services: Where indicated, engage a factory-authorized service representative to inspect field-assembled components and equipment installation, including service connections. Report results in writing as specified in Section 013300 "Submittal Procedures."

F. Manufacturer's Technical Services: Where indicated, engage a manufacturer's technical representative to observe and inspect the Work. Manufacturer's technical representative's services include participation in preinstallation conferences, examination of substrates and conditions, verification of materials, observation of Installer activities, inspection of completed portions of the Work, and submittal of written reports.

G. Associated Contractor Services: Cooperate with agencies and representatives performing required tests, inspections, and similar quality-control services, and provide reasonable auxiliary services as requested. Notify agency sufficiently in advance of operations to permit assignment of personnel. Provide the following:

1. Access to the Work.
2. Incidental labor and facilities necessary to facilitate tests and inspections.
3. Adequate quantities of representative samples of materials that require testing and inspection. Assist agency in obtaining samples.
4. Facilities for storage and field curing of test samples.
5. Delivery of samples to testing agencies.
6. Preliminary design mix proposed for use for material mixes that require control by testing agency.
7. Security and protection for samples and for testing and inspection equipment at Project site.

H. Coordination: Coordinate sequence of activities to accommodate required quality-assurance and quality-control services with a minimum of delay and to avoid necessity of removing and replacing construction to accommodate testing and inspection.

1. Schedule times for tests, inspections, obtaining samples, and similar activities.

I. Schedule of Tests and Inspections: Prepare a schedule of tests, inspections, and similar quality-control services required by the Contract Documents. Coordinate and submit concurrently with Contractor's Construction Schedule. Update as the Work progresses.

1. Distribution: Distribute schedule to Owner, Architect, Engineer testing agencies, and each party involved in performance of portions of the Work where tests and inspections are required.

1.12 SPECIAL TESTS AND INSPECTIONS

A. Special Tests and Inspections: Owner will engage a qualified testing agency to conduct special tests and inspections required by authorities having jurisdiction as the responsibility of Owner and as follows:

1. Verifying that manufacturer maintains detailed fabrication and quality-control procedures and reviewing the completeness and adequacy of those procedures to perform the Work.
2. Notifying Architect, Engineer, and Contractor promptly of irregularities and deficiencies observed in the Work during performance of its services.
3. Submitting a certified written report of each test, inspection, and similar quality-control service to Architect and Engineer with copy to Contractor and to authorities having jurisdiction.
4. Submitting a final report of special tests and inspections at Substantial Completion, which includes a list of unresolved deficiencies.
5. Interpreting tests and inspections and stating in each report whether tested and inspected work complies with or deviates from the Contract Documents.
6. Retesting and reinspecting corrected work.

B. Special Tests and Inspections: Conducted by a qualified testing agency as required by authorities having jurisdiction, as indicated in individual Specification Sections and as follows:

1. Verifying that manufacturer maintains detailed fabrication and quality-control procedures and reviewing the completeness and adequacy of those procedures to perform the Work.
2. Notifying Architect, Engineer and Contractor promptly of irregularities and deficiencies observed in the Work during performance of its services.
3. Submitting a certified written report of each test, inspection, and similar quality-control service to Architect and Engineer with copy to Contractor and to authorities having jurisdiction.
4. Submitting a final report of special tests and inspections at Substantial Completion, which includes a list of unresolved deficiencies.
5. Interpreting tests and inspections and stating in each report whether tested and inspected work complies with or deviates from the Contract Documents.
6. Retesting and reinspecting corrected work.

PART 2 - PRODUCTS (Not Used)

PART 3 - EXECUTION

3.1 TEST AND INSPECTION LOG

A. Test and Inspection Log: Prepare a record of tests and inspections. Include the following:

1. Date test or inspection was conducted.
2. Description of the Work tested or inspected.
3. Date test or inspection results were transmitted to Architect.
4. Identification of testing agency or special inspector conducting test or inspection.

B. Maintain log at Project site. Post changes and revisions as they occur. Provide access to test and inspection log for Architect's, Engineer’s reference during normal working hours.

1. Submit log at Project closeout as part of Project Record Documents.

3.2 REPAIR AND PROTECTION

A. General: On completion of testing, inspection, sample taking, and similar services, repair damaged construction and restore substrates and finishes.

1. Provide materials and comply with installation requirements specified in other Specification Sections or matching existing substrates and finishes. Restore patched areas and extend restoration into adjoining areas with durable seams that are as invisible as possible. Comply with the Contract Document requirements for cutting and patching in Section 017300 "Execution."

B. Protect construction exposed by or for quality-control service activities.

C. Repair and protection are Contractor's responsibility, regardless of the assignment of responsibility for quality-control services.

END OF SECTION 014000

This page intentionally left blank.

SECTION 015000 - TEMPORARY FACILITIES AND CONTROLS

PART 1 - GENERAL

1.1 RELATED DOCUMENTS

A. Drawings and general provisions of the Contract, including General and Supplementary Conditions and other Division 01 Specification Sections, apply to this Section.

1.2 SUMMARY

A. Section includes requirements for temporary utilities, support facilities, and security and protection facilities.

B. Related Requirements:

1. Section 011000 "Summary" for work restrictions and limitations on utility interruptions.
2. Section 011200 "Multiple Contract Summary" for responsibilities for temporary facilities and controls for projects utilizing multiple contracts.

1.3 USE CHARGES

A. General: Installation and removal of temporary facilities shall be included in the Contract Sum unless otherwise indicated. Allow other entities engaged in the Project to use temporary services and facilities without cost, including, but not limited to, Owner's Architect, occupants of Project, testing agencies, and authorities having jurisdiction.

B. Water and Sewer Service from Existing System: Water from Owner's existing water system is available for use without metering and without payment of use charges. Provide connections and extensions of services as required for construction operations.

C. Electric Power Service from Existing System: Electric power from Owner's existing system is available for use without metering and without payment of use charges. Provide connections and extensions of services as required for construction operations.

D. Sewer, Water, and Electric Power Service: Use charges are specified in Section 011200 "Multiple Contract Summary."

1.4 INFORMATIONAL SUBMITTALS

A. Project Identification and Temporary Signs: Show fabrication and installation details, including plans, elevations, details, layouts, typestyles, graphic elements, and message content.

B. Fire-Safety Program: Show compliance with requirements of NFPA 241 and authorities having jurisdiction. Indicate Contractor personnel responsible for management of fire-prevention program.

C. Moisture- and Mold-Protection Plan: Describe procedures and controls for protecting materials and construction from water absorption and damage and mold.

D. Dust- and HVAC-Control Plan: Submit coordination drawing and narrative that indicates the dust- and HVAC-control measures proposed for use, proposed locations, and proposed time frame for their operation. Include the following:

1. Locations of dust-control partitions at each phase of work.
2. HVAC system isolation schematic drawing.
3. Location of proposed air-filtration system discharge.
4. Waste-handling procedures.
5. Other dust-control measures.

1.5 QUALITY ASSURANCE

A. Electric Service: Comply with NECA, NEMA, and UL standards and regulations for temporary electric service. Install service to comply with NFPA 70.

B. Tests and Inspections: Arrange for authorities having jurisdiction to test and inspect each temporary utility before use. Obtain required certifications and permits.

C. Accessible Temporary Egress: Comply with applicable provisions in the United States Access Board's ADA-ABA Accessibility Guidelines and ICC/ANSI A117.1.

1.6 PROJECT CONDITIONS

A. Temporary Use of Permanent Facilities: Engage Installer of each permanent service to assume responsibility for operation, maintenance, and protection of each permanent service during its use as a construction facility before Owner's acceptance, regardless of previously assigned responsibilities.

PART 2 - PRODUCTS

2.1 MATERIALS

A. Polyethylene Sheet: Reinforced, fire-resistive sheet, 10-mil (0.25-mm) minimum thickness, with flame-spread rating of 15 or less per ASTM E 84 and passing NFPA 701 Test Method 2.

B. Dust-Control Adhesive-Surface Walk-Off Mats: Provide mats minimum 36 by 60 inches (914 mm by 1524 mm).

C. Insulation: Unfaced mineral-fiber blanket, manufactured from glass, slag wool, or rock wool; with maximum flame-spread and smoke-developed indexes of 25 and 50, respectively.

2.2 TEMPORARY FACILITIES

A. Field Offices, General: Prefabricated or mobile units with serviceable finishes, temperature controls, and foundations adequate for normal loading.

B. Common-Use Field Office: Of sufficient size to accommodate needs of Owner, Architect, Engineer and construction personnel office activities and to accommodate Project

meetings specified in other Division 01 Sections. Keep office clean and orderly. Furnish and equip offices as follows:

1. Furniture required for Project-site documents including file cabinets, plan tables, plan racks, and bookcases.
2. Conference room of sufficient size to accommodate meetings of 20 individuals. Provide electrical power service and 120-V ac duplex receptacles, with no fewer than one receptacle on each wall. Furnish room with conference table, chairs, and 4-foot- (1.2-m-) square tack and marker boards.
3. Heating and cooling equipment necessary to maintain a uniform indoor temperature of 68 to 72 deg F (20 to 22 deg C).
4. Lighting fixtures capable of maintaining average illumination of 20 fc (215 lx) at desk height.

C. Storage and Fabrication Sheds: Provide sheds sized, furnished, and equipped to accommodate materials and equipment for construction operations.

1. Store combustible materials apart from building.

2.3 EQUIPMENT

A. Fire Extinguishers: Portable, UL rated; with class and extinguishing agent as required by locations and classes of fire exposures.

B. HVAC Equipment: Unless Owner authorizes use of permanent HVAC system, provide vented, self-contained, liquid-propane-gas or fuel-oil heaters with individual space thermostatic control.

1. Use of gasoline-burning space heaters, open-flame heaters, or salamander-type heating units is prohibited.
2. Heating Units: Listed and labeled for type of fuel being consumed, by a qualified testing agency acceptable to authorities having jurisdiction and marked for intended location and application.
3. Permanent HVAC System: If Owner authorizes use of permanent HVAC system for temporary use during construction, provide filter with MERV of 8 at each return-air grille in system and remove at end of construction and clean HVAC system as required in Section 017700 "Closeout Procedures."

C. Air-Filtration Units: Primary and secondary HEPA-filter-equipped portable units with four-stage filtration. Provide single switch for emergency shutoff. Configure to run continuously.

PART 3 - EXECUTION

3.1 TEMPORARY FACILITIES, GENERAL

A. Conservation: Coordinate construction and use of temporary facilities with consideration given to conservation of energy, water, and materials. Coordinate use of temporary utilities to minimize waste.

1. Salvage materials and equipment involved in performance of, but not actually incorporated into, the Work. See other Sections for disposition of salvaged materials that are designated as Owner's property.

3.2 INSTALLATION, GENERAL

A. Locate facilities where they will serve Project adequately and result in minimum interference with performance of the Work. Relocate and modify facilities as required by progress of the Work.

1. Locate facilities to limit site disturbance as specified in Section 011000 "Summary."

B. Provide each facility ready for use when needed to avoid delay. Do not remove until facilities are no longer needed or are replaced by authorized use of completed permanent facilities.

3.3 TEMPORARY UTILITY INSTALLATION

A. General: Install temporary service or connect to existing service.

1. Arrange with utility company, Owner, and existing users for time when service can be interrupted, if necessary, to make connections for temporary services.

B. Sewers and Drainage: Provide temporary utilities to remove effluent lawfully.

1. Connect temporary sewers to municipal system as directed by authorities having jurisdiction.

C. Water Service: Install water service and distribution piping in sizes and pressures adequate for construction.

D. Water Service: Connect to Owner's existing water service facilities. Clean and maintain water service facilities in a condition acceptable to Owner. At Substantial Completion, restore these facilities to condition existing before initial use.

E. Sanitary Facilities: Provide temporary toilets, wash facilities, and drinking water for use of construction personnel. Comply with requirements of authorities having jurisdiction for type, number, location, operation, and maintenance of fixtures and facilities.

1. Toilets: Use of Owner's existing toilet facilities will not be permitted.

F. Temporary Heating and Cooling: Provide temporary heating and cooling required by construction activities for curing or drying of completed installations or for protecting installed construction from adverse effects of low temperatures or high humidity. Select equipment that will not have a harmful effect on completed installations or elements being installed.

1. Provide temporary dehumidification systems when required to reduce ambient and substrate moisture levels to level required to allow installation or application of finishes and their proper curing or drying.

G. Isolation of Work Areas in Occupied Facilities: Prevent dust, fumes, and odors from entering occupied areas.

1. Prior to commencing work, isolate the HVAC system in area where work is to be performed.

    a. Disconnect supply and return ductwork in work area from HVAC systems servicing occupied areas.
    b. Maintain negative air pressure within work area using HEPA-equipped air-filtration units, starting with commencement of temporary partition construction, and continuing until removal of temporary partitions is complete.

2. Maintain dust partitions during the Work. Use vacuum collection attachments on dust-producing equipment. Isolate limited work within occupied areas using portable dust-containment devices.
3. Perform daily construction cleanup and final cleanup using approved, HEPA-filter-equipped vacuum equipment.

H. Electric Power Service: Connect to Owner's existing electric power service. Maintain equipment in a condition acceptable to Owner.

I. Lighting: Provide temporary lighting with local switching that provides adequate illumination for construction operations, observations, inspections, and traffic conditions.

1. Install and operate temporary lighting that fulfills security and protection requirements without operating entire system.

J. Telephone Service: Provide temporary cell telephone service in common-use facilities for use by all construction personnel.

1. Provide additional telephone lines for the following:
2. At each office desk, post a list of important telephone numbers.

    a. Police and fire departments.
    b. Ambulance service.
    c. Contractor's home office.
    d. Contractor's emergency after-hours telephone number.
    e. Architect's office.
    f. Engineers' offices.
    g. Owner's office.
    h. Principal subcontractors' field and home offices.

3.4 SUPPORT FACILITIES INSTALLATION

A. General: Comply with the following:

1. Provide construction for temporary offices, shops, and sheds located within construction area or within 30 feet (9 m) of building lines that is noncombustible according to ASTM E 136. Comply with NFPA 241.

2. Maintain support facilities until Architect schedules Substantial Completion inspection. Remove before Substantial Completion. Personnel remaining after Substantial Completion will be permitted to use permanent facilities, under conditions acceptable to Owner.

B. Temporary Roads and Paved Areas: Construct and maintain temporary roads and paved areas adequate for construction operations. Locate temporary roads and paved areas as indicated within construction limits indicated on Drawings.

1. Provide dust-control treatment that is nonpolluting and nontracking. Reapply treatment as required to minimize dust.

C. Temporary Use of Planned Permanent Roads and Paved Areas: Locate temporary roads and paved areas in same location as permanent roads and paved areas. Construct and maintain temporary roads and paved areas adequate for construction operations. Extend temporary roads and paved areas, within construction limits indicated, as necessary for construction operations.

1. Coordinate elevations of temporary roads and paved areas with permanent roads and paved areas.
2. Prepare subgrade and install subbase and base for temporary roads and paved areas according to Section 312000 "Earth Moving."
3. Recondition base after temporary use, including removing contaminated material, regrading, proofrolling, compacting, and testing.
4. Delay installation of final course of permanent hot-mix asphalt pavement until immediately before Substantial Completion. Repair hot-mix asphalt base-course pavement before installation of final course according to Section 321216 "Asphalt Paving."

D. Traffic Controls: Comply with requirements of authorities having jurisdiction.

1. Protect existing site improvements to remain including curbs, pavement, and utilities.
2. Maintain access for fire-fighting equipment and access to fire hydrants.

E. Parking: Use designated areas of Owner's existing parking areas for construction personnel.

F. Dewatering Facilities and Drains: Comply with requirements of authorities having jurisdiction. Maintain Project site, excavations, and construction free of water.

1. Dispose of rainwater in a lawful manner that will not result in flooding Project or adjoining properties or endanger permanent Work or temporary facilities.
2. Remove snow and ice as required to minimize accumulations.

G. Project Signs: Provide Project signs as indicated. Unauthorized signs are not permitted.

1. Identification Signs: Provide Project identification signs as indicated on Drawings.
2. Temporary Signs: Provide other signs as indicated and as required to inform public and individuals seeking entrance to Project.

a. Provide temporary, directional signs for construction personnel and visitors.

3. Maintain and touch up signs so they are legible at all times.

H. Waste Disposal Facilities: Provide waste-collection containers in sizes adequate to handle waste from construction operations. Comply with requirements of authorities having jurisdiction.

I. Lifts and Hoists: Provide facilities necessary for hoisting materials and personnel.

1. Truck cranes and similar devices used for hoisting materials are considered "tools and equipment" and not temporary facilities.

J. Temporary Elevator Use: Use of elevators is not permitted.

K. Temporary Stairs: Until permanent stairs are available, provide temporary stairs where ladders are not adequate.

L. Existing Stair Usage: Use of Owner's existing stairs will be permitted, provided stairs are cleaned and maintained in a condition acceptable to Owner. At Substantial Completion, restore stairs to condition existing before initial use.

1. Provide protective coverings, barriers, devices, signs, or other procedures to protect stairs and to maintain means of egress. If stairs become damaged, restore damaged areas so no evidence remains of correction work.

M. Temporary Use of Permanent Stairs: Use of new stairs for construction traffic will be permitted, provided stairs are protected and finishes restored to new condition at time of Substantial Completion.

3.5 SECURITY AND PROTECTION FACILITIES INSTALLATION

A. Protection of Existing Facilities: Protect existing vegetation, equipment, structures, utilities, and other improvements at Project site and on adjacent properties, except those indicated to be removed or altered. Repair damage to existing facilities.

1. Where access to adjacent properties is required in order to affect protection of existing facilities, obtain written permission from adjacent property owner to access property for that purpose.

B. Environmental Protection: Provide protection, operate temporary facilities, and conduct construction as required to comply with environmental regulations and that minimize possible air, waterway, and subsoil contamination or pollution or other undesirable effects.

1. Comply with work restrictions specified in Section 011000 "Summary."

C. Temporary Erosion and Sedimentation Control: Comply with requirements of EPA Construction General Permit or Soil Conservation District authorities having jurisdiction,

whichever is more stringent and requirements specified in Section 311000 "Site Clearing."

D. Temporary Erosion and Sedimentation Control: Provide measures to prevent soil erosion and discharge of soil-bearing water runoff and airborne dust to undisturbed areas and to adjacent properties and walkways, according to erosion- and sedimentation-control Drawings requirements of EPA Construction General Permit or Soil Conservation District authorities having jurisdiction, whichever is more stringent.

1. Verify that flows of water redirected from construction areas or generated by construction activity do not enter or cross tree- or plant-protection zones.
2. Inspect, repair, and maintain erosion- and sedimentation-control measures during construction until permanent vegetation has been established.
3. Clean, repair, and restore adjoining properties and roads affected by erosion and sedimentation from Project site during the course of Project.
4. Remove erosion and sedimentation controls and restore and stabilize areas disturbed during removal.

E. Stormwater Control: Comply with requirements of authorities having jurisdiction. Provide barriers in and around excavations and subgrade construction to prevent flooding by runoff of stormwater from heavy rains.

F. Security Enclosure and Lockup: Install temporary enclosure around partially completed areas of construction. Provide lockable entrances to prevent unauthorized entrance, vandalism, theft, and similar violations of security. Lock entrances at end of each workday.

G. Barricades, Warning Signs, and Lights: Comply with requirements of authorities having jurisdiction for erecting structurally adequate barricades, including warning signs and lighting.

H. Temporary Egress: Maintain temporary egress from existing occupied facilities as indicated and as required by authorities having jurisdiction.

I. Covered Walkway: Erect protective, covered walkway for passage of individuals through or adjacent to Project site. Coordinate with entrance gates, other facilities, and obstructions. Comply with regulations of authorities having jurisdiction.

1. Provide overhead decking, protective enclosure walls, handrails, barricades, warning signs, exit signs, lights, safe and well-drained walkways, and similar provisions for protection and safe passage.
2. Paint and maintain appearance of walkway for duration of the Work.

J. Temporary Enclosures: Provide temporary enclosures for protection of construction, in progress and completed, from exposure, foul weather, other construction operations, and similar activities. Provide temporary weathertight enclosure for building exterior.

1. Where heating or cooling is needed and permanent enclosure is incomplete, insulate temporary enclosures.

K. Temporary Partitions: Provide floor-to-ceiling dustproof partitions to limit dust and dirt migration and to separate areas occupied by Owner and tenants from fumes and noise.

1. Construct dustproof partitions with gypsum wallboard with joints taped on occupied side, and fire-retardant-treated plywood on construction operations side.
2. Construct dustproof partitions with two layers of 6-mil (0.14-mm) polyethylene sheet on each side. Cover floor with two layers of 6-mil (0.14-mm) polyethylene sheet, extending sheets 18 inches (460 mm) up the sidewalls. Overlap and tape full length of joints. Cover floor with fire-retardant-treated plywood.

    a. Construct vestibule and airlock at each entrance through temporary partition with not less than 48 inches (1219 mm) between doors. Maintain water-dampened foot mats in vestibule.

3. Where fire-resistance-rated temporary partitions are indicated or are required by authorities having jurisdiction, construct partitions according to the rated assemblies.
4. Insulate partitions to control noise transmission to occupied areas.
5. Seal joints and perimeter. Equip partitions with gasketed dustproof doors and security locks where openings are required.
6. Protect air-handling equipment.
7. Provide walk-off mats at each entrance through temporary partition.

L. Temporary Fire Protection: Install and maintain temporary fire-protection facilities of types needed to protect against reasonably predictable and controllable fire losses. Comply with NFPA 241; manage fire-prevention program.

1. Prohibit smoking in construction areas. Comply with additional limits on smoking specified in other Sections.
2. Supervise welding operations, combustion-type temporary heating units, and similar sources of fire ignition according to requirements of authorities having jurisdiction.
3. Develop and supervise an overall fire-prevention and -protection program for personnel at Project site. Review needs with local fire department and establish procedures to be followed. Instruct personnel in methods and procedures. Post warnings and information.
4. Provide temporary standpipes and hoses for fire protection. Hang hoses with a warning sign stating that hoses are for fire-protection purposes only and are not to be removed. Match hose size with outlet size and equip with suitable nozzles.

3.6 MOISTURE AND MOLD CONTROL

A. Contractor's Moisture-Protection Plan: Describe delivery, handling, storage, installation, and protection provisions for materials subject to water absorption or water damage.

1. Indicate procedures for discarding water-damaged materials, protocols for mitigating water intrusion into completed Work, and replacing water-damaged Work.
2. Indicate sequencing of work that requires water, such as sprayed fire-resistive materials, plastering, and terrazzo grinding, and describe plans for dealing with

water from these operations. Show procedures for verifying that wet construction has dried sufficiently to permit installation of finish materials.

3. Indicate methods to be used to avoid trapping water in finished work.

B. Exposed Construction Period: Before installation of weather barriers, when materials are subject to wetting and exposure and to airborne mold spores, protect as follows:

1. Protect porous materials from water damage.
2. Protect stored and installed material from flowing or standing water.
3. Keep porous and organic materials from coming into prolonged contact with concrete.
4. Remove standing water from decks.
5. Keep deck openings covered or dammed.

C. Partially Enclosed Construction Period: After installation of weather barriers but before full enclosure and conditioning of building, when installed materials are still subject to infiltration of moisture and ambient mold spores, protect as follows:

1. Do not load or install drywall or other porous materials or components, or items with high organic content, into partially enclosed building.
2. Keep interior spaces reasonably clean and protected from water damage.
3. Periodically collect and remove waste containing cellulose or other organic matter.
4. Discard or replace water-damaged material.
5. Do not install material that is wet.
6. Discard and replace stored or installed material that begins to grow mold.
7. Perform work in a sequence that allows wet materials adequate time to dry before enclosing the material in gypsum board or other interior finishes.

D. Controlled Construction Period: After completing and sealing of the building enclosure but prior to the full operation of permanent HVAC systems, maintain as follows:

1. Control moisture and humidity inside building by maintaining effective dry-in conditions.
2. Use temporary or permanent HVAC system to control humidity within ranges specified for installed and stored materials.
3. Comply with manufacturer's written instructions for temperature, relative humidity, and exposure to water limits.

    a. Measure moisture content of materials that have been exposed to moisture during construction operations or after installation. Record readings beginning at time of exposure and continuing daily for 48 hours. Identify materials containing moisture levels higher than allowed. Report findings in writing to Architect.
    b. Remove and replace materials that cannot be completely restored to their manufactured moisture level within 48 hours.

3.7 OPERATION, TERMINATION, AND REMOVAL

A. Supervision: Enforce strict discipline in use of temporary facilities. To minimize waste and abuse, limit availability of temporary facilities to essential and intended uses.

B. Maintenance: Maintain facilities in good operating condition until removal.

1. Maintain operation of temporary enclosures, heating, cooling, humidity control, ventilation, and similar facilities on a 24-hour basis where required to achieve indicated results and to avoid possibility of damage.

C. Temporary Facility Changeover: Do not change over from using temporary security and protection facilities to permanent facilities until Substantial Completion.

D. Termination and Removal: Remove each temporary facility when need for its service has ended, when it has been replaced by authorized use of a permanent facility, or no later than Substantial Completion. Complete or, if necessary, restore permanent construction that may have been delayed because of interference with temporary facility. Repair damaged Work, clean exposed surfaces, and replace construction that cannot be satisfactorily repaired.

1. Materials and facilities that constitute temporary facilities are property of Contractor. Owner reserves right to take possession of Project identification signs.
2. Remove temporary roads and paved areas not intended for or acceptable for integration into permanent construction. Where area is intended for landscape development, remove soil and aggregate fill that do not comply with requirements for fill or subsoil. Remove materials contaminated with road oil, asphalt and other petrochemical compounds, and other substances that might impair growth of plant materials or lawns. Repair or replace street paving, curbs, and sidewalks at temporary entrances, as required by authorities having jurisdiction.
3. At Substantial Completion, repair, renovate, and clean permanent facilities used during construction period. Comply with final cleaning requirements specified in Section 017700 "Closeout Procedures."

END OF SECTION 015000

This page intentionally left blank.

SECTION 017700 - CLOSEOUT PROCEDURES

PART 1 - GENERAL

1.1 RELATED DOCUMENTS

A. Drawings and general provisions of the Contract, including General and Supplementary Conditions and other Division 01 Specification Sections, apply to this Section.

1.2 SUMMARY

A. Section includes administrative and procedural requirements for contract closeout, including, but not limited to, the following:

1. Substantial Completion procedures.
2. Final completion procedures.
3. Warranties.
4. Final cleaning.
5. Repair of the Work.

1.3 ACTION SUBMITTALS

A. Product Data: For each type of cleaning agent.

B. Contractor's List of Incomplete Items: Initial submittal at Substantial Completion.

C. Certified List of Incomplete Items: Final submittal at final completion.

1.4 CLOSEOUT SUBMITTALS

A. Certificates of Release: From authorities having jurisdiction.

B. Certificate of Insurance: For continuing coverage.

1.5 MAINTENANCE MATERIAL SUBMITTALS

A. Schedule of Maintenance Material Items: For maintenance material submittal items specified in other Sections.

1.6 SUBSTANTIAL COMPLETION PROCEDURES

A. Contractor's List of Incomplete Items: Prepare and submit a list of items to be completed and corrected (Contractor's punch list), indicating the value of each item on the list and reasons why the Work is incomplete.

B. Submittals Prior to Substantial Completion: Complete the following a minimum of 10 days prior to requesting inspection for determining date of Substantial Completion. List items below that are incomplete at time of request.

1. Certificates of Release: Obtain and submit releases from authorities having jurisdiction permitting Owner unrestricted use of the Work and access to services

and utilities. Include occupancy permits, operating certificates, and similar releases.

2. Submit closeout submittals specified in other Division 01 Sections, including project record documents, operation and maintenance manuals, damage or settlement surveys, property surveys, and similar final record information.
3. Submit closeout submittals specified in individual Sections, including specific warranties, workmanship bonds, maintenance service agreements, final certifications, and similar documents.
4. Submit maintenance material submittals specified in individual Sections, including tools, spare parts, extra materials, and similar items, and deliver to location designated by the Engineer. Label with manufacturer's name and model number.

    a. Schedule of Maintenance Material Items: Prepare and submit schedule of maintenance material submittal items, including name and quantity of each item and name and number of related Specification Section. Obtain Engineer’s and Owner's signature for receipt of submittals.

5. Submit testing, adjusting, and balancing records.
6. Submit sustainable design submittals not previously submitted.
7. Submit changeover information related to Owner's occupancy, use, operation, and maintenance.

C. Procedures Prior to Substantial Completion: Complete the following a minimum of 10 days prior to requesting inspection for determining date of Substantial Completion. List items below that are incomplete at time of request.

1. Advise Owner of pending insurance changeover requirements.
2. Make final changeover of permanent locks and deliver keys to Owner. Advise Owner's personnel of changeover in security provisions.
3. Complete startup and testing of systems and equipment.
4. Perform preventive maintenance on equipment used prior to Substantial Completion.
5. Instruct Owner's personnel in operation, adjustment, and maintenance of products, equipment, and systems. Submit demonstration and training video recordings specified in Section 017900 "Demonstration and Training."
6. Advise Owner of changeover in utility services.
7. Participate with Owner in conducting inspection and walkthrough with local emergency responders.
8. Terminate and remove temporary facilities from Project site, along with mockups, construction tools, and similar elements.
9. Complete final cleaning requirements.
10. Touch up paint and otherwise repair and restore marred exposed finishes to eliminate visual defects.

D. Inspection: Submit a written request for inspection to determine Substantial Completion a minimum of 10 days prior to date the Work will be completed and ready for final inspection and tests. On receipt of request, Architect and Engineer will either proceed with inspection or notify Contractor of unfulfilled requirements. Architect will prepare the Certificate of Substantial Completion after inspection or will notify Contractor of items,

either on Contractor's list or additional items identified by Architect, that must be completed or corrected before certificate will be issued.

1. Request reinspection when the Work identified in previous inspections as incomplete is completed or corrected.
2. Results of completed inspection will form the basis of requirements for final completion.

1.7 FINAL COMPLETION PROCEDURES

A. Submittals Prior to Final Completion: Before requesting final inspection for determining final completion, complete the following:

1. Submit a final Application for Payment according to Section 012900 "Payment Procedures."
2. Certified List of Incomplete Items: Submit certified copy of Architect's Substantial Completion inspection list of items to be completed or corrected (punch list), endorsed and dated by Architect. Certified copy of the list shall state that each item has been completed or otherwise resolved for acceptance.
3. Certificate of Insurance: Submit evidence of final, continuing insurance coverage complying with insurance requirements.
4. Submit pest-control final inspection report.
5. Submit final completion photographic documentation.

B. Inspection: Submit a written request for final inspection to determine acceptance a minimum of 10 days prior to date the work will be completed and ready for final inspection and tests. On receipt of request, Architect and Engineer will either proceed with inspection or notify Contractor of unfulfilled requirements. Architect will prepare a final Certificate for Payment after inspection or will notify Contractor of construction that must be completed or corrected before certificate will be issued.

1. Request reinspection when the Work identified in previous inspections as incomplete is completed or corrected.

1.8 LIST OF INCOMPLETE ITEMS (PUNCH LIST)

A. Organization of List: Include name and identification of each space and area affected by construction operations for incomplete items and items needing correction including, if necessary, areas disturbed by Contractor that are outside the limits of construction.

1. Organize list of spaces in sequential order, starting with exterior areas first and proceeding from lowest floor to highest floor.
2. Organize items applying to each space by major element, including categories for ceiling, individual walls, floors, equipment, and building systems.
3. Include the following information at the top of each page:

    a. Project name.
    b. Date.
    c. Name of Architect and Engineer.
    d. Name of Contractor.
    e. Page number.

4. Submit list of incomplete items in the following format:

    a. MS Excel electronic file. Architect, through the Engineer, will return annotated file.
    b. PDF electronic file. Architect, through the Engineer, will return annotated file.

1.9 SUBMITTAL OF PROJECT WARRANTIES

A. Time of Submittal: Submit written warranties on request of Architect for designated portions of the Work where warranties are indicated to commence on dates other than date of Substantial Completion, or when delay in submittal of warranties might limit Owner's rights under warranty.

B. Partial Occupancy: Submit properly executed warranties within 15 days of completion of designated portions of the Work that are completed and occupied or used by Owner during construction period by separate agreement with Contractor.

C. Organize warranty documents into an orderly sequence based on the table of contents of Project Manual.

D. Warranty Electronic File: Provide warranties and bonds in PDF format. Assemble complete warranty and bond submittal package into a single electronic PDF file with bookmarks enabling navigation to each item. Provide bookmarked table of contents at beginning of document.

1. Submit PDF files by email to Architect and Engineer.

E. Warranties in Paper Form:

1. Bind warranties and bonds in heavy-duty, three-ring, vinyl-covered, loose-leaf binders, thickness as necessary to accommodate contents, and sized to receive 8-1/2-by-11-inch (215-by-280-mm) paper.
2. Provide heavy paper dividers with plastic-covered tabs for each separate warranty. Mark tab to identify the product or installation. Provide a typed description of the product or installation, including the name of the product and the name, address, and telephone number of Installer.
3. Identify each binder on the front and spine with the typed or printed title "WARRANTIES," Project name, and name of Contractor.

F. Provide additional copies of each warranty to include in operation and maintenance manuals.

PART 2 - PRODUCTS

2.1 MATERIALS

A. Cleaning Agents: Use cleaning materials and agents recommended by manufacturer or fabricator of the surface to be cleaned. Do not use cleaning agents that are potentially hazardous to health or property or that might damage finished surfaces.

1. Use cleaning products that comply with Green Seal's GS-37, or if GS-37 is not applicable, use products that comply with the California Code of Regulations maximum allowable VOC levels.

PART 3 - EXECUTION

3.1 FINAL CLEANING

A. General: Perform final cleaning. Conduct cleaning and waste-removal operations to comply with local laws and ordinances and Federal and local environmental and antipollution regulations.

B. Cleaning: Employ experienced workers or professional cleaners for final cleaning. Clean each surface or unit to condition expected in an average commercial building cleaning and maintenance program. Comply with manufacturer's written instructions.

1. Complete the following cleaning operations before requesting inspection for certification of Substantial Completion for entire Project or for a designated portion of Project:

a. Clean Project site, yard, and grounds, in areas disturbed by construction activities, including landscape development areas, of rubbish, waste material, litter, and other foreign substances.
b. Sweep paved areas broom clean. Remove petrochemical spills, stains, and other foreign deposits.
c. Rake grounds that are not planted, mulched, or paved to a smooth, even-textured surface.
d. Remove tools, construction equipment, machinery, and surplus material from Project site.
e. Remove snow and ice to provide safe access to building.
f. Clean exposed exterior and interior hard-surfaced finishes to a dirt-free condition, free of stains, films, and similar foreign substances. Avoid disturbing natural weathering of exterior surfaces. Restore reflective surfaces to their original condition.
g. Remove debris and surface dust from limited access spaces, including roofs, plenums, shafts, trenches, equipment vaults, manholes, attics, and similar spaces.
h. Sweep concrete floors broom clean in unoccupied spaces.
i. Vacuum carpet and similar soft surfaces, removing debris and excess nap; clean according to manufacturer's recommendations if visible soil or stains remain.
j. Clean transparent materials, including mirrors and glass in doors and windows. Remove glazing compounds and other noticeable, vision-obscuring materials. Polish mirrors and glass, taking care not to scratch surfaces.
k. Remove labels that are not permanent.
l. Wipe surfaces of mechanical and electrical equipment, elevator equipment, and similar equipment. Remove excess lubrication, paint and mortar droppings, and other foreign substances.

m. Clean plumbing fixtures to a sanitary condition, free of stains, including stains resulting from water exposure.
n. Replace disposable air filters and clean permanent air filters. Clean exposed surfaces of diffusers, registers, and grills.
o. Clean ducts, blowers, and coils if units were operated without filters during construction or that display contamination with particulate matter on inspection.

1) Clean HVAC system in compliance with NADCA ACR. Provide written report on completion of cleaning.

p. Clean light fixtures, lamps, globes, and reflectors to function with full efficiency.
q. Leave Project clean and ready for occupancy.

3.2 REPAIR OF THE WORK

A. Complete repair and restoration operations before requesting inspection for determination of Substantial Completion.

B. Repair, or remove and replace, defective construction. Repairing includes replacing defective parts, refinishing damaged surfaces, touching up with matching materials, and properly adjusting operating equipment. Where damaged or worn items cannot be repaired or restored, provide replacements. Remove and replace operating components that cannot be repaired. Restore damaged construction and permanent facilities used during construction to specified condition.

1. Remove and replace chipped, scratched, and broken glass, reflective surfaces, and other damaged transparent materials.
2. Touch up and otherwise repair and restore marred or exposed finishes and surfaces. Replace finishes and surfaces that that already show evidence of repair or restoration.

a. Do not paint over "UL" and other required labels and identification, including mechanical and electrical nameplates. Remove paint applied to required labels and identification.

3. Replace parts subject to operating conditions during construction that may impede operation or reduce longevity.
4. Replace burned-out bulbs, bulbs noticeably dimmed by hours of use, and defective and noisy starters in fluorescent and mercury vapor fixtures to comply with requirements for new fixtures.

END OF SECTION 017700

SECTION 017839 - PROJECT RECORD DOCUMENTS

PART 1 - GENERAL

1.1 RELATED DOCUMENTS

A. Drawings and general provisions of the Contract, including General and Supplementary Conditions and other Division 01 Specification Sections, apply to this Section.

1.2 SUMMARY

A. Section includes administrative and procedural requirements for project record documents, including the following:

1. Record Drawings.
2. Record Specifications.
3. Record Product Data.
4. Miscellaneous record submittals.

B. Related Requirements:

1. Section 011200 "Multiple Contract Summary" for coordinating project record documents covering the Work of multiple contracts.
2. Section 017700 "Closeout Procedures" for general closeout procedures.

1.3 CLOSEOUT SUBMITTALS

A. Record Drawings: Comply with the following:

1. Number of Copies: Submit one set(s) of marked-up record prints.
2. Number of Copies: Submit copies of record Drawings as follows:

    a. Record Submittal:

        1) Submit one paper-copy set(s) of marked-up record prints.
        2) Submit PDF electronic files of scanned record prints and one of file prints.
        3) Submit record digital data files and one set(s) of plots.
        4) Architect will indicate whether general scope of changes, additional information recorded, and quality of drafting are acceptable.

B. Record Specifications: Submit one paper copy and annotated PDF electronic files of Project's Specifications, including addenda and contract modifications.

C. Record Product Data: Submit one paper copy annotated PDF electronic files and directories of each submittal.

1. Where record Product Data are required as part of operation and maintenance manuals, submit duplicate marked-up Product Data as a component of manual.

D. Miscellaneous Record Submittals: See other Specification Sections for miscellaneous record-keeping requirements and submittals in connection with various construction activities. Submit one paper copy annotated PDF electronic files and directories] of each submittal.

1.4 RECORD DRAWINGS

A. Record Prints: Maintain one set of marked-up paper copies of the Contract Drawings and Shop Drawings, incorporating new and revised drawings as modifications are issued.

1. Preparation: Mark record prints to show the actual installation where installation varies from that shown originally. Require individual or entity who obtained record data, whether individual or entity is Installer, subcontractor, or similar entity, to provide information for preparation of corresponding marked-up record prints.

    a. Give particular attention to information on concealed elements that would be difficult to identify or measure and record later.
    b. Accurately record information in an acceptable drawing technique.
    c. Record data as soon as possible after obtaining it.
    d. Record and check the markup before enclosing concealed installations.
    e. Cross-reference record prints to corresponding photographic documentation.

2. Content: Types of items requiring marking include, but are not limited to, the following:

    a. Dimensional changes to Drawings.
    b. Revisions to details shown on Drawings.
    c. Depths of foundations.
    d. Locations and depths of underground utilities.
    e. Revisions to routing of piping and conduits.
    f. Revisions to electrical circuitry.
    g. Actual equipment locations.
    h. Duct size and routing.
    i. Locations of concealed internal utilities.
    j. Changes made by Change Order, Field Work Directive, or Change Directive.
    k. Changes made following Architect's written orders.
    l. Details not on the original Contract Drawings.
    m. Field records for variable and concealed conditions.
    n. Record information on the Work that is shown only schematically.

3. Mark the Contract Drawings and Shop Drawings completely and accurately. Use personnel proficient at recording graphic information in production of marked-up record prints.
4. Mark record sets with erasable, red-colored pencil. Use other colors to distinguish between changes for different categories of the Work at same location.
5. Mark important additional information that was either shown schematically or omitted from original Drawings.

6. Note Construction Change Directive numbers, alternate numbers, Change Order numbers, and similar identification, where applicable.

B. Record Digital Data Files: Immediately before inspection for Certificate of Substantial Completion, review marked-up record prints with Architect and Engineer. When authorized, prepare a full set of corrected digital data files of the Contract Drawings, as follows:

1. Format: Same digital data software program, version, and operating system as the original Contract Drawings.
2. Format: Annotated PDF electronic file with comment function enabled.
3. Incorporate changes and additional information previously marked on record prints. Delete, redraw, and add details and notations where applicable.
4. Refer instances of uncertainty to Architect through the Engineer for resolution.
5. Architect will furnish Contractor with one set of digital data files of the Contract Drawings for use in recording information.

C. Format: Identify and date each record Drawing; include the designation "PROJECT RECORD DRAWING" in a prominent location.

1. Record Prints: Organize record prints into manageable sets. Bind each set with durable paper cover sheets. Include identification on cover sheets.
2. Format: Annotated PDF electronic file with comment function enabled.
3. Record Digital Data Files: Organize digital data information into separate electronic files that correspond to each sheet of the Contract Drawings. Name each file with the sheet identification. Include identification in each digital data file.
4. Identification: As follows:

    a. Project name.
    b. Date.
    c. Designation "PROJECT RECORD DRAWINGS."
    d. Name of Architect and Engineer.
    e. Name of Contractor.

1.5 RECORD SPECIFICATIONS

A. Preparation: Mark Specifications to indicate the actual product installation where installation varies from that indicated in Specifications, addenda, and contract modifications.

1. Give particular attention to information on concealed products and installations that cannot be readily identified and recorded later.
2. Mark copy with the proprietary name and model number of products, materials, and equipment furnished, including substitutions and product options selected.
3. Record the name of manufacturer, supplier, Installer, and other information necessary to provide a record of selections made.
4. For each principal product, indicate whether record Product Data has been submitted in operation and maintenance manuals instead of submitted as record Product Data.

5. Note related Change Orders, record Product Data, and record Drawings where applicable.

B. Format: Submit record Specifications as annotated PDF electronic file.

1.6 RECORD PRODUCT DATA

A. Recording: Maintain one copy of each submittal during the construction period for project record document purposes. Post changes and revisions to project record documents as they occur; do not wait until end of Project.

B. Preparation: Mark Product Data to indicate the actual product installation where installation varies substantially from that indicated in Product Data submittal.

1. Give particular attention to information on concealed products and installations that cannot be readily identified and recorded later.
2. Include significant changes in the product delivered to Project site and changes in manufacturer's written instructions for installation.
3. Note related Change Orders, record Specifications, and record Drawings where applicable.

C. Format: Submit record Product Data as annotated PDF electronic file or scanned PDF electronic file(s) of marked-up paper copy of Product Data.

1. Include record Product Data directory organized by Specification Section number and title, electronically linked to each item of record Product Data.

1.7 MISCELLANEOUS RECORD SUBMITTALS

A. Assemble miscellaneous records required by other Specification Sections for miscellaneous record keeping and submittal in connection with actual performance of the Work. Bind or file miscellaneous records and identify each, ready for continued use and reference.

B. Format: Submit miscellaneous record submittals as scanned PDF electronic file(s) of marked-up miscellaneous record submittals.

1. Include miscellaneous record submittals directory organized by Specification Section number and title, electronically linked to each item of miscellaneous record submittals.

1.8 MAINTENANCE OF RECORD DOCUMENTS

A. Maintenance of Record Documents: Store record documents in the field office apart from the Contract Documents used for construction. Do not use project record documents for construction purposes. Maintain record documents in good order and in a clean, dry, legible condition, protected from deterioration and loss. Provide access to project record documents for Architect's and Engineer’s reference during normal working hours.

PART 2 - PRODUCTS (Not Used)

PART 3 - EXECUTION (Not Used)

END OF SECTION 017839

This page intentionally left blank.

SECTION 024119 - SELECTIVE DEMOLITION

PART 1 - GENERAL

1.1 RELATED DOCUMENTS

A. Drawings and general provisions of the Contract, including General and Supplementary Conditions and Division 01 Specification Sections, apply to this Section.

1.2 SUMMARY

A. Section Includes:

1. Demolition and removal of selected portions of building or structure.
2. Demolition and removal of selected site elements.
3. Salvage of existing items to be reused or recycled.

B. Related Requirements:

1. Section 011000 "Summary" for restrictions on use of the premises, Owner-occupancy requirements, and phasing requirements.
2. Section 311000 "Site Clearing" for site clearing and removal of above- and below-grade improvements not part of selective demolition.

1.3 DEFINITIONS

A. Remove: Detach items from existing construction and dispose of them off-site unless indicated to be salvaged or reinstalled.

B. Remove and Salvage: Detach items from existing construction, in a manner to prevent damage, and deliver to Owner ready for reuse store.

C. Remove and Reinstall: Detach items from existing construction, in a manner to prevent damage, prepare for reuse, and reinstall where indicated.

D. Existing to Remain: Leave existing items that are not to be removed and that are not otherwise indicated to be salvaged or reinstalled.

E. Dismantle: To remove by disassembling or detaching an item from a surface, using gentle methods and equipment to prevent damage to the item and surfaces; disposing of items unless indicated to be salvaged or reinstalled.

1.4 MATERIALS OWNERSHIP

A. Unless otherwise indicated, demolition waste becomes property of Contractor.

1.5 PRE-DEMOLITION MEETINGS

A. Pre-demolition Conference: Conduct conference at Project site.

1. Inspect and discuss condition of construction to be selectively demolished.

2. Review structural load limitations of existing structure.
3. Review and finalize selective demolition schedule and verify availability of materials, demolition personnel, equipment, and facilities needed to make progress and avoid delays.
4. Review requirements of work performed by other trades that rely on substrates exposed by selective demolition operations.
5. Review areas where existing construction is to remain and requires protection.

1.6 INFORMATIONAL SUBMITTALS

A. Qualification Data: For refrigerant recovery technician.

B. Engineering Survey: Submit engineering survey of condition of building.

C. Proposed Protection Measures: Submit report, including Drawings, that indicates the measures proposed for protecting individuals and property, for environmental protection, for dust control and for noise control. Indicate proposed locations and construction of barriers.

D. Schedule of Selective Demolition Activities: Indicate the following:

1. Detailed sequence of selective demolition and removal work, with starting and ending dates for each activity. Ensure Owner's building manager's and other tenants' on-site operations are uninterrupted.
2. Interruption of utility services. Indicate how long utility services will be interrupted.
3. Coordination for shutoff, capping, and continuation of utility services.
4. Use of elevator and stairs.
5. Coordination of Owner's continuing occupancy of portions of existing building and of Owner's partial occupancy of completed Work.

E. Pre-demolition Photographs or Video: Show existing conditions of adjoining construction, including finish surfaces, that might be misconstrued as damage caused by demolition operations. Comply with Section 013233 "Photographic Documentation." Submit before Work begins.

F. Statement of Refrigerant Recovery: Signed by refrigerant recovery technician responsible for recovering refrigerant, stating that all refrigerant that was present was recovered and that recovery was performed according to EPA regulations. Include name and address of technician and date refrigerant was recovered.

G. Warranties: Documentation indicating that existing warranties are still in effect after completion of selective demolition.

1.7 CLOSEOUT SUBMITTALS

A. Inventory: Submit a list of items that have been removed and salvaged.

1.8 QUALITY ASSURANCE

A. Refrigerant Recovery Technician Qualifications: Certified by an EPA-approved certification program.

1.9 FIELD CONDITIONS

A. Owner will occupy portions of building immediately adjacent to selective demolition area. Conduct selective demolition so Owner's operations will not be disrupted.

B. Conditions existing at time of inspection for bidding purpose will be maintained by Owner as far as practical.

1. Before selective demolition, Owner will remove the following items:

    a. Furniture and fixtures adjacent to the work areas.
    b. Vehicles and ground equipment.

C. Notify Architect of discrepancies between existing conditions and Drawings before proceeding with selective demolition.

D. Hazardous Materials: It is not expected that hazardous materials will be encountered in the Work.

1. Hazardous materials will be removed by Owner before start of the Work.
2. If suspected hazardous materials are encountered, do not disturb; immediately notify Architect and Owner. Hazardous materials will be removed by Owner under a separate contract.

E. Hazardous Materials: Present in buildings and structures to be selectively demolished. A report on the presence of hazardous materials is on file for review and use. Examine report to become aware of locations where hazardous materials are present.

1. Hazardous material remediation is specified elsewhere in the Contract Documents.
2. Do not disturb hazardous materials or items suspected of containing hazardous materials except under procedures specified elsewhere in the Contract Documents.
3. Owner will provide material safety data sheets for suspected hazardous materials that are known to be present in buildings and structures to be selectively demolished because of building operations or processes performed there.

F. Storage or sale of removed items or materials on-site is not permitted.

G. Utility Service: Maintain existing utilities indicated to remain in service and protect them against damage during selective demolition operations.

1. Maintain fire-protection facilities in service during selective demolition operations.

1.10 WARRANTY

A. Existing Warranties: Remove, replace, patch, and repair materials and surfaces cut or damaged during selective demolition, by methods and with materials and using approved contractors so as not to void existing warranties. Notify warrantor before proceeding. Existing warranties include the following:

1. Roofing

B. Notify warrantor on completion of selective demolition, and obtain documentation verifying that existing system has been inspected and warranty remains in effect. Submit documentation at Project closeout.

1.11 COORDINATION

A. Arrange selective demolition schedule so as not to interfere with Owner's operations.

PART 2 - PRODUCTS

2.1 PERFORMANCE REQUIREMENTS

A. Regulatory Requirements: Comply with governing EPA and DEP notification regulations before beginning selective demolition. Comply with hauling and disposal regulations of authorities having jurisdiction.

B. Standards: Comply with ASSE A10.6 and NFPA 241.

PART 3 - EXECUTION

3.1 EXAMINATION

A. Verify that utilities have been disconnected and capped before starting selective demolition operations.

B. Review Project Record Documents of existing construction or other existing condition and hazardous material information provided by Owner. Owner does not guarantee that existing conditions are same as those indicated in Project Record Documents.

C. Perform an engineering survey of condition of building to determine whether removing any element might result in structural deficiency or unplanned collapse of any portion of structure or adjacent structures during selective building demolition operations.

1. Perform surveys as the Work progresses to detect hazards resulting from selective demolition activities.

D. Steel Tendons: Locate tensioned steel tendons and include recommendations for de-tensioning.

E. Verify that hazardous materials have been remediated before proceeding with building demolition operations.

F. Survey of Existing Conditions: Record existing conditions by use of measured drawings and preconstruction photographs or video.

1. Inventory and record the condition of items to be removed and salvaged. Provide photographs or video of conditions that might be misconstrued as damage caused by salvage operations.
2. Before selective demolition or removal of existing building elements that will be reproduced or duplicated in final Work, make permanent record of measurements, materials, and construction details required to make exact reproduction.

3.2 PREPARATION

A. Refrigerant: Before starting demolition, remove refrigerant from mechanical equipment according to 40 CFR 82 and regulations of authorities having jurisdiction.

3.3 UTILITY SERVICES AND MECHANICAL/ELECTRICAL SYSTEMS

A. Existing Services/Systems to Remain: Maintain services/systems indicated to remain and protect them against damage.

B. Existing Services/Systems to Be Removed, Relocated, or Abandoned: Locate, identify, disconnect, and seal or cap off utility services and mechanical/electrical systems serving areas to be selectively demolished.

1. Owner will arrange to shut off indicated services/systems when requested by Contractor.
2. Arrange to shut off utilities with utility companies.
3. If services/systems are required to be removed, relocated, or abandoned, provide temporary services/systems that bypass area of selective demolition and that maintain continuity of services/systems to other parts of building.
4. Disconnect, demolish, and remove fire-suppression systems, plumbing, and HVAC systems, equipment, and components indicated on Drawings to be removed.

    a. Piping to Be Removed: Remove portion of piping indicated to be removed and cap or plug remaining piping with same or compatible piping material.
    b. Piping to Be Abandoned in Place: Drain piping and cap or plug piping with same or compatible piping material and leave in place.
    c. Equipment to Be Removed: Disconnect and cap services and remove equipment.
    d. Equipment to Be Removed and Reinstalled: Disconnect and cap services and remove, clean, and store equipment; when appropriate, reinstall, reconnect, and make equipment operational.
    e. Equipment to Be Removed and Salvaged: Disconnect and cap services and remove equipment and deliver to Owner.
    f. Ducts to Be Removed: Remove portion of ducts indicated to be removed and plug remaining ducts with same or compatible ductwork material.
    g. Ducts to Be Abandoned in Place: Cap or plug ducts with same or compatible ductwork material and leave in place.

3.4 PROTECTION

A. Temporary Protection: Provide temporary barricades and other protection required to prevent injury to people and damage to adjacent buildings and facilities to remain.

1. Provide protection to ensure safe passage of people around selective demolition area and to and from occupied portions of building.
2. Provide temporary weather protection, during interval between selective demolition of existing construction on exterior surfaces and new construction, to prevent water leakage and damage to structure and interior areas.
3. Protect walls, ceilings, floors, and other existing finish work that are to remain or that are exposed during selective demolition operations.
4. Cover and protect furniture, furnishings, and equipment that have not been removed.
5. Comply with requirements for temporary enclosures, dust control, heating, and cooling specified in Section 015000 "Temporary Facilities and Controls."

B. Temporary Shoring: Design, provide, and maintain shoring, bracing, and structural supports as required to preserve stability and prevent movement, settlement, or collapse of construction and finishes to remain, and to prevent unexpected or uncontrolled movement or collapse of construction being demolished.

1. Strengthen or add new supports when required during progress of selective demolition.

C. Remove temporary barricades and protections where hazards no longer exist.

3.5 SELECTIVE DEMOLITION, GENERAL

A. General: Demolish and remove existing construction only to the extent required by new construction and as indicated. Use methods required to complete the Work within limitations of governing regulations and as follows:

1. Proceed with selective demolition systematically, from higher to lower level. Complete selective demolition operations above each floor or tier before disturbing supporting members on the next lower level.
2. Neatly cut openings and holes plumb, square, and true to dimensions required. Use cutting methods least likely to damage construction to remain or adjoining construction. Use hand tools or small power tools designed for sawing or grinding, not hammering and chopping. Temporarily cover openings to remain.
3. Cut or drill from the exposed or finished side into concealed surfaces to avoid marring existing finished surfaces.
4. Do not use cutting torches until work area is cleared of flammable materials. At concealed spaces, such as duct and pipe interiors, verify condition and contents of hidden space before starting flame-cutting operations. Maintain portable fire-suppression devices during flame-cutting operations.
5. Maintain fire watch during and for at least 3 hours after flame-cutting operations.
6. Maintain adequate ventilation when using cutting torches.
7. Remove decayed, vermin-infested, or otherwise dangerous or unsuitable materials and promptly dispose of off-site.

8. Remove structural framing members and lower to ground by method suitable to avoid free fall and to prevent ground impact or dust generation.
9. Locate selective demolition equipment and remove debris and materials so as not to impose excessive loads on supporting walls, floors, or framing.
10. Dispose of demolished items and materials promptly.

B. Site Access and Temporary Controls: Conduct selective demolition and debris-removal operations to ensure minimum interference with roads, streets, walks, walkways, and other adjacent occupied and used facilities.

C. Removed and Salvaged Items:

1. Clean salvaged items.
2. Pack or crate items after cleaning. Identify contents of containers.
3. Store items in a secure area until delivery to Owner.
4. Transport items to Owner's storage area designated by Owner.
5. Protect items from damage during transport and storage.

D. Removed and Reinstalled Items:

1. Clean and repair items to functional condition adequate for intended reuse.
2. Pack or crate items after cleaning and repairing. Identify contents of containers.
3. Protect items from damage during transport and storage.
4. Reinstall items in locations indicated. Comply with installation requirements for new materials and equipment. Provide connections, supports, and miscellaneous materials necessary to make item functional for use indicated.

E. Existing Items to Remain: Protect construction indicated to remain against damage and soiling during selective demolition. When permitted by Architect, items may be removed to a suitable, protected storage location during selective demolition, cleaned and reinstalled in their original locations after selective demolition operations are complete.

3.6 SELECTIVE DEMOLITION PROCEDURES FOR SPECIFIC MATERIALS

A. Concrete: Demolish in small sections. Using power-driven saw, cut concrete to a depth of at least 3/4 inch (19 mm) at junctures with construction to remain. Dislodge concrete from reinforcement at perimeter of areas being demolished, cut reinforcement, and then remove remainder of concrete. Neatly trim openings to dimensions indicated.

B. Concrete: Demolish in sections. Cut concrete full depth at junctures with construction to remain and at regular intervals using power-driven saw, and then remove concrete between saw cuts.

C. Masonry: Demolish in small sections. Cut masonry at junctures with construction to remain, using power-driven saw, and then remove masonry between saw cuts.

D. Concrete Slabs-on-Grade: Saw-cut perimeter of area to be demolished, and then break up and remove.

E. Resilient Floor Coverings: Remove floor coverings and adhesive according to recommendations in RFCI's "Recommended Work Practices for the Removal of

Resilient Floor Coverings." Do not use methods requiring solvent-based adhesive strippers.

F. Roofing: Remove no more existing roofing than what can be covered in one day by new roofing and so that building interior remains watertight and weathertight. See Section 076100 for new roofing requirements.

1. Remove existing roof membrane, flashings, copings, and roof accessories.
2. Remove existing roofing system down to insulation substrate.

3.7 DISPOSAL OF DEMOLISHED MATERIALS

A. Remove demolition waste materials from Project site and dispose of them in an EPA or DEP-approved construction and demolition waste landfill acceptable to authorities having jurisdiction.

1. Do not allow demolished materials to accumulate on-site.
2. Remove and transport debris in a manner that will prevent spillage on adjacent surfaces and areas.
3. Remove debris from elevated portions of building by chute, hoist, or other device that will convey debris to grade level in a controlled descent.

B. Burning: Do not burn demolished materials.

3.8 CLEANING

A. Clean adjacent structures and improvements of dust, dirt, and debris caused by selective demolition operations. Return adjacent areas to condition existing before selective demolition operations began.

3.9 SELECTIVE DEMOLITION SCHEDULE

A. Remove: Items indicated on the demolition plans and elevations.

B. Remove: Items indicated on the demolition plans and elevations.

C. Remove and Reinstall: Items indicated on the demolition plans and elevations.

D. Existing to Remain: All items and areas indicated on the demolition plans and elevations.

E. Dismantle: Selected roof, walls, doors, and windows indicated on the demolition plans and elevations.

END OF SECTION 024119

SECTION 032000 - CONCRETE REINFORCING

PART 1 - GENERAL

1.1 SUMMARY

A. Section Includes:

1. Steel reinforcement bars.
2. Welded-wire reinforcement.

1.2 ACTION SUBMITTALS

A. Product Data: For the following:

1. Each type of steel reinforcement.
2. Bar supports.
3. Mechanical splice couplers.

B. Shop Drawings: Comply with ACI SP-066:

1. Include placing drawings that detail fabrication, bending, and placement.
2. Include bar sizes, lengths, materials, grades, bar schedules, stirrup spacing, bent bar diagrams, bar arrangement, location of splices, lengths of lap splices, details of mechanical splice couplers, details of welding splices, tie spacing, hoop spacing, and supports for concrete reinforcement.

C. Construction Joint Layout: Indicate proposed construction joints required to build the structure.

1. Location of construction joints is subject to approval of the Architect.

1.3 INFORMATIONAL SUBMITTALS

A. Welding certificates.

1. Reinforcement to Be Welded: Welding procedure specification in accordance with AWS D1.4/D1.4M

B. Material Certificates: For each of the following, signed by manufacturers:

1. Epoxy-Coated Reinforcement: CRSI's "Epoxy Coating Plant Certification."

C. Material Test Reports: For the following, from a qualified testing agency:

1. Steel Reinforcement:

a. For reinforcement to be welded, mill test analysis for chemical composition and carbon equivalent of the steel in accordance with ASTM A706/A706M.

2. Mechanical splice couplers.

D. Field quality-control reports.

E. Minutes of preinstallation conference.

1.4 QUALITY ASSURANCE

A. Welding Qualifications: Qualify procedures and personnel in accordance with AWS D1.4/D 1.4M.

PART 2 - PRODUCTS

2.1 STEEL REINFORCEMENT

A. Reinforcing Bars: ASTM A615/A615M, Grade 60 Grade 420.

B. Low-Alloy Steel Reinforcing Bars: ASTM A706/A706M, deformed.

C. Headed-Steel Reinforcing Bars: ASTM A970/A970M.

D. Plain-Steel Welded-Wire Reinforcement: ASTM A1064/A1064M, plain, fabricated from as-drawn steel wire into flat sheets.

2.2 REINFORCEMENT ACCESSORIES

A. Bar Supports: Bolsters, chairs, spacers, and other devices for spacing, supporting, and fastening reinforcing bars and welded-wire reinforcement in place.

1. Manufacture bar supports from steel wire, plastic, or precast concrete in accordance with CRSI's "Manual of Standard Practice," of greater compressive strength than concrete and as follows:

a. For concrete surfaces exposed to view, where legs of wire bar supports contact forms, use CRSI Class 1 plastic-protected steel wire, all-plastic bar supports, or CRSI Class 2 stainless steel bar supports.
b. For epoxy-coated reinforcement, use CRSI Class 1A epoxy-coated or other dielectric-polymer-coated wire bar supports.
c. For dual-coated reinforcement, use CRSI Class 1A epoxy-coated or other dielectric-polymer-coated wire bar supports.
d. For zinc-coated reinforcement, use galvanized wire or dielectric-polymer-coated wire bar supports.
e. For stainless steel reinforcement, use CRSI Class 1 plastic-protected steel wire, all-plastic bar supports, or CRSI Class 2 stainless steel bar supports.

B. Mechanical Splice Couplers: ACI 318 (ACI 318M) Type 2, same material of reinforcing bar being spliced; mechanical-lap type.

C. Tie Wire: ASTM A1064/A1064M, annealed steel, not less than 0.0508 inch (1.2908 mm) in diameter.

1. Finish: Plain.

2.3 FABRICATING REINFORCEMENT

A. Fabricate steel reinforcement according to CRSI's "Manual of Standard Practice."

PART 3 - EXECUTION

3.1 PREPARATION

A. Protection of In-Place Conditions:

1. Do not cut or puncture vapor retarder.
2. Repair damage and reseal vapor retarder before placing concrete.

B. Clean reinforcement of loose rust and mill scale, earth, ice, and other foreign materials that reduce bond to concrete.

3.2 INSTALLATION OF STEEL REINFORCEMENT

A. Comply with CRSI's "Manual of Standard Practice" for placing and supporting reinforcement.

B. Accurately position, support, and secure reinforcement against displacement.

1. Locate and support reinforcement with bar supports to maintain minimum concrete cover.
2. Do not tack weld crossing reinforcing bars.

C. Preserve clearance between bars of not less than 1 inch (25 mm), not less than one bar diameter, or not less than 1-1/3 times size of large aggregate, whichever is greater.

D. Provide concrete coverage in accordance with ACI 318 (ACI 318M).

E. Set wire ties with ends directed into concrete, not toward exposed concrete surfaces.

F. Splices: Lap splices as indicated on Drawings.

1. Bars indicated to be continuous, and all vertical bars shall be lapped not less than 36 bar diameters at splices, or 24 inches (610 mm), whichever is greater.
2. Stagger splices in accordance with ACI 318 (ACI 318M).
3. Mechanical Splice Couplers: Install in accordance with manufacturer's instructions.
4. Weld reinforcing bars in accordance with AWS D1.4/D 1.4M, where indicated on Drawings.

G. Install welded-wire reinforcement in longest practicable lengths.

1. Support welded-wire reinforcement in accordance with CRSI "Manual of Standard Practice."

a. For reinforcement less than W4.0 or D4.0, continuous support spacing shall not exceed 12 inches (305 mm).

2. Lap edges and ends of adjoining sheets at least one mesh spacing plus 2 inches (50 mm) for plain wire and 8 inches (200 mm) for deformed wire.
3. Offset laps of adjoining sheet widths to prevent continuous laps in either direction.
4. Lace overlaps with wire.

3.3 JOINTS

A. Construction Joints: Install so strength and appearance of concrete are not impaired, at locations indicated or as approved by Architect.

1. Place joints perpendicular to main reinforcement.
2. Continue reinforcement across construction joints unless otherwise indicated.
3. Do not continue reinforcement through sides of strip placements of floors and slabs.

3.4 INSTALLATION TOLERANCES

A. Comply with ACI 117 (ACI 117M).

3.5 FIELD QUALITY CONTROL

A. Special Inspections: Owner will engage an engineer to perform field tests and inspections and prepare test reports.

B. Inspections:

1. Steel-reinforcement placement.
2. Steel-reinforcement mechanical splice couplers.
3. Steel-reinforcement welding.

END OF SECTION 032000

SECTION 033000 - CAST-IN-PLACE CONCRETE

PART 1 - GENERAL

1.1 SUMMARY

A. Section Includes:

1. Cast-in-place concrete, including concrete materials, mixture design, placement procedures, and finishes.

B. Related Requirements:

1. Section 032000 "Concrete Reinforcing" for steel reinforcing bars and welded-wire reinforcement.
2. Section 312000 "Earth Moving" for drainage fill under slabs-on-ground.

1.2 DEFINITIONS

A. Cementitious Materials: Portland cement alone or in combination with one or more of the following: blended hydraulic cement, fly ash, slag cement, and other pozzolans materials subject to compliance with requirements.

B. Water/Cement Ratio (w/cm): The ratio by weight of water to cementitious materials.

1.3 PREINSTALLATION MEETINGS

A. Preinstallation Conference: Conduct conference at Project site.

1.4 ACTION SUBMITTALS

A. Product Data: For each of the following.

1. Portland cement.
2. Fly ash.
3. Slag cement.
4. Blended hydraulic cement.
5. Aggregates.
6. Admixtures:

    a. Include limitations of use, including restrictions on cementitious materials, supplementary cementitious materials, air entrainment, aggregates, temperature at time of concrete placement, relative humidity at time of concrete placement, curing conditions, and use of other admixtures.

7. Vapor retarders.
8. Liquid floor treatments.
9. Curing materials.
10. Joint fillers.

B. Design Mixtures: For each concrete mixture, include the following:

1. Mixture identification.
2. Minimum 28-day compressive strength.
3. Durability exposure class.
4. Maximum w/cm.
5. Calculated equilibrium unit weight, for lightweight concrete.
6. Slump limit.
7. Air content.
8. Nominal maximum aggregate size.
9. Indicate amounts of mixing water to be withheld for later addition at Project site if permitted.
10. Intended placement method.
11. Submit alternate design mixtures when characteristics of materials, Project conditions, weather, test results, or other circumstances warrant adjustments.

C. Shop Drawings:

1. Construction Joint Layout: Indicate proposed construction joints required to construct the structure.

    a. Location of construction joints is subject to approval of the Architect.

D. Concrete Schedule: For each location of each Class of concrete indicated in "Concrete Mixtures" Article, including the following:

1. Concrete Class designation.
2. Location within Project.
3. Exposure Class designation.
4. Formed Surface Finish designation and final finish.
5. Final finish for floors.
6. Curing process.
7. Floor treatment if any.

1.5 INFORMATIONAL SUBMITTALS

A. Material Certificates: For each of the following, signed by manufacturers:

1. Cementitious materials.
2. Admixtures.
3. Curing compounds.
4. Vapor retarders.
5. Joint-filler strips.

B. Material Test Reports: For the following, from a qualified testing agency:

1. Portland cement.
2. Fly ash.
3. Slag cement.
4. Blended hydraulic cement.
5. Aggregates.
6. Admixtures:

C. Research Reports: For concrete admixtures in accordance with ICC's Acceptance Criteria AC198.

D. Preconstruction Test Reports: For each mix design.

E. Field quality-control reports.

F. Minutes of preinstallation conference.

1.6 QUALITY ASSURANCE

A. Ready-Mixed Concrete Manufacturer Qualifications: A firm experienced in manufacturing ready-mixed concrete products and that complies with ASTM C94/C94M requirements for production facilities and equipment.

1. Manufacturer certified in accordance with NRMCA's "Certification of Ready Mixed Concrete Production Facilities."

1.7 PRECONSTRUCTION TESTING

A. Preconstruction Testing Service: Engage a qualified testing agency to perform preconstruction testing on each concrete mixture.

1. Include the following information in each test report:

a. Admixture dosage rates.
b. Slump.
c. Air content.
d. Seven-day compressive strength.
e. 28-day compressive strength.

1.8 DELIVERY, STORAGE, AND HANDLING

A. Comply with ASTM C94/C94M and ACI 301 (ACI 301M).

1.9 FIELD CONDITIONS

A. Cold-Weather Placement: Comply with ACI 301 (ACI 301M) and ACI 306.1.

B. Hot-Weather Placement: Comply with ACI 301 (ACI 301M) and ACI 305.1 (ACI 305.1M).

PART 2 - PRODUCTS

2.1 CONCRETE, GENERAL

A. ACI Publications: Comply with the following unless modified by requirements in the Contract Documents:

1. ACI 301 (ACI 301M).

2.2 CONCRETE MATERIALS

A. Cementitious Materials:

1. Portland Cement: ASTM C150/C150M, Type I, white.
2. Fly Ash: ASTM C618, Class C or F.
3. Slag Cement: ASTM C989/C989M, Grade 100 or 120.

B. Normal-Weight Aggregates: ASTM C33/C33M, coarse aggregate or better, graded. Provide aggregates from a single source.

C. Air-Entraining Admixture: ASTM C260/C260M.

D. Chemical Admixtures: Certified by manufacturer to be compatible with other admixtures that do not contribute water-soluble chloride ions exceeding those permitted in hardened concrete. Do not use calcium chloride or admixtures containing calcium chloride in steel-reinforced concrete.

1. Water-Reducing Admixture: ASTM C494/C494M, Type A.
2. Retarding Admixture: ASTM C494/C494M, Type B.
3. Water-Reducing and -Retarding Admixture: ASTM C494/C494M, Type D.
4. High-Range, Water-Reducing Admixture: ASTM C494/C494M, Type F.
5. High-Range, Water-Reducing and -Retarding Admixture: ASTM C494/C494M, Type G.
6. Plasticizing and Retarding Admixture: ASTM C1017/C1017M, Type II.

E. Water and Water Used to Make Ice: ASTM C94/C94M, potable.

2.3 VAPOR RETARDERS

A. Sheet Vapor Retarder, Class A: ASTM E1745, Class A, except with maximum water-vapor permeance of <Insert rating>]; not less than 10 mils (0.25 mm) thick. Include manufacturer's recommended adhesive or pressure-sensitive tape.

1. Poly America, LP
2. Stego Industries, LLC
3. W.R. Meadows Inc.

2.4 LIQUID FLOOR TREATMENTS

A. Penetrating Liquid Floor Treatment: Clear, chemically reactive, waterborne solution of inorganic silicate or siliconate materials and proprietary components; odorless; that penetrates, hardens, and densifies concrete surfaces.

1. BASF Corp.
2. Euclid Chemical Co.
3. Laticrete International

2.5 CURING MATERIALS

A. Absorptive Cover: AASHTO M 182, Class 2, burlap cloth made from jute or kenaf, weighing approximately 9 oz./sq. yd. (305 g/sq. m) when dry.

B. Moisture-Retaining Cover: ASTM C171, polyethylene film burlap-polyethylene sheet.

1. Subject to compliance with requirements, provide products for one of the following:

    a. Ambient Temperature Below 50 deg F (10 deg C): Black.
    b. Ambient Temperature between 50 deg F (10 deg C) and 85 deg F (29 deg C): Any color.
    c. Ambient Temperature Above 85 deg F (29 deg C): White.

C. Water: Potable or complying with ASTM C1602/C1602M.

D. Clear, Waterborne, Membrane-Forming, Curing and Sealing Compound: ASTM C1315, Type 1, Class A.

1. Euclid Chemical Co.
2. Laticrete International
3. W.R. Meadows Inc.

2.6 RELATED MATERIALS

A. Expansion- and Isolation-Joint-Filler Strips: ASTM D1751, asphalt-saturated cellulosic fiber or ASTM D1752, cork or self-expanding cork.

2.7 CONCRETE MIXTURES, GENERAL

A. Prepare design mixtures for each type and strength of concrete, proportioned on the basis of laboratory trial mixture or field test data, or both, in accordance with ACI 301 (ACI 301M).

1. Use a qualified testing agency for preparing and reporting proposed mixture designs, based on laboratory trial mixtures.

B. Cementitious Materials: Limit percentage, by weight, of cementitious materials other than portland cement in concrete as follows:

1. Fly Ash or Other Pozzolans: 25 percent by mass.
2. Slag Cement: 50 percent by mass.
3. Total of Fly Ash or Other Pozzolans, Slag Cement: 50 percent by mass, with fly ash or pozzolans not exceeding 25 percent by mass.
4. Total of Fly Ash or Other Pozzolans: 35 percent by mass with fly ash or pozzolans not exceeding 25 percent by mass.

C. Admixtures: Use admixtures in accordance with manufacturer's written instructions.

1. Use water-reducing, high-range water-reducing or plasticizing admixture in concrete, as required, for placement and workability.

2. Use water-reducing and -retarding admixture when required by high temperatures, low humidity, or other adverse placement conditions.
3. Use water-reducing admixture in pumped concrete, concrete for heavy-use industrial slabs and parking structure slabs, and concrete with a w/cm below 0.50.

2.8 CONCRETE MIXTURES

A. Class A: Normal-weight concrete used for footings, grade beams, and tie beams.

1. Minimum Compressive Strength: 4000 psi (27.6 MPa) at 28 days.
2. Maximum w/cm: 0.45.
3. Slump Limit: 5 inches (125 mm), plus or minus 1 inch (25 mm) for concrete with verified slump of 2 to 4 inches (50 to 100 mm) before adding high-range water-reducing admixture or plasticizing admixture.
4. Limit water-soluble, chloride-ion content in hardened concrete to 0.30 percent by weight of cement.

B. Class C: Normal-weight concrete used for interior slabs-on-ground.

1. Minimum Compressive Strength: 4500 psi (31 MPa) at 28 days.
2. Maximum w/cm: 0.45.
3. Slump Limit: 5 inches (125 mm), plus or minus 1 inch (25 mm) for concrete with verified slump of 2 to 4 inches (50 to 100 mm) before adding high-range water-reducing admixture or plasticizing admixture.
4. Air Content:

    a. Do not use an air-entraining admixture or allow total air content to exceed 3 percent for concrete used in trowel-finished floors.

5. Limit water-soluble, chloride-ion content in hardened concrete to 0.30 percent by weight of cement.

2.9 CONCRETE MIXING

A. Ready-Mixed Concrete: Measure, batch, mix, and deliver concrete in accordance with ASTM C94/C94M and ASTM C1116/C1116M and furnish batch ticket information.

B. Project-Site Mixing: Measure, batch, and mix concrete materials and concrete in accordance with ASTM C94/C94M. Mix concrete materials in appropriate drum-type batch machine mixer.

1. For mixer capacity of 1 cu. yd. (0.76 cu. m) or smaller, continue mixing at least 1-1/2 minutes, but not more than five minutes after ingredients are in mixer, before any part of batch is released.
2. For mixer capacity larger than 1 cu. yd. (0.76 cu. m), increase mixing time by 15 seconds for each additional 1 cu. yd. (0.76 cu. m).
3. Provide batch ticket for each batch discharged and used in the Work, indicating Project identification name and number, date, mixture type, mixture time, quantity, and amount of water added. Record approximate location of final deposit in structure.

PART 3 - EXECUTION

3.1 INSTALLATION OF EMBEDDED ITEMS

A. Place and secure anchorage devices and other embedded items required for adjoining Work that is attached to or supported by cast-in-place concrete.

1. Use setting drawings, templates, diagrams, instructions, and directions furnished with items to be embedded.
2. Install anchor rods, accurately located, to elevations required and complying with tolerances in Section 7.5 of ANSI/AISC 303.
3. Install reglets to receive waterproofing and to receive through-wall flashings in outer face of concrete frame at exterior walls, where flashing is shown at lintels, shelf angles, and other conditions.

3.2 INSTALLATION OF VAPOR RETARDER

A. Sheet Vapor Retarders: Place, protect, and repair sheet vapor retarder in accordance with ASTM E1643 and manufacturer's written instructions.

1. Install vapor retarder with longest dimension parallel with direction of concrete pour.
2. Face laps away from exposed direction of concrete pour.
3. Lap vapor retarder over footings and grade beams not less than 6 inches (150 mm), sealing vapor retarder to concrete.
4. Lap joints 6 inches (150 mm) and seal with manufacturer's recommended tape.
5. Terminate vapor retarder at the top of floor slabs, grade beams, and pile caps, sealing entire perimeter to floor slabs, grade beams, foundation walls, or pile caps.
6. Seal penetrations in accordance with vapor retarder manufacturer's instructions.
7. Protect vapor retarder during placement of reinforcement and concrete.

    a. Repair damaged areas by patching with vapor retarder material, overlapping damages area by 6 inches (150 mm) on all sides, and sealing to vapor retarder.

3.3 JOINTS

A. Construct joints true to line, with faces perpendicular to surface plane of concrete.

B. Construction Joints: Coordinate with floor slab pattern and concrete placement sequence.

1. Install so strength and appearance of concrete are not impaired, at locations indicated on Drawings or as approved by Architect.
2. Place joints perpendicular to main reinforcement.

    a. Continue reinforcement across construction joints unless otherwise indicated.
    b. Do not continue reinforcement through sides of strip placements of floors and slabs.

3. Form keyed joints as indicated. Embed keys at least 1-1/2 inches (38 mm) into concrete.
4. Locate joints for beams, slabs, joists, and girders at third points of spans. Offset joints in girders a minimum distance of twice the beam width from a beam-girder intersection.
5. Locate horizontal joints in walls and columns at underside of floors, slabs, beams, and girders and at the top of footings or floor slabs.

C. Control Joints in Slabs-on-Ground: Form weakened-plane control joints, sectioning concrete into areas as indicated. Construct control joints for a depth equal to at least one-fourth of concrete thickness as follows:

1. Grooved Joints: Form control joints after initial floating by grooving and finishing each edge of joint to a radius of 1/8 inch (3.2 mm). Repeat grooving of control joints after applying surface finishes. Eliminate groover tool marks on concrete surfaces.
2. Sawed Joints: Form control joints with power saws equipped with shatterproof abrasive or diamond-rimmed blades. Cut 1/8-inch- (3.2-mm-) wide joints into concrete when cutting action does not tear, abrade, or otherwise damage surface and before concrete develops random cracks.

D. Isolation Joints in Slabs-on-Ground: After removing formwork, install joint-filler strips at slab junctions with vertical surfaces, such as column pedestals, foundation walls, grade beams, and other locations, as indicated.

1. Extend joint-filler strips full width and depth of joint, terminating flush with finished concrete surface unless otherwise indicated on Drawings.
2. Terminate full-width joint-filler strips not less than 1/2 inch (13 mm) or more than 1 inch (25 mm) below finished concrete surface, where joint sealants, specified in Section 079200 "Joint Sealants," are indicated.
3. Install joint-filler strips in lengths as long as practicable. Where more than one length is required, lace or clip sections together.

E. Doweled Joints:

1. Install dowel bars and support assemblies at joints where indicated on Drawings.
2. Lubricate or asphalt coat one-half of dowel bar length to prevent concrete bonding to one side of joint.

F. Dowel Plates: Install dowel plates at joints where indicated on Drawings.

3.4 CONCRETE PLACEMENT

A. Before placing concrete, verify that installation of formwork, reinforcement, embedded items, and vapor retarder is complete and that required inspections are completed.

1. Immediately prior to concrete placement, inspect vapor retarder for damage and deficient installation, and repair defective areas.
2. Provide continuous inspection of vapor retarder during concrete placement and make necessary repairs to damaged areas as Work progresses.

B. Notify Architect and testing and inspection agencies 24 hours prior to commencement of concrete placement.

C. Do not add water to concrete during delivery, at Project site, or during placement unless approved by Architect in writing, but not to exceed the amount indicated on the concrete delivery ticket.

1. Do not add water to concrete after adding high-range water-reducing admixtures to mixture.

D. Before test sampling and placing concrete, water may be added at Project site, subject to limitations of ACI 301 (ACI 301M), but not to exceed the amount indicated on the concrete delivery ticket.

1. Do not add water to concrete after adding high-range water-reducing admixtures to mixture.

E. Deposit concrete continuously in one layer or in horizontal layers of such thickness that no new concrete is placed on concrete that has hardened enough to cause seams or planes of weakness.

1. If a section cannot be placed continuously, provide construction joints as indicated.
2. Deposit concrete to avoid segregation.
3. Deposit concrete in horizontal layers of depth not to exceed formwork design pressures and in a manner to avoid inclined construction joints.
4. Consolidate placed concrete with mechanical vibrating equipment in accordance with ACI 301 (ACI 301M).

    a. Do not use vibrators to transport concrete inside forms.
    b. Insert and withdraw vibrators vertically at uniformly spaced locations to rapidly penetrate placed layer and at least 6 inches (150 mm) into preceding layer.
    c. Do not insert vibrators into lower layers of concrete that have begun to lose plasticity.
    d. At each insertion, limit duration of vibration to time necessary to consolidate concrete, and complete embedment of reinforcement and other embedded items without causing mixture constituents to segregate.

F. Deposit and consolidate concrete for slabs in a continuous operation, within limits of construction joints, until placement of a panel or section is complete.

1. Do not place concrete floors and slabs in a checkerboard sequence.
2. Consolidate concrete during placement operations, so concrete is thoroughly worked around reinforcement and other embedded items and into corners.
3. Maintain reinforcement in position on chairs during concrete placement.
4. Screed slab surfaces with a straightedge and strike off to correct elevations.
5. Level concrete, cut high areas, and fill low areas.
6. Slope surfaces uniformly to drains where required.
7. Begin initial floating using bull floats or darbies to form a uniform and open-textured surface plane, before excess bleedwater appears on the surface.

8. Do not further disturb slab surfaces before starting finishing operations.

3.5 FINISHING FORMED SURFACES

A. As-Cast Surface Finishes:

1. ACI 301 (ACI 301M) Surface Finish SF-1.0: As-cast concrete texture imparted by form-facing material.

    a. Patch voids larger than 1-1/2 inches (38 mm) wide or 1/2 inch (13 mm) deep.
    b. Remove projections larger than 1 inch (25 mm).
    c. Tie holes do not require patching.
    d. Surface Tolerance: ACI 117 (ACI 117M) Class D.
    e. Apply to concrete surfaces at foundations not exposed to public view.

3.6 FINISHING SLABS

A. Comply with ACI 302.1R recommendations for screeding, restraightening, and finishing operations for concrete surfaces. Do not wet concrete surfaces.

1. When bleedwater sheen has disappeared and concrete surface has stiffened sufficiently to permit operation of specific float apparatus, consolidate concrete surface with power-driven floats or by hand floating if area is small or inaccessible to power-driven floats.
2. Repeat float passes and restraightening until surface is left with a uniform, smooth, granular texture and complies with ACI 117 (ACI A117M) tolerances for conventional concrete.

B. Broom Finish: Apply a broom finish to exterior concrete aprons, platforms, steps, ramps, and locations indicated on Drawings.

1. Immediately after float finishing, slightly roughen trafficked surface by brooming with fiber-bristle broom perpendicular to main traffic route.
2. Coordinate required final finish with Architect before application.

3.7 INSTALLATION OF MISCELLANEOUS CONCRETE ITEMS

A. Filling In:

1. Fill in holes and openings left in concrete structures after Work of other trades is in place unless otherwise indicated.
2. Mix, place, and cure concrete, as specified, to blend with in-place construction.
3. Provide other miscellaneous concrete filling indicated or required to complete the Work.

3.8 CONCRETE CURING

A. Protect freshly placed concrete from premature drying and excessive cold or hot temperatures.

1. Comply with ACI 301 (ACI 301M) and ACI 306.1 for cold weather protection during curing.
2. Comply with ACI 301 (ACI 301M) and ACI 305.1 (ACI 305.1M) for hot-weather protection during curing.

B. Evaporation Retarder: Apply evaporation retarder to unformed concrete surfaces if hot, dry, or windy conditions cause moisture loss approaching 0.2 lb/sq. ft. x h (1 kg/sq. m x h) before and during finishing operations. Apply in accordance with manufacturer's written instructions after placing, screeding, and bull floating or darbying concrete, but before float finishing.

C. Curing Formed Surfaces: Comply with ACI 308.1 (ACI 308.1M) as follows:

1. Cure formed concrete surfaces, including underside of beams, supported slabs, and other similar surfaces.
2. Cure concrete containing color pigments in accordance with color pigment manufacturer's instructions.
3. If forms remain during curing period, moist cure after loosening forms.
4. If removing forms before end of curing period, continue curing for remainder of curing period, as follows:

    a. Continuous Fogging: Maintain standing water on concrete surface until final setting of concrete.
    b. Continuous Sprinkling: Maintain concrete surface continuously wet.
    c. Absorptive Cover: Pre-dampen absorptive material before application; apply additional water to absorptive material to maintain concrete surface continuously wet.
    d. Water-Retention Sheeting Materials: Cover exposed concrete surfaces with sheeting material, taping, or lapping seams.
    e. Membrane-Forming Curing Compound: Apply uniformly in continuous operation by power spray or roller in accordance with manufacturer's written instructions.

        1) Recoat areas subject to heavy rainfall within three hours after initial application.
        2) Maintain continuity of coating and repair damage during curing period.

D. Curing Unformed Surfaces: Comply with ACI 308.1 (ACI 308.1M) as follows:

1. Begin curing immediately after finishing concrete.
2. Interior Concrete Floors:

    a. Floors to Receive Floor Coverings Specified in Other Sections: Contractor has option of the following:

        1) Absorptive Cover: As soon as concrete has sufficient set to permit application without marring concrete surface, install prewetted absorptive cover over entire area of floor.

a) Lap edges and ends of absorptive cover not less than 12-inches (300-mm).
b) Maintain absorptive cover water saturated, and in place, for duration of curing period, but not less than seven days.

2) Moisture-Retaining-Cover Curing: Cover concrete surfaces with moisture-retaining cover for curing concrete, placed in widest practicable width, with sides and ends lapped at least 12 inches (300 mm), and sealed by waterproof tape or adhesive.

a) Immediately repair any holes or tears during curing period, using cover material and waterproof tape.
b) Cure for not less than seven days.

3) Ponding or Continuous Sprinkling of Water: Maintain concrete surfaces continuously wet for not less than seven days, utilizing one, or a combination of, the following:

a) Water.
b) Continuous water-fog spray.

3.9 TOLERANCES

A. Conform to ACI 117 (ACI 117M).

3.10 APPLICATION OF LIQUID FLOOR TREATMENTS

A. Penetrating Liquid Floor Treatment: Prepare, apply, and finish penetrating liquid floor treatment in accordance with manufacturer's written instructions.

1. Remove curing compounds, sealers, oil, dirt, laitance, and other contaminants and complete surface repairs.
2. Do not apply to concrete that is less than [three] [seven] [14] [28] days' old.
3. Apply liquid until surface is saturated, scrubbing into surface until a gel forms; rewet; and repeat brooming or scrubbing.
4. Rinse with water; remove excess material until surface is dry.
5. Apply a second coat in a similar manner if surface is rough or porous.

B. Sealing Coat: Uniformly apply a continuous sealing coat of curing and sealing compound to hardened concrete by power spray or roller in accordance with manufacturer's written instructions.

3.11 FIELD QUALITY CONTROL

A. Special Inspections: Owner will engage a special inspector to perform field tests and inspections and prepare testing and inspection reports.

B. Testing Agency: Owner will engage a qualified testing and inspecting agency to perform tests and inspections and to submit reports.

1. Testing agency shall immediately report to Architect, Contractor, and concrete manufacturer any failure of Work to comply with Contract Documents.
2. Testing agency shall report results of tests and inspections, in writing, to Owner, Architect, Contractor, and concrete manufacturer within 48 hours of inspections and tests.

    a. Test reports shall include reporting requirements of ASTM C31/C31M and ASTM C39/C39M, including the following as applicable to each test and inspection:

        1) Project name.
        2) Name of testing agency.
        3) Names and certification numbers of field and laboratory technicians performing inspections and testing.
        4) Name of concrete manufacturer.
        5) Date and time of inspection, sampling, and field testing.
        6) Date and time of concrete placement.
        7) Location in Work of concrete represented by samples.
        8) Date and time sample was obtained.
        9) Truck and batch ticket numbers.
        10) Design compressive strength at 28 days.
        11) Concrete mixture designation, proportions, and materials.
        12) Field test results.
        13) Information on storage and curing of samples before testing, including curing method and maximum and minimum temperatures during initial curing period.
        14) Type of fracture and compressive break strengths at seven days and 28 days.

C. Batch Tickets: For each load delivered, submit three copies of batch delivery ticket to testing agency, indicating quantity, mix identification, admixtures, design strength, aggregate size, design air content, design slump at time of batching, and amount of water that can be added at Project site.

D. Inspections:

1. Headed bolts and studs.
2. Verification of use of required design mixture.
3. Concrete placement, including conveying and depositing.
4. Curing procedures and maintenance of curing temperature.
5. Verification of concrete strength before removal of shores and forms from beams and slabs.
6. Batch Plant Inspections: On a random basis, as determined by Architect.

E. Concrete Tests: Testing of composite samples of fresh concrete obtained in accordance with ASTM C 172/C 172M shall be performed in accordance with the following requirements:

1. Testing Frequency: Obtain one composite sample for each day's pour of each concrete mixture exceeding 5 cu. yd. (4 cu. m), but less than 25 cu. yd. (19 cu. m), plus one set for each additional 50 cu. yd. (38 cu. m) or fraction thereof.

a. When frequency of testing provides fewer than five compressive-strength tests for each concrete mixture, testing shall be conducted from at least five randomly selected batches or from each batch if fewer than five are used.

2. Slump: ASTM C143/C143M:

   a. One test at point of placement for each composite sample, but not less than one test for each day's pour of each concrete mixture.
   b. Perform additional tests when concrete consistency appears to change.

3. Air Content: ASTM C231/C231M pressure method, for normal-weight concrete.

   a. One test for each composite sample, but not less than one test for each day's pour of each concrete mixture.

4. Concrete Temperature: ASTM C1064/C1064M:

   a. One test hourly when air temperature is 40 deg F (4.4 deg C) and below or 80 deg F (27 deg C) and above, and one test for each composite sample.

5. Compression Test Specimens: ASTM C31/C31M:

   a. Cast and laboratory cure two sets of 6-inch (150 mm) by 12-inch (300 mm) cylinder specimens for each composite sample.
   b. Cast and field cure two sets of two standard cylinder specimens for each composite sample.

6. Compressive-Strength Tests: ASTM C39/C39M.

   a. Test one set of two laboratory-cured specimens at seven days and one set of two specimens at 28 days.
   b. Test one set of two field-cured specimens at seven days and one set of two specimens at 28 days.
   c. A compressive-strength test shall be the average compressive strength from a set of two specimens obtained from same composite sample and tested at age indicated.

7. When strength of field-cured cylinders is less than 85 percent of companion laboratory-cured cylinders, Contractor shall evaluate operations and provide corrective procedures for protecting and curing in-place concrete.
8. Strength of each concrete mixture will be satisfactory if every average of any three consecutive compressive-strength tests equals or exceeds specified compressive strength, and no compressive-strength test value falls below specified compressive strength by more than 500 psi (3.4 MPa) if specified compressive strength is 5000 psi (34.5 MPa), or no compressive strength test value is less than 1 percent of specified compressive strength if specified compressive strength is greater than 5000 psi (34.5 MPa).

9. Nondestructive Testing: Impact hammer, sonoscope, or other nondestructive device may be permitted by Architect but will not be used as sole basis for approval or rejection of concrete.
10. Additional Tests:

    a. Testing and inspecting agency shall make additional tests of concrete when test results indicate that slump, air entrainment, compressive strengths, or other requirements have not been met, as directed by Architect.
    b. Testing and inspecting agency may conduct tests to determine adequacy of concrete by cored cylinders complying with ASTM C42/C42M or by other methods as directed by Architect.

        1) Acceptance criteria for concrete strength shall be in accordance with ACI 301 (ACI 301M), section 1.6.6.3.

11. Additional testing and inspecting, at Contractor's expense, will be performed to determine compliance of replaced or additional work with specified requirements.
12. Correct deficiencies in the Work that test reports and inspections indicate do not comply with the Contract Documents.

F. Measure floor and slab flatness and levelness in accordance with ASTM E1155 (ASTM E1155M) within 48 hours of completion of floor finishing and promptly report test results to Architect.

3.12 PROTECTION

A. Protect concrete surfaces as follows:

1. Protect from petroleum stains.
2. Diaper hydraulic equipment used over concrete surfaces.
3. Prohibit vehicles from interior concrete slabs.
4. Prohibit use of pipe-cutting machinery over concrete surfaces.
5. Prohibit placement of steel items on concrete surfaces.
6. Prohibit use of acids or acidic detergents over concrete surfaces.
7. Protect liquid floor treatment from damage and wear during the remainder of construction period. Use protective methods and materials, including temporary covering, recommended in writing by liquid floor treatments installer.
8. Protect concrete surfaces scheduled to receive surface hardener or polished concrete finish using Floor Slab Protective Covering.

END OF SECTION 033000

This page intentionally left blank.

SECTION 051200 - STRUCTURAL STEEL FRAMING

PART 1 - GENERAL

1.1 SUMMARY

A. Section Includes:

1. Structural steel.
2. Shear stud connectors.
3. Shrinkage-resistant grout.
4. Concrete filled bollards.

1.2 DEFINITIONS

A. Structural Steel: Elements of the structural frame indicated on Drawings and as described in ANSI/AISC 303.

1.3 PREINSTALLATION MEETINGS

A. Preinstallation Conference: Conduct conference at Project site.

1.4 ACTION SUBMITTALS

A. Product Data:

1. Structural-steel materials.
2. Shear stud connectors.
3. Anchor rods.
4. Threaded rods.
5. Forged-steel hardware.
6. Shop primer.
7. Shrinkage-resistant grout.

B. Shop Drawings: Show fabrication of structural-steel components.

C. Delegated-Design Submittal: For structural-steel connections indicated on Drawings to comply with design loads, include analysis data signed and sealed by the qualified professional engineer responsible for their preparation.

1.5 INFORMATIONAL SUBMITTALS

A. Welding certificates.

B. Mill test reports for structural-steel materials, including chemical and physical properties.

C. Source quality-control reports.

D. Field quality-control reports.

1.6 QUALITY ASSURANCE

A. Fabricator Qualifications: A qualified fabricator that participates in the AISC Quality Certification Program and is designated an AISC-Certified Plant, Category BU or is accredited by the IAS Fabricator Inspection Program for Structural Steel (Acceptance Criteria 172).

B. Installer Qualifications: A qualified Installer who participates in the AISC Quality Certification Program and is designated an AISC-Certified Erector, Category ACSE.

C. Welding Qualifications: Qualify procedures and personnel in accordance with AWS D1.1/D1.1M.

PART 2 - PRODUCTS

2.1 PERFORMANCE REQUIREMENTS

A. Comply with applicable provisions of the following specifications and documents:

1. ANSI/AISC 303.
2. ANSI/AISC 360.
3. RCSC's "Specification for Structural Joints Using High-Strength Bolts."

B. Connection Design Information:

1. Design connections and final configuration of member reinforcement at connections in accordance with ANSI/AISC 303 by fabricator's qualified professional engineer.

    a. Use Load and Resistance Factor Design; data are given at factored-load level. OR Allowable Stress Design; data are given at service-load level.

C. Moment Connections: Type PR, partially restrained.

D. Construction: Combined system of moment frame, braced frame, and shear walls.

2.2 STRUCTURAL-STEEL MATERIALS

A. W-Shapes: ASTM A992/A992M, Grade 50 (Grade 345).

B. Channels, Angles ASTM A36/A36M.

C. Plate and Bar: ASTM A36/A36M.

D. Cold-Formed Hollow Structural Sections: ASTM A500/A500M, Grade B structural tubing.

E. Steel Pipe: ASTM A53/A53M, Type E or Type S, Grade B.

F. Welding Electrodes: Comply with AWS requirements.

2.3 BOLTS AND CONNECTORS

A. High-Strength A325 Bolts, Nuts, and Washers: ASTM F3125/F3125M, Grade A325 (Grade A325M), Type 1, heavy-hex steel structural bolts; ASTM A563, Grade DH (ASTM A563M, Class 10S), heavy-hex carbon-steel nuts; and ASTM F436/F436M, Type 1, hardened carbon-steel washers; all with plain finish.

1. Direct-Tension Indicators: ASTM F959/F959M, Type 325-1 (Type 8.8-1), compressible-washer type with plain finish.

B. Zinc-Coated High-Strength A325 Bolts, Nuts, and Washers: ASTM F3125/F3125M, Grade A325 (Grade A325M), heavy-hex carbon-steel nuts; and ASTM F436/F436M, Type 1, hardened carbon-steel washers.

1. Finish:Hot-dip zinc coating.
2. Direct-Tension Indicators: ASTM F959/F959M, Type 325-1 (Type 8.8-1), compressible-washer type with mechanically deposited zinc coating finish.

C. Tension-Control, High-Strength Bolt-Nut-Washer Assemblies: ASTM F3125/F3125M, Grade F1852, Type 1, heavy-hex or round head assemblies, consisting of steel structural bolts with splined ends; ASTM A563, Grade DH (ASTM A563M, Class 10S), heavy-hex carbon-steel nuts; and ASTM F436/F436M, Type 1, hardened carbon-steel washers.

1. Finish: Plain.

D. Shear Stud Connectors: ASTM A108, AISI C-1015 through C-1020, headed-stud type, cold-finished carbon steel; AWS D1.1/D1.1M, Type B.

2.4 RODS

A. Unheaded Anchor Rods: ASTM F1554, Grade 55, weldable.

1. Configuration: Hooked.
2. Finish: Plain, ASTM A153/A153M, Class C.

B. Headed Anchor Rods: ASTM F1554, Grade 55, weldable, straight.

1. Finish: Plain ASTM A153/A153M, Class C

C. Threaded Rods: ASTM A36/A36M.

1. Finish: Plain ASTM A153/A153M, Class C

2.5 PRIMER

A. Steel Primer:

1. Comply with Section 099113 "Exterior Painting" and Section 099123 "Interior Painting. Primer in first subparagraph below requires SSPC-SP 6 (WAB)/NACE WAB-3 commercial blast-cleaning surface preparation or

better and 24 hours' drying before recoating. SSPC recommends two primer coats before exposing steel to exterior, and one or two topcoats.

2. SSPC-Paint 23, latex primer.
3. Fabricator's standard lead- and chromate-free, nonasphaltic, rust-inhibiting primer complying with MPI#79 and compatible with topcoat.

2.6 SHRINKAGE-RESISTANT GROUT

A. Nonmetallic, Shrinkage-Resistant Grout: ASTM C1107/C1107M, factory-packaged, nonmetallic aggregate grout, noncorrosive and nonstaining, mixed with water to consistency suitable for application and a 30-minute working time.

2.7 CONCRETE FILLED BOLLARDS

A. 6”x ¼” diameter steel pipe bollards, shop primed for field painting traffic yellow.

2.8 FABRICATION

A. Structural Steel: Fabricate and assemble in shop to greatest extent possible. Fabricate in accordance with ANSI/AISC 303 and to ANSI/AISC 360.

B. Shear Stud Connectors: Prepare steel surfaces as recommended by manufacturer of shear connectors. Weld using automatic end welding of headed-stud shear connectors in accordance with AWS D1.1/D1.1M and manufacturer's written instructions.

2.9 SHOP CONNECTIONS

A. High-Strength Bolts: Shop install high-strength bolts in accordance with RCSC's "Specification for Structural Joints Using High-Strength Bolts" for type of bolt and type of joint specified.

1. Joint Type: Snug tightened or Pretensioned.

B. Weld Connections: Comply with AWS D1.1/D1.1M for tolerances, appearances, welding procedure specifications, weld quality, and methods used in correcting welding work.

2.10 SHOP PRIMING

A. Shop prime steel surfaces, except the following:

1. Surfaces embedded in concrete or mortar. Extend priming of partially embedded members to a depth of 2 inches (50 mm).
2. Surfaces to be field welded.
3. Surfaces of high-strength bolted, slip-critical connections.
4. Surfaces to receive sprayed fire-resistive materials (applied fireproofing).
5. Galvanized surfaces [unless indicated to be painted].
6. Surfaces enclosed in interior construction.

B. Surface Preparation of Steel: Clean surfaces to be painted. Remove loose rust and mill scale and spatter, slag, or flux deposits. Prepare surfaces in accordance with the following specifications and standards:

1. SSPC-SP 2.
2. SSPC-SP 3.
3. SSPC-SP 7 (WAB)/NACE WAB-4.
4. SSPC-SP 6 (WAB)/NACE WAB-3.

C. Surface Preparation of Galvanized Steel: Prepare galvanized-steel surfaces for shop priming by thoroughly cleaning steel of grease, dirt, oil, flux, and other foreign matter, and treating with etching cleaner or in accordance with SSPC-SP 16.

D. Priming: Immediately after surface preparation, apply primer in accordance with manufacturer's written instructions and at rate recommended by SSPC to provide a minimum dry film thickness of 1.5 mils (0.038 mm). Use priming methods that result in full coverage of joints, corners, edges, and exposed surfaces.

2.11 SOURCE QUALITY CONTROL

A. Testing Agency: [Owner will engage] [Engage] a qualified testing agency to perform shop tests and inspections.

1. Allow testing agency access to places where structural-steel work is being fabricated or produced to perform tests and inspections.
2. Bolted Connections: Inspect shop-bolted connections in accordance with RCSC's "Specification for Structural Joints Using High-Strength Bolts."
3. Welded Connections: Visually inspect shop-welded connections in accordance with AWS D1.1/D1.1M and the following inspection procedures, at testing agency's option:

    a. Liquid Penetrant Inspection: ASTM E165/E165M.
    b. Magnetic Particle Inspection: ASTM E709; performed on root pass and on finished weld. Cracks or zones of incomplete fusion or penetration are not accepted.
    c. Ultrasonic Inspection: ASTM E164.
    d. Radiographic Inspection: ASTM E94/E94M.

4. In addition to visual inspection, test and inspect shop-welded shear stud connectors in accordance with requirements in AWS D1.1/D1.1M.
5. Prepare test and inspection reports.

PART 3 - EXECUTION

3.1 EXAMINATION

A. Verify, with certified steel erector present, elevations of concrete- and masonry-bearing surfaces and locations of anchor rods, bearing plates, and other embedments for compliance with requirements.

B. Proceed with installation only after unsatisfactory conditions have been corrected.

3.2 ERECTION

A. Set structural steel accurately in locations and to elevations indicated and in accordance with ANSI/AISC 303 and ANSI/AISC 360.

B. Baseplates Bearing Plates and Leveling Plates: Clean concrete- and masonry-bearing surfaces of bond-reducing materials and roughen surfaces prior to setting plates. Clean bottom surface of plates.

1. Set plates for structural members on wedges, shims, or setting nuts as required.
2. Weld plate washers to top of baseplate.
3. Snug-tighten or Pretension anchor rods after supported members have been positioned and plumbed. Do not remove wedges or shims but, if protruding, cut off flush with edge of plate before packing with grout.
4. Promptly pack shrinkage-resistant grout solidly between bearing surfaces and plates, so no voids remain. Neatly finish exposed surfaces; protect grout and allow to cure. Comply with manufacturer's written installation instructions for grouting.

C. Maintain erection tolerances of structural steel within ANSI/AISC 303.

3.3 FIELD CONNECTIONS

A. High-Strength Bolts: Install high-strength bolts in accordance with RCSC's "Specification for Structural Joints Using High-Strength Bolts" for bolt and joint type specified.

1. Joint Type: Snug tightened or Pretensioned.

B. Weld Connections: Comply with AWS D1.1/D1.1M for tolerances, appearances, welding procedure specifications, weld quality, and methods used in correcting welding work.

1. Comply with ANSI/AISC 303 and ANSI/AISC 360 for bearing, alignment, adequacy of temporary connections, and removal of paint on surfaces adjacent to field welds.

3.4 FIELD QUALITY CONTROL

A. Special Inspections: Owner will engage a special inspector to perform the following special inspections:

1. Verify structural-steel materials and inspect steel frame joint details.
2. Verify weld materials and inspect welds.
3. Verify connection materials and inspect high-strength bolted connections.

B. Testing Agency: Engage a qualified testing agency to perform tests and inspections.

1. Bolted Connections: Inspect and test bolted connections in accordance with RCSC's "Specification for Structural Joints Using High-Strength Bolts."
2. Welded Connections: Visually inspect field welds in accordance with AWS D1.1/D1.1M.

a. In addition to visual inspection, test and inspect field welds in accordance with AWS D1.1/D1.1M and the following inspection procedures, at testing agency's option:

1) Liquid Penetrant Inspection: ASTM E165/E165M.
2) Magnetic Particle Inspection: ASTM E709; performed on root pass and on finished weld. Cracks or zones of incomplete fusion or penetration are not accepted.
3) Ultrasonic Inspection: ASTM E164.
4) Radiographic Inspection: ASTM E94/E94M.

END OF SECTION 051200

This page intentionally left blank.

SECTION 053100 - STEEL DECKING

PART 1 - GENERAL

1.1 SUMMARY

A. Section Includes:

1. Composite floor deck.

1.2 ACTION SUBMITTALS

A. Product Data: For each type of deck, accessory, and product indicated.

B. Shop Drawings:

1. Include layout and types of deck panels, anchorage details, reinforcing channels, pans, cut deck openings, special jointing, accessories, and attachments to other construction.

1.3 INFORMATIONAL SUBMITTALS

A. Welding certificates.

B. Product Certificates: For each type of steel deck.

C. Evaluation reports.

D. Field quality-control reports.

1.4 QUALITY ASSURANCE

A. Testing Agency Qualifications: Qualified according to ASTM E329 for testing indicated.

B. Welding Qualifications: Qualify procedures and personnel according to AWS D1.3/D1.3M, "Structural Welding Code - Sheet Steel."

PART 2 - PRODUCTS

2.1 PERFORMANCE REQUIREMENTS

A. AISI Specifications: Comply with calculated structural characteristics of steel deck according to AISI's "North American Specification for the Design of Cold-Formed Steel Structural Members."

2.2 COMPOSITE FLOOR DECK

A. Composite Floor Deck: Fabricate panels, with integrally embossed or raised pattern ribs and interlocking side laps, to comply with "SDI Specifications and Commentary for

Composite Steel Floor Deck," in SDI Publication No. 31, with the minimum section properties indicated, and with the following:

1. Prime-Painted Steel Sheet: ASTM A1008/A1008M, Structural Steel (SS), Grade 33 (230) minimum, with top surface phosphatized and unpainted and underside surface shop primed with manufacturers' standard [gray] [or] [white] baked-on, rust-inhibitive primer.
2. Galvanized-Steel Sheet: ASTM A653/A653M, Structural Steel (SS), Grade 33 (230), G60 (Z180) zinc coating.
3. Galvanized and Shop-Primed Steel Sheet: ASTM A653/A653M, Structural Steel (SS), Grade 33 (230), G60 (Z180) zinc coating; with unpainted top surface and cleaned and pretreated bottom surface primed with manufacturer's standard baked-on, rust-inhibitive primer.
4. Profile Depth: 1-1/2 inches (38 mm)
5. Retain one steel thickness in "Design Uncoated-Steel Thickness" Subparagraph below or revise to suit Project.

2.3 ACCESSORIES

A. General: Provide manufacturer's standard accessory materials for deck that comply with requirements indicated.

B. Mechanical Fasteners: Corrosion-resistant, low-velocity, power-actuated or pneumatically driven carbon-steel fasteners; or self-drilling, self-threading screws.

C. Side-Lap Fasteners: Corrosion-resistant, hexagonal washer head; self-drilling, carbon-steel screws, No. 10 (4.8-mm) minimum diameter.

D. Flexible Closure Strips: Vulcanized, closed-cell, synthetic rubber.

E. Miscellaneous Sheet Metal Deck Accessories: Steel sheet, minimum yield strength of 33,000 psi (230 MPa), not less than 0.0359-inch (0.91-mm) design uncoated thickness, of same material and finish as deck; of profile indicated or required for application.

F. Flat Sump Plates: Single-piece steel sheet, 0.0747 inch (1.90 mm) thick, of same material and finish as deck. For drains, cut holes in the field.

G. Galvanizing Repair Paint: ASTM A780/A780M SSPC-Paint 20 with dry film containing a minimum of 94 percent zinc dust by weight].

H. Repair Paint: Manufacturer's standard rust-inhibitive primer of same color as primer.

PART 3 - EXECUTION

3.1 INSTALLATION, GENERAL

A. Install deck panels and accessories according to applicable specifications and commentary in SDI Publication No. 31, manufacturer's written instructions, and requirements in this Section.

B. Place deck panels flat and square and fasten to supporting frame without warp or deflection.

C. Cut and neatly fit deck panels and accessories around openings and other work projecting through or adjacent to deck.

D. Provide additional reinforcement and closure pieces at openings as required for strength, continuity of deck, and support of other work.

E. Comply with AWS requirements and procedures for manual shielded metal arc welding, appearance and quality of welds, and methods used for correcting welding work.

F. Mechanical fasteners may be used in lieu of welding to fasten deck. Locate mechanical fasteners and install according to deck manufacturer's written instructions.

G. Pour Stops and Girder Fillers: Weld steel sheet pour stops and girder fillers to supporting structure according to SDI recommendations unless otherwise indicated.

H. Floor-Deck Closures: Weld steel sheet column closures, cell closures, and Z-closures to deck, according to SDI recommendations, to provide tight-fitting closures at open ends of ribs and sides of deck.

3.2 FIELD QUALITY CONTROL

A. Testing Agency: Owner will engage a qualified testing agency to perform tests and inspections.

B. Field welds will be subject to inspection.

C. Prepare test and inspection reports.

3.3 PROTECTION

A. Galvanizing Repairs: Prepare and repair damaged galvanized coatings on both surfaces of deck with galvanized repair paint according to ASTM A780/A780M and manufacturer's written instructions.

B. Repair Painting: Wire brush and clean rust spots, welds, and abraded areas on both surfaces of prime-painted deck immediately after installation and apply repair paint.

END OF SECTION 053100

This page intentionally left blank.

SECTION 054000 - COLD-FORMED METAL FRAMING

PART 1 - GENERAL

1.1 SUMMARY

A. Section Includes:

1. Exterior non-load-bearing wall framing.

1.2 PREINSTALLATION MEETINGS

A. Preinstallation Conference: Conduct conference at Project site.

1.3 ACTION SUBMITTALS

A. Product Data: For each type of product.

B. Shop Drawings:

1. Include layout, spacings, sizes, thicknesses, and types of cold-formed steel framing; fabrication; and fastening and anchorage details, including mechanical fasteners.
2. Indicate reinforcing channels, opening framing, supplemental framing, strapping, bracing, bridging, splices, accessories, connection details, and attachment to adjoining work.

1.4 INFORMATIONAL SUBMITTALS

A. Welding certificates.

B. Product certificates.

C. Product test reports.

D. Evaluation Reports: For post-installed anchors and power-actuated fasteners, from ICC-ES or other qualified testing agency acceptable to authorities having jurisdiction.

1.5 QUALITY ASSURANCE

A. Testing Agency Qualifications: Qualified according to ASTM E329 for testing indicated.

B. Product Tests: Mill certificates or data from a qualified independent testing agency.

C. Welding Qualifications: Qualify procedures and personnel according to the following:

1. AWS D1.1/D1.1M, "Structural Welding Code - Steel."
2. AWS D1.3/D1.3M, "Structural Welding Code - Sheet Steel."

D. Comply with AISI S230 "Standard for Cold-Formed Steel Framing - Prescriptive Method for One and Two Family Dwellings."

PART 2 - PRODUCTS

2.1 MANUFACTURERS

A. ClarkDietrich

B. MarinoWARE

C. MBA Building Supplies

2.2 PERFORMANCE REQUIREMENTS

A. Cold-Formed Steel Framing Standards: Unless more stringent requirements are indicated, framing shall comply with AISI S100, AISI S200, and the following:

1. Wall Studs: AISI S211.
2. Lateral Design: AISI S213.

2.3 COLD-FORMED STEEL FRAMING MATERIALS

A. Steel Sheet: ASTM A1003/A1003M, Structural Grade, Type H, metallic coated, of grade and coating designation as follows:

1. Grade: ST33H (ST230H) or ST50H (ST340H) As required by structural performance.
2. Coating: G90 (Z275) or equivalent.

B. Steel Sheet for Drift Clips: ASTM A653/A653M, structural steel, zinc coated, of grade and coating as follows:

1. Grade: ST33H (ST230H) or ST50H (ST340H) As required by structural performance.
2. Coating: G90 (Z275) or equivalent.

2.4 EXTERIOR NON-LOAD-BEARING WALL FRAMING

A. Steel Studs: Manufacturer's standard C-shaped steel studs, of web depths indicated, punched, with stiffened flanges, and as follows:

1. Minimum Base-Metal Thickness: .0428 inch (1.09 mm) dimension.
2. Flange Width: 1-5/8 inches (41 mm)] [2 inches (51 mm).
3. Designation: 362S137-33

B. Steel Track: Manufacturer's standard U-shaped steel track, of web depths indicated, unpunched, with unstiffened flanges, and matching minimum base-metal thickness of steel studs.

C. Drift Clips: Manufacturer's standard bypass or head clips, capable of isolating wall stud from upward and downward vertical displacement and lateral drift of primary structure through positive mechanical attachment to stud web and structure.

2.5 FRAMING ACCESSORIES

A. Fabricate steel-framing accessories from ASTM A1003/A1003M, Structural Grade, Type H, metallic coated steel sheet, of same grade and coating designation used for framing members.

B. Provide accessories of manufacturer's standard thickness and configuration, unless otherwise indicated.

2.6 ANCHORS, CLIPS, AND FASTENERS

A. Steel Shapes and Clips: ASTM A36/A36M, zinc coated by hot-dip process according to ASTM A123/A123M.

B. Power-Actuated Anchors: Fastener systems with working capacity greater than or equal to the design load, according to an evaluation report acceptable to authorities having jurisdiction, based on ICC-ES AC70.

C. Mechanical Fasteners: ASTM C1513, corrosion-resistant-coated, self-drilling, self-tapping, steel drill screws.

1. Head Type: Low-profile head beneath sheathing; manufacturer's standard elsewhere.

2.7 MISCELLANEOUS MATERIALS

A. Shims: Load-bearing, high-density, multimonomer, nonleaching plastic; or cold-formed steel of same grade and metallic coating as framing members supported by shims.

PART 3 - EXECUTION

3.1 PREPARATION

A. Before sprayed fire-resistive materials are applied, attach continuous angles, supplementary framing, or tracks to structural members indicated to receive sprayed fire-resistive materials.

B. After applying sprayed fire-resistive materials, remove only as much of these materials as needed to complete installation of cold-formed framing without reducing thickness of fire-resistive materials below that required to obtain fire-resistance ratings indicated. Protect remaining fire-resistive materials from damage.

C. Install load-bearing shims or grout between the underside of load-bearing wall bottom track and the top of foundation wall or slab at locations with a gap larger than 1/4 inch (6 mm) to ensure a uniform bearing surface on supporting concrete or masonry construction.

D. Install sealer gaskets at the underside of wall bottom track or rim track and at the top of foundation wall or slab at stud or joist locations.

3.2 INSTALLATION, GENERAL

A. Cold-formed steel framing may be shop or field fabricated for installation, or it may be field assembled.

B. Install cold-formed steel framing according to AISI S200, AISI S202, and manufacturer's written instructions unless more stringent requirements are indicated.

C. Install cold-formed steel framing and accessories plumb, square, and true to line, and with connections securely fastened.

D. Install framing members in one-piece lengths unless splice connections are indicated for track or tension members.

E. Install temporary bracing and supports to secure framing and support loads equal to those for which structure was designed. Maintain braces and supports in place, undisturbed, until entire integrated supporting structure has been completed and permanent connections to framing are secured.

F. Do not bridge building expansion joints with cold-formed steel framing. Independently frame both sides of joints.

G. Install insulation, specified in Section 072100 "Thermal Insulation," in framing-assembly members, such as headers, sills, boxed joists, and multiple studs at openings, that are inaccessible on completion of framing work.

H. Fasten hole-reinforcing plate over web penetrations that exceed size of manufacturer's approved or standard punched openings.

3.3 EXTERIOR NON-LOAD-BEARING WALL INSTALLATION

A. Install continuous tracks sized to match studs. Align tracks accurately and securely anchor to supporting structure.

B. Fasten both flanges of studs to top and bottom track unless otherwise indicated. Space studs as follows:

1. Stud Spacing: 16 inches (406 mm).

C. Set studs plumb, except as needed for diagonal bracing or required for nonplumb walls or warped surfaces and similar requirements.

D. Isolate non-load-bearing steel framing from building structure to prevent transfer of vertical loads while providing lateral support.

1. Install single deep-leg deflection tracks and anchor to building structure.
2. Install double deep-leg deflection tracks and anchor outer track to building structure.
3. Connect vertical deflection clips to [bypassing] [infill] studs and anchor to building structure.
4. Connect drift clips to cold-formed steel framing and anchor to building structure.

E. Install horizontal bridging in wall studs, spaced vertically in rows indicated on Shop Drawings but not more than 48 inches (1220 mm) apart. Fasten at each stud intersection.

1. Channel Bridging: Cold-rolled steel channel, welded or mechanically fastened to webs of punched studs.
2. Strap Bridging: Combination of flat, taut, steel sheet straps of width and thickness indicated and stud-track solid blocking of width and thickness to match studs. Fasten flat straps to stud flanges and secure solid blocking to stud webs or flanges.
3. Bar Bridging: Proprietary bridging bars installed according to manufacturer's written instructions.

F. Top Bridging for Single Deflection Track: Install row of horizontal bridging within 12 inches (305 mm) of single deflection track. Install a combination of bridging and stud or stud-track solid blocking of width and thickness matching studs, secured to stud webs or flanges.

1. Install solid blocking at 96-inch (2440-mm) centers.

G. Install miscellaneous framing and connections, including stud kickers, web stiffeners, clip angles, continuous angles, anchors, and fasteners, to provide a complete and stable wall-framing system.

3.4 ERECTION TOLERANCES

A. Install cold-formed steel framing level, plumb, and true to line to a maximum allowable tolerance variation of 1/8 inch in 10 feet (1:960) and as follows:

1. Space individual framing members no more than plus or minus 1/8 inch (3 mm) from plan location. Cumulative error shall not exceed minimum fastening requirements of sheathing or other finishing materials.

3.5 FIELD QUALITY CONTROL

A. Testing: Owner will engage a qualified independent testing and inspecting agency to perform field tests and inspections and prepare test reports.

B. Field and shop welds will be subject to testing and inspecting.

C. Testing agency will report test results promptly and in writing to Contractor and Architect.

D. Cold-formed steel framing will be considered defective if it does not pass tests and inspections.

E. Additional testing and inspecting, at Contractor's expense, will be performed to determine compliance of replaced or additional work with specified requirements.

3.6 REPAIRS AND PROTECTION

A. Galvanizing Repairs: Prepare and repair damaged galvanized coatings on fabricated and installed cold-formed steel framing with galvanized repair paint according to ASTM A780/A780M and manufacturer's written instructions.

END OF SECTION 054000

SECTION 061053 - MISCELLANEOUS ROUGH CARPENTRY

PART 1 - GENERAL

1.1 SUMMARY

A. Section Includes:

1. Wood blocking, and nailers.
2. Wood sleepers.
3. Plywood backing panels.

1.2 ACTION SUBMITTALS

A. Product Data: For each type of process and factory-fabricated product.

1.3 INFORMATIONAL SUBMITTALS

A. Evaluation Reports: For the following, from ICC-ES:

1. Power-driven fasteners.

PART 2 - PRODUCTS

2.1 WOOD PRODUCTS, GENERAL

A. Lumber: DOC PS 20 and applicable rules of grading agencies indicated. If no grading agency is indicated, provide lumber that complies with the applicable rules of any rules-writing agency certified by the ALSC Board of Review. Provide lumber graded by an agency certified by the ALSC Board of Review to inspect and grade lumber under the rules indicated.

1. Factory mark each piece of lumber with grade stamp of grading agency.
2. For exposed lumber indicated to receive a stained or natural finish, mark grade stamp on end or back of each piece.
3. Dress lumber, S4S, unless otherwise indicated.

B. Maximum Moisture Content of Lumber: 19 percent.

2.2 DIMENSION LUMBER FRAMING

A. Non-Load-Bearing Interior Partitions: Construction or No. 2 grade of any species.

B. Other Framing: Construction or No. 2 grade of any of the following species:

1. Douglas fir-larch; WCLIB or WWPA.
2. Douglas fir-south; WWPA.
3. Hem-fir; WCLIB or WWPA.
4. Douglas fir-larch (north); NLGA.

2.3 MISCELLANEOUS LUMBER

A. General: Provide miscellaneous lumber indicated and lumber for support or attachment of other construction, including the following:

1. Blocking.
2. Nailers.

B. Dimension Lumber Items: Construction or No. 2 grade lumber of any species.

C. Concealed Boards: 19 npercent maximum moisture content of any of the following

1. Mixed southern pine or southern pine, [No. 2] [No. 3] grade; SPIB.
2. Eastern softwoods, [No. 2] [No. 3] Common grade; NELMA.
3. Northern species, [No. 2] [No. 3] Common grade; NLGA.
4. Western woods, [Construction or No. 2 Common] [Standard or No. 3 Common] grade; WCLIB or WWPA.

2.4 PLYWOOD BACKING PANELS

A. Equipment Backing Panels: Plywood, DOC PS 1, Exterior, C-C Plugged in thickness indicated or, if not indicated, not less than 3/4-inch (19-mm) nominal thickness.

2.5 FASTENERS

A. General: Provide fasteners of size and type indicated that comply with requirements specified in this article for material and manufacture.

1. Where carpentry is exposed to weather, in ground contact, pressure-preservative treated, or in area of high relative humidity, provide fasteners with hot-dip zinc coating complying with ASTM A153/A153M.

B. Screws for Fastening to Metal Framing: ASTM C1002 length as recommended by screw manufacturer for material being fastened.

C. Power-Driven Fasteners: Fastener systems with an evaluation report acceptable to authorities having jurisdiction, based on ICC-ES AC70.

2.6 MISCELLANEOUS MATERIALS

A. Adhesives for Gluing Furring and Sleepers to Concrete or Masonry: Formulation complying with ASTM D3498 that is approved for use indicated by adhesive manufacturer.

B. Flexible Flashing: Composite, self-adhesive, flashing product consisting of a pliable, butyl rubber or rubberized-asphalt compound, bonded to a high-density polyethylene film, aluminum foil, or spunbonded polyolefin to produce an overall thickness of not less than 0.025 inch (0.6 mm).

PART 3 - EXECUTION

3.1 INSTALLATION, GENERAL

A. Framing Standard: Comply with AF&PA's WCD 1, "Details for Conventional Wood Frame Construction," unless otherwise indicated.

B. Set carpentry to required levels and lines, with members plumb, true to line, cut, and fitted. Fit carpentry accurately to other construction. Locate furring, nailers, blocking, and similar supports to comply with requirements for attaching other construction.

C. Install plywood backing panels by fastening to studs; coordinate locations with utilities requiring backing panels.

D. Do not splice structural members between supports unless otherwise indicated.

E. Comply with AWPA M4 for applying field treatment to cut surfaces of preservative-treated lumber.

F. Securely attach carpentry work to substrate by anchoring and fastening as indicated, complying with the following:

1. Table 2304.9.1, "Fastening Schedule," in ICC's International Building Code.
2. Table R602.3(1), "Fastener Schedule for Structural Members," and Table R602.3(2), "Alternate Attachments," in ICC's International Residential Code for One- and Two-Family Dwellings.
3. ICC-ES evaluation report for fastener.

3.2 PROTECTION

A. Protect wood that has been treated with inorganic boron (SBX) from weather. If, despite protection, inorganic boron-treated wood becomes wet, apply EPA-registered borate treatment. Apply borate solution by spraying to comply with EPA-registered label.

END OF SECTION 061053

This page intentionally left blank.

SECTION 061600 - SHEATHING

PART 1 - GENERAL

1.1 SUMMARY

A. Section Includes:

1. Wall sheathing.

1.2 ACTION SUBMITTALS

A. Product Data: For each type of process and factory-fabricated product.

PART 2 - PRODUCTS

2.1 WOOD PANEL PRODUCTS

A. Emissions: Products shall meet the testing and product requirements of the California Department of Public Health's "Standard Method for the Testing and Evaluation of Volatile Organic Chemical Emissions from Indoor Sources Using Environmental Chambers."

B. Kiln-dry material after treatment to a maximum moisture content of 15 percent.

2.2 WALL SHEATHING

A. Gypsum Wall Sheathing: Fastened to metal framing.

B. Manufacturers: Dens Glass Gold by Georgia- Pacific or USG.

C. Thickness: 1/2”

2.3 FASTENERS

A. General: Provide fasteners of size and type indicated that comply with requirements specified in this article for material and manufacture.

1. For wall sheathing, provide fasteners with hot-dip zinc coating complying with ASTM A153/A153M.
2. For roof and wall sheathing, provide fasteners with organic-polymer or other corrosion-protective coating having a salt-spray resistance of more than 800 hours according to ASTM B117.

PART 3 - EXECUTION

3.1 INSTALLATION, GENERAL

A. Do not use materials with defects that impair quality of sheathing or pieces that are too small to use with minimum number of joints or optimum joint arrangement. Arrange joints so that pieces do not span between fewer than three support members.

B. Cut panels at penetrations, edges, and other obstructions of work; fit tightly against abutting construction unless otherwise indicated.

C. Securely attach to substrate by fastening as indicated, complying with the following:

1. Table 2304.9.1, "Fastening Schedule," in the ICC's International Building Code.
2. Table R602.3(1), "Fastener Schedule for Structural Members," and Table R602.3(2), "Alternate Attachments," in the ICC's International Residential Code for One- and Two-Family Dwellings.
3. ICC-ES evaluation report for fastener.

D. Coordinate wall sheathing installation with flashing and joint-sealant installation so these materials are installed in sequence and manner that prevent exterior moisture from passing through completed assembly.

E. Do not bridge building expansion joints; cut and space edges of panels to match spacing of structural support elements.

3.2 GYPSUM SHEATHING INSTALLATION

A. Comply with GA-253 and with manufacturer's written instructions.

1. Fasten gypsum sheathing to wood framing with [nails] [or] [screws].
2. Fasten gypsum sheathing to cold-formed metal framing with screws.
3. Install panels with a 3/8-inch (9.5-mm) gap where non-load-bearing construction abuts structural elements.
4. Install panels with a 1/4-inch (6.4-mm) gap where they abut masonry or similar materials that might retain moisture, to prevent wicking.

B. Seal sheathing joints according to sheathing manufacturer's written instructions.

1. Apply elastomeric sealant to joints and fasteners and trowel flat. Apply sufficient amount of sealant to completely cover joints and fasteners after troweling. Seal other penetrations and openings.
2. Apply glass-fiber sheathing tape to glass-mat gypsum sheathing joints and apply and trowel sealant to embed entire face of tape in sealant. Apply sealant to exposed fasteners with a trowel so fasteners are completely covered. Seal other penetrations and openings.

END OF SECTION 061600

SECTION 072100 - THERMAL INSULATION

PART 1 - GENERAL

1.1 SUMMARY

A. Section Includes:

1. Extruded polystyrene foam-plastic board.
2. Glass-fiber blanket.

1.2 ACTION SUBMITTALS

A. Product Data: For each type of product.

1.3 INFORMATIONAL SUBMITTALS

A. Product test reports.

B. Research reports.

PART 2 - PRODUCTS

2.1 EXTRUDED POLYSTYRENE FOAM-PLASTIC BOARD

A. Extruded polystyrene boards in this article are also called "XPS boards."

B. Extruded Polystyrene Board, Type IV: ASTM C578, Type IV, 25-psi (173-kPa) minimum compressive strength; unfaced; maximum flame-spread and smoke-developed indexes of 25 and 450, respectively, per ASTM E84.

1. Dow Chemical Co.
2. Kingspan Insulation Limited
3. Owens Corning
4. Fire Propagation Characteristics: Passes NFPA 285 testing as part of an approved assembly.

2.2 GLASS-FIBER BLANKET

A. Glass-Fiber Blanket, Kraft Faced: ASTM C665, Type II (nonreflective faced), Class C (faced surface not rated for flame propagation); Category 1 (membrane is a vapor barrier).

1. CertainTeed Corp.
2. Johns Manville
3. Knauf Insulation
4. Owens Corning

2.3 ACCESSORIES

A. Insulation for Miscellaneous Voids:

1. Glass-Fiber Insulation: ASTM C764, Type II, loose fill; with maximum flame-spread and smoke-developed indexes of 5, per ASTM E84.
2. Spray Polyurethane Foam Insulation: ASTM C1029, Type II, closed cell, with maximum flame-spread and smoke-developed indexes of 75 and 450, respectively, per ASTM E84.

B. Insulation Anchors, Spindles, and Standoffs: As recommended by manufacturer.

C. Adhesive for Bonding Insulation: Product compatible with insulation and air and water barrier materials, and with demonstrated capability to bond insulation securely to substrates without damaging insulation and substrates.

PART 3 - EXECUTION

3.1 INSTALLATION, GENERAL

A. Comply with insulation manufacturer's written instructions applicable to products and applications.

B. Install insulation that is undamaged, dry, and unsoiled and that has not been left exposed to ice, rain, or snow at any time.

C. Extend insulation to envelop entire area to be insulated. Fit tightly around obstructions and fill voids with insulation. Remove projections that interfere with placement.

D. Provide sizes to fit applications and selected from manufacturer's standard thicknesses, widths, and lengths. Apply single layer of insulation units unless multiple layers are otherwise shown or required to make up total thickness or to achieve R-value.

3.2 INSTALLATION OF FOUNDATION WALL INSULATION

A. Butt panels together for tight fit.

B. Anchor Installation: Install board insulation on concrete substrates by adhesively attached, spindle-type insulation anchors.

C. Adhesive Installation: Install with adhesive or press into tacky waterproofing or dampproofing according to manufacturer's written instructions.

3.3 INSTALLATION OF CAVITY-WALL INSULATION

A. Foam-Plastic Board Insulation: Install pads of adhesive spaced approximately 24 inches (610 mm) o.c. both ways on inside face and as recommended by manufacturer. Fit courses of insulation between wall ties and other obstructions, with edges butted tightly in both directions. Press units firmly against inside substrates.

1. Supplement adhesive attachment of insulation by securing boards with two-piece wall ties designed for this purpose and specified in Section 042000 "Unit Masonry."

3.4 INSTALLATION OF INSULATION IN FRAMED CONSTRUCTION

A. Blanket Insulation: Install in cavities formed by framing members according to the following requirements:

1. Use insulation widths and lengths that fill the cavities formed by framing members. If more than one length is required to fill the cavities, provide lengths that will produce a snug fit between ends.
2. Place insulation in cavities formed by framing members to produce a friction fit between edges of insulation and adjoining framing members.
3. Maintain 3-inch (76-mm) clearance of insulation around recessed lighting fixtures not rated for or protected from contact with insulation.
4. For metal-framed wall cavities where cavity heights exceed 96 inches (2438 mm), support unfaced blankets mechanically and support faced blankets by taping flanges of insulation to flanges of metal studs.

B. Miscellaneous Voids: Install insulation in miscellaneous voids and cavity spaces where required to prevent gaps in insulation using the following materials:

1. Glass-Fiber Insulation: Compact to approximately 40 percent of normal maximum volume equaling a density of approximately 2.5 lb/cu. ft. (40 kg/cu. m).
2. Spray Polyurethane Insulation: Apply according to manufacturer's written instructions.

END OF SECTION 072100

This page intentionally left blank.

SECTION 072726 - FLUID-APPLIED MEMBRANE AIR BARRIERS

PART 1 - GENERAL

1.1 SUMMARY

A. Section Includes:

1. Vapor-retarding, fluid-applied air barriers.

1.2 PREINSTALLATION MEETINGS

A. Preinstallation Conference: Conduct conference at Project site

1.3 ACTION SUBMITTALS

A. Product Data: For each type of product.

B. Shop Drawings: For air-barrier assemblies.

1. Include details for substrate joints and cracks, counterflashing strips, penetrations, inside and outside corners, terminations, and tie-ins with adjoining construction.

1.4 INFORMATIONAL SUBMITTALS

A. Product certificates.

B. Product test reports.

C. Field quality-control reports.

1.5 QUALITY ASSURANCE

A. Installer Qualifications: An entity that employs installers and supervisors who are trained and approved by manufacturer.

B. Mockups: Build mockups to set quality standards for materials and execution.

1. Build integrated mockups of exterior wall assembly,150 sq. ft. (14 sq. m) incorporating backup wall construction, external cladding, window, storefront, door frame and sill, insulation, ties and other penetrations, and flashing to demonstrate surface preparation, crack and joint treatment, application of air barriers, and sealing of gaps, terminations, and penetrations of air-barrier assembly.

a. Coordinate construction of mockups to permit inspection and testing of air barrier before external insulation and cladding are installed.
b. Include junction with roofing membrane, building corner condition, and foundation wall intersection.

PART 2 - PRODUCTS

2.1 PERFORMANCE REQUIREMENTS

A. Air-Barrier Performance: Air-barrier assembly and seals with adjacent construction shall be capable of performing as a continuous air barrier and as a liquid-water drainage plane flashed to discharge to the exterior incidental condensation or water penetration. Air-barrier assemblies shall be capable of accommodating substrate movement and of sealing substrate expansion and control joints, construction material changes, penetrations, and transitions at perimeter conditions without deterioration and air leakage exceeding specified limits.

B. Air-Barrier Assembly Air Leakage: Maximum 0.04 cfm/sq. ft. of surface area at 1.57 lbf/sq. ft. (0.2 L/s x sq. m of surface area at 75 Pa), when tested according to ASTM E 2357.

2.2 HIGH-BUILD AIR BARRIERS, VAPOR RETARDING OVER EXTERIOR GYPSUM BOARD SHEATHING.

A. High-Build, Vapor-Retarding Air Barrier: synthetic polymer membrane with an installed dry film thickness, according to manufacturer's written instructions, of 35 mils (0.9 mm) or thicker over smooth, void-free substrates.

1. Synthetic Polymer Type:

    a. Carlisle Coatings
    b. Henry Company
    c. W.R. Meadows, Inc.

2. Physical and Performance Properties:

    a. Air Permeance: Maximum 0.004 cfm/sq. ft. of surface area at 1.57-lbf/sq. ft. (0.02 L/s x sq. m of surface area at 75-Pa) pressure difference; ASTM E 2178.
    b. Vapor Permeance: Maximum 0.1 perm (5.8 ng/Pa x s x sq. m), ASTM E 96/E 96M, Desiccant Method.
    c. Ultimate Elongation: Minimum 500 percent; ASTM D 412, Die C.
    d. Adhesion to Substrate: Minimum 30 lbf/sq. in. (207 kPa) when tested according to ASTM D 4541.
    e. Fire Propagation Characteristics: Passes NFPA 285 testing as part of an approved assembly.
    f. UV Resistance: Can be exposed to sunlight for 90 days according to manufacturer's written instructions.

2.3 ACCESSORY MATERIALS

A. Requirement: Provide primers, transition strips, termination strips, joint reinforcing fabric and strips, joint sealants, counterflashing strips, flashing sheets and metal termination bars, termination mastic, substrate patching materials, adhesives, tapes, foam sealants, lap sealants, and other accessory materials that are recommended in writing by air-

barrier manufacturer to produce a complete air-barrier assembly and that are compatible with primary air-barrier material and adjacent construction to which they may seal.

PART 3 - EXECUTION

3.1 SURFACE PREPARATION

A. Clean, prepare, treat, fill, and seal substrate and joints and cracks in substrate according to manufacturer's written instructions and details. Provide clean, dust-free, and dry substrate for air-barrier application.

B. Mask off adjoining surfaces not covered by air barrier to prevent spillage and overspray affecting other construction.

C. Remove fins, ridges, mortar, and other projections and fill honeycomb, aggregate pockets, holes, and other voids in concrete with substrate-patching material.

D. Remove excess mortar from masonry ties, shelf angles, and other obstructions.

E. At changes in substrate plane, apply sealant or termination mastic beads at sharp corners and edges to form a smooth transition from one plane to another.

F. Bridge isolation joints, expansion joints, and discontinuous wall-to-wall, deck-to-wall, and deck-to-deck joints with air-barrier accessory material that accommodates joint movement according to manufacturer's written instructions and details.

3.2 INSTALLATION

A. Install materials according to air-barrier manufacturer's written instructions and details to form a seal with adjacent construction and ensure continuity of air and water barrier.

1. Coordinate the installation of air barrier with installation of roofing membrane and base flashing to ensure continuity of air barrier with roofing membrane.
2. Install transition strip on roofing membrane or base flashing so that a minimum of 3 inches (75 mm) of coverage is achieved over each substrate.
3. Unless manufacturer recommends in writing against priming, apply primer to substrates at required rate and allow it to dry.
4. Apply primer to substrates at required rate and allow it to dry. Limit priming to areas that will be covered by air-barrier material on same day. Reprime areas exposed for more than 24 hours.

B. Connect and seal exterior wall air-barrier material continuously to roofing-membrane air barrier, concrete below-grade structures, floor-to-floor construction, exterior glazing and window systems, glazed curtain-wall systems, storefront systems, exterior louvers, exterior door framing, and other construction used in exterior wall openings, using accessory materials.

C. Wall Openings: Prime concealed, perimeter frame surfaces of windows, curtain walls, storefronts, and doors. Apply transition strip so that a minimum of 3 inches (75 mm) of

coverage is achieved over each substrate. Maintain 3 inches (75 mm) of full contact over firm bearing to perimeter frames, with not less than 1 inch (25 mm) of full contact.

D. Repair punctures, voids, and deficient lapped seams in strips and transition strips. Slit and flatten fishmouths and blisters. Patch with transition strips extending 6 inches (150 mm) beyond repaired areas in strip direction.

E. High-Build Air Barriers: Apply continuous unbroken air-barrier material to substrates according to the following thickness. Apply air-barrier material in full contact around protrusions such as masonry ties.

1. Vapor-Retarding, High-Build Air Barrier: Total dry film thickness [as recommended in writing by manufacturer to comply with performance requirements, but not less than 35 mils (0.9 mm) applied in two equal coats.

F. Do not cover air barrier until it has been tested and inspected by testing agency.

G. Correct deficiencies in or remove air barrier that does not comply with requirements; repair substrates and reapply air-barrier components.

3.3 FIELD QUALITY CONTROL

A. Testing Agency: Engage a qualified testing agency to perform tests and inspections.

B. Tests: As determined by testing agency from among the following tests:

1. Air-barrier dry film thickness.
2. Air-Leakage-Location Testing: Air-barrier assemblies will be tested for evidence of air leakage according to ASTM E 1186, chamber pressurization or depressurization with smoke tracers.
3. Air-Leakage-Volume Testing: Air-barrier assemblies will be tested for air-leakage rate according to ASTM E 783 or ASTM E 2357.
4. Adhesion Testing: Air-barrier assemblies will be tested for required adhesion to substrate according to ASTM D 4541 for each 600 sq. ft. (56 sq. m) of installed air barrier or part thereof.

C. Air barriers will be considered defective if they do not pass tests and inspections.

1. Apply additional air-barrier material, according to manufacturer's written instructions, where inspection results indicate insufficient thickness.
2. Remove and replace deficient air-barrier components for retesting as specified above.

D. Repair damage to air barriers caused by testing; follow manufacturer's written instructions.

E. Prepare test and inspection reports.

3.4 CLEANING AND PROTECTION

A. Protect air-barrier system from damage during application and remainder of construction period, according to manufacturer's written instructions.

B. Remove masking materials after installation.

END OF SECTION 072726

This page intentionally left blank.

SECTION 074213– ALUMINUM COMPOSITE PANELS

PART 1 - GENERAL

1.1 SUMMARY

A. Section Includes:

1. Concealed-fastener, 2-piece capped metal wall panels with honeycomb core for exterior ceiling panels and exterior wall cladding.

1.2 PREINSTALLATION MEETINGS

A. Preinstallation Conference: Conduct conference at Project site.

1.3 ACTION SUBMITTALS

A. Product Data: For each type of product.

B. Shop Drawings: Include fabrication and installation layouts of metal panels; details of edge conditions, joints, panel profiles, corners, anchorages, attachment system, trim, flashings, closures, and accessories; and special details.

C. Samples: For each type of metal panel indicated.

1.4 INFORMATIONAL SUBMITTALS

A. Product test reports.

B. Warranties: Samples of special warranties.

1.5 CLOSEOUT SUBMITTALS

A. Maintenance data.

1.6 QUALITY ASSURANCE

A. Installer Qualifications: An entity that employs installers and supervisors who are trained and approved by manufacturer.

1.7 WARRANTY

A. Special Warranty: Manufacturer's standard form in which manufacturer agrees to repair or replace components of metal panel systems that fail in materials or workmanship within specified warranty period.

1. Warranty Period: 2 years from date of Substantial Completion.

B. Special Warranty on Panel Finishes: Manufacturer's standard form in which manufacturer agrees to repair finish or replace metal panels that show evidence of deterioration of factory-applied finishes within specified warranty period.

1. Finish Warranty Period: 20 years from date of Substantial Completion.

PART 2 - PRODUCTS

2.1 PERFORMANCE REQUIREMENTS

A. Structural Performance: Provide metal panel systems capable of withstanding the effects of the following loads, based on testing according to ASTM E 1592:

1. Wind Loads: 90 MPH, 20 psf wind pressure.
2. Deflection Limits: For wind loads, no greater than 1/240 of the span.

B. Air Infiltration: Air leakage of not more than 0.06 cfm/sq. ft. (0.3 L/s per sq. m) when tested according to ASTM E 283 at the following test-pressure difference:

1. Test-Pressure Difference: 1.57 lbf/sq. ft. (75 Pa).

C. Water Penetration under Static Pressure: No water penetration when tested according to ASTM E 331 at the following test-pressure difference:

1. Test-Pressure Difference: 6.24 lbf/sq. ft. (300 Pa).

D. Thermal Movements: Allow for thermal movements from ambient and surface temperature changes by preventing buckling, opening of joints, overstressing of components, failure of joint sealants, failure of connections, and other detrimental effects. Base calculations on surface temperatures of materials due to both solar heat gain and nighttime-sky heat loss.

1. Temperature Change (Range): 120 deg F (67 deg C), ambient; 180 deg F (100 deg C).

E. Fire-Resistance Ratings: Comply with ASTM E 119; testing by a qualified testing agency. Identify products with appropriate markings of applicable testing agency.

1. Indicate design designations from UL's "Fire Resistance Directory" or from the listings of another qualified testing agency.

2.2 CONCEALED-FASTENER ONE PIECE REVEAL JOINT MOLDING:

A. MOLDINGS: Provide factory-formed metal trim moldings including joining seams, edge J-mold, inside corner molding, and outside corner molding.

B. All exposed trims shall match exposed panel finish.

C. Products:

1. ATAS International, Inc. – Sterracore.
2. Laminators Inc. - Omega-Lite
3. Wrisco Industries, Inc.

4. Aluminum Sheet: Coil-coated sheet, ASTM B 209 (ASTM B 209M), alloy as standard with manufacturer, with temper as required to suit forming operations and structural performance required.

    a. Thickness: 0.040 inch (1.02 mm).
    b. Surface: Smooth, flat finish.
    c. Core: corrugated polypropylene.
    d. Finished layers: Smooth, sheet aluminum.
    e. Fire Rating: Class-A, NFPA 285 approved.
    f. Exterior Finish: Two-coat fluoropolymer.
    g. Color: As selected by Architect from manufacturer's full range of standard colors.

5. Panel Coverage: 4'x 8', 4'x 10', 4'x 12'.
6. Panel Core: ¼" Corrugated or Honeycomb Polypropylene.
7. Backer panel: .013 Mill finish aluminum or same as facer finish.
8. Face thickness: 0.024 Smooth aluminum.

2.3 MISCELLANEOUS MATERIALS

A. Miscellaneous Metal Subframing and Furring: ASTM C 645, cold-formed, metallic-coated steel sheet, ASTM A 653/A 653M, G90 (Z275 hot-dip galvanized) coating designation or ASTM A 792/A 792M, Class AZ50 (Class AZM150) aluminum-zinc-alloy coating designation unless otherwise indicated. Provide manufacturer's standard sections as required for support and alignment of metal panel system.

B. Panel Accessories: Provide components required for a complete, weathertight panel system including trim, copings, fasciae, mullions, sills, corner units, clips, flashings, sealants, gaskets, fillers, closure strips, and similar items. Match material and finish of metal panels unless otherwise indicated.

1. Closure Strips: Closed-cell, expanded, cellular, rubber or crosslinked, polyolefin-foam or closed-cell laminated polyethylene; minimum 1-inch- (25-mm-) thick, flexible closure strips; cut or premolded to match metal panel profile. Provide closure strips where indicated or necessary to ensure weathertight construction.

C. Flashing and Trim: Provide flashing and trim formed from same material as metal panels as required to seal against weather and to provide finished appearance. Locations include, but are not limited to, bases, drips, sills, jambs, corners, framed openings, fasciae, reveals, and fillers. Finish flashing and trim with same finish system as adjacent metal panels.

D. Panel Fasteners: Concealed trim fasteners.

E. Panel Sealants: Provide sealant type recommended by manufacturer that are compatible with panel materials, are nonstaining, and do not damage panel finish.

1. Sealant Tape: Pressure-sensitive, 100 percent solids, gray polyisobutylene compound sealant tape with release-paper backing; 1/2 inch (13 mm) wide and 1/8 inch (3 mm) thick.

2. Joint Sealant: ASTM C 920; as recommended in writing by metal panel manufacturer.
3. Butyl-Rubber-Based, Solvent-Release Sealant: ASTM C 1311.

2.4 FABRICATION

A. General: Fabricate and finish metal panels and accessories at the factory, by manufacturer's standard procedures and processes, as necessary to fulfill indicated performance requirements demonstrated by laboratory testing. Comply with indicated profiles and with dimensional and structural requirements.

B. Sheet Metal Flashing and Trim: Fabricate flashing and trim to comply with manufacturer's recommendations and recommendations in SMACNA's "Architectural Sheet Metal Manual" that apply to design, dimensions, metal, and other characteristics of item indicated.

2.5 FINISHES

A. Panels and Accessories:

1. Two-Coat Fluoropolymer: Fluoropolymer finish containing not less than 70 percent PVDF resin by weight in color coat.
2. Concealed Finish: Mill finish or same as exposed face.

PART 3 - EXECUTION

3.1 PREPARATION

A. Miscellaneous Supports: Install subframing, furring, and other miscellaneous panel support members and anchorages according to ASTM C 754 and metal panel manufacturer's written recommendations.

3.2 METAL PANEL INSTALLATION

A. Lap-Seam Metal Panels: Fasten metal panels to supports with fasteners at each lapped joint at location and spacing recommended by manufacturer.

1. Locate and space exposed fasteners in uniform vertical and horizontal alignment. Use proper tools to obtain controlled uniform compression for positive seal without rupture of washer.
2. Install screw fasteners with power tools having controlled torque adjusted to compress washer tightly without damage to washer, screw threads, or panels. Install screws in predrilled holes.
3. Flash and seal panels with weather closures at perimeter of all openings.

B. Watertight Installation:

1. Apply a continuous ribbon of sealant or tape to seal lapped joints of metal panels, using sealant or tape as recommend by manufacturer on side laps of nesting-type panels; and elsewhere as needed to make panels watertight.

2. Provide sealant or tape between panels and protruding equipment, vents, and accessories.
3. At panel splices, nest panels with minimum 6-inch (152-mm) end lap, sealed with sealant and fastened together by interlocking clamping plates.

C. Accessory Installation: Install accessories with positive anchorage to building and weathertight mounting and provide for thermal expansion. Coordinate installation with flashings and other components.

D. Flashing and Trim: Comply with performance requirements, manufacturer's written installation instructions, and SMACNA's "Architectural Sheet Metal Manual." Provide concealed fasteners where possible and set units true to line and level as indicated. Install work with laps, joints, and seams that are permanently watertight.

3.3 CLEANING

A. Remove temporary protective coverings and strippable films, if any, as metal panels are installed, unless otherwise indicated in manufacturer's written installation instructions. On completion of metal panel installation, clean finished surfaces as recommended by metal panel manufacturer. Maintain in a clean condition during construction.

END OF SECTION 074213

This page intentionally left blank.

SECTION 076200 - SHEET METAL FLASHING AND TRIM

PART 1 - GENERAL

1.1 RELATED DOCUMENTS

A. Drawings and general provisions of the Contract, including General and Supplementary Conditions and Division 01 Specification Sections, apply to this Section.

1.2 SUMMARY

A. Section Includes:

1. Manufactured reglets with counterflashing.
2. Formed wall sheet metal fabrications.

B. Related Requirements:

1. Section 061053 "Miscellaneous Rough Carpentry" for wood nailers, curbs, and blocking.
2. Section 074213, for Aluminum composite panels of sheet metal flashing and trim integral with wall cladding.

1.3 COORDINATION

A. Coordinate sheet metal flashing and trim layout and seams with sizes and locations of penetrations to be flashed, and joints and seams in adjacent materials.

B. Coordinate sheet metal flashing and trim installation with adjoining roofing and wall materials, joints, and seams to provide leakproof, secure, and noncorrosive installation.

1.4 PREINSTALLATION MEETINGS

A. Preinstallation Conference: Conduct conference at Project site.

1. Review construction schedule. Verify availability of materials, Installer's personnel, equipment, and facilities needed to make progress and avoid delays.
2. Review special roof details, roof drainage, roof-penetration flashing, equipment curbs, and condition of other construction that affect sheet metal flashing and trim.
3. Review requirements for insurance and certificates if applicable.
4. Review sheet metal flashing observation and repair procedures after flashing installation.

1.5 ACTION SUBMITTALS

A. Product Data: For each of the following

1. Underlayment materials.
2. Elastomeric sealant.
3. Butyl sealant.

4. Epoxy seam sealer.

B. Shop Drawings: For sheet metal flashing and trim.

1. Include plans, elevations, sections, and attachment details.
2. Detail fabrication and installation layouts, expansion-joint locations, and keyed details. Distinguish between shop- and field-assembled Work.
3. Include identification of material, thickness, weight, and finish for each item and location in Project.
4. Include details for forming, including profiles, shapes, seams, and dimensions.
5. Include details for joining, supporting, and securing, including layout and spacing of fasteners, cleats, clips, and other attachments. Include pattern of seams.
6. Include details of termination points and assemblies.
7. Include details of expansion joints and expansion-joint covers, including showing direction of expansion and contraction from fixed points.
8. Include details of roof-penetration flashing.
9. Include details of edge conditions, including eaves, ridges, valleys, rakes, crickets, flashings, and counterflashings.
10. Include details of special conditions.
11. Include details of connections to adjoining work.
12. Detail formed flashing and trim at scale of not less than 1-1/2 inches per 12 inches.

1.6 INFORMATIONAL SUBMITTALS

A. Qualification Data: For fabricator.

B. Product Certificates: For each type of coping and roof edge flashing that is ANSI/SPRI/FM 4435/ES-1 tested.

C. Product Test Reports: For each product, for tests performed by a qualified testing agency.

D. Evaluation Reports: For copings and roof edge flashing, from ICC-ES showing compliance with ANSI/SPRI/FM 4435/ES-1.

E. Sample Warranty: For special warranty.

1.7 QUALITY ASSURANCE

A. Fabricator Qualifications: Employs skilled workers who custom fabricate sheet metal flashing and trim similar to that required for this Project and whose products have a record of successful in-service performance.

1. For copings and roof edge flashings that are ANSI/SPRI/FM 4435/ES-1 tested, shop shall be listed as able to fabricate required details as tested and approved.

B. Mockups: Build mockups to verify selections made under Sample submittals, to demonstrate aesthetic effects, and to set quality standards for fabrication and installation.

1. Build mockup of typical roof edge and eave, including metal gutter, fascia trim, approximately 10 feet (3.0 m) long, including supporting construction cleats, seams, attachments, underlayment, and accessories.
2. Approval of mockups does not constitute approval of deviations from the Contract Documents contained in mockups unless Owner specifically approves such deviations in writing.
3. Subject to compliance with requirements, approved mockups may become part of the completed Work if undisturbed at time of Substantial Completion.

1.8 DELIVERY, STORAGE, AND HANDLING

A. Do not store sheet metal flashing and trim materials in contact with other materials that might cause staining, denting, or other surface damage.

1. Store sheet metal flashing and trim materials away from uncured concrete and masonry.
2. Protect stored sheet metal flashing and trim from contact with water.

B. Protect strippable protective covering on sheet metal flashing and trim from exposure to sunlight and high humidity, except to extent necessary for period of sheet metal flashing and trim installation.

1.9 WARRANTY

A. Special Warranty on Finishes: Manufacturer agrees to repair finish or replace sheet metal flashing and trim that shows evidence of deterioration of factory-applied finishes within specified warranty period.

1. Exposed Panel Finish: Deterioration includes, but is not limited to, the following:

a. Color fading more than 5 Delta units when tested in accordance with ASTM D2244.
b. Chalking in excess of a No. 8 rating when tested in accordance with ASTM D4214.
c. Cracking, checking, peeling, or failure of paint to adhere to bare metal.

2. Finish Warranty Period: 20 years from date of Substantial Completion.

PART 2 - PRODUCTS

2.1 PERFORMANCE REQUIREMENTS

A. General: Sheet metal flashing and trim assemblies, including cleats, anchors, and fasteners, shall withstand wind loads, structural movement, thermally induced movement, and exposure to weather without failure due to defective manufacture, fabrication, installation, or other defects in construction. Completed sheet metal flashing and trim shall not rattle, leak, or loosen, and shall remain watertight.

B. Sheet Metal Standard for Flashing and Trim: Comply with SMACNA's "Architectural Sheet Metal Manual" requirements for dimensions and profiles shown unless more stringent requirements are indicated.

C. SPRI Wind Design Standard: Manufacture and install copings and roof edge flashings tested in accordance with ANSI/SPRI/FM 4435/ES-1 and capable of resisting the following design pressure:

1. Design Pressure: As indicated on Drawings.

D. Thermal Movements: Allow for thermal movements from ambient and surface temperature changes to prevent buckling, opening of joints, overstressing of components, failure of joint sealants, failure of connections, and other detrimental effects. Base calculations on surface temperatures of materials due to both solar heat gain and nighttime-sky heat loss.

1. Temperature Change: 120 deg F (67 deg C), ambient; 180 deg F (100 deg C), material surfaces.

2.2 SHEET METALS

A. General: Protect mechanical and other finishes on exposed surfaces from damage by applying strippable, temporary protective film before shipping.

B. Aluminum Sheet: ASTM B209 (ASTM B209M), alloy as standard with manufacturer for finish required, with temper as required to suit forming operations and performance required; with smooth, flat surface.

1. As-Milled Finish: [Mill] [One-side bright mill] [Standard one-side bright] [Standard two-side bright].
2. Alclad Finish: Metallurgically bonded surfacing alloy on both sides, forming aluminum sheet with reflective luster.
3. Factory Prime Coating: Where painting after installation is required, pretreat metal with white or light-colored, factory-applied, baked-on epoxy primer coat; minimum dry film thickness of 0.2 mil (0.005 mm).

2.3 UNDERLAYMENT MATERIALS

A. Felt: ASTM D226/D226M, Type II (No. 30), asphalt-saturated organic felt; nonperforated.

B. Self-Adhering, High-Temperature Sheet Underlayment: Minimum 30 mils (0.76 mm) thick, consisting of a slip-resistant polyethylene- or polypropylene-film top surface laminated to a layer of butyl- or SBS-modified asphalt adhesive, with release-paper backing; specifically designed to withstand high metal temperatures beneath metal roofing. Provide primer in accordance with underlayment manufacturer's written instructions.

C. Slip Sheet: Rosin-sized building paper, 3 lb/100 sq. ft. (0.16 kg/sq. m) minimum.

2.4 MISCELLANEOUS MATERIALS

A. General: Provide materials and types of fasteners, protective coatings, sealants, and other miscellaneous items as required for complete sheet metal flashing and trim installation and as recommended by manufacturer of primary sheet metal unless otherwise indicated.

B. Fasteners: Wood screws, annular threaded nails, self-tapping screws, self-locking rivets and bolts, and other suitable fasteners designed to withstand design loads and recommended by manufacturer of primary sheet metal.

1. General: Blind fasteners or self-drilling screws, gasketed, with hex-washer head.

    a. Exposed Fasteners: Heads matching color of sheet metal using plastic caps or factory-applied coating. Provide metal-backed EPDM or PVC sealing washers under heads of exposed fasteners bearing on weather side of metal.

2. Fasteners for Aluminum Sheet: Aluminum or Series 300 stainless steel.

C. Sealant Tape: Pressure-sensitive, 100 percent solids, polyisobutylene compound sealant tape with release-paper backing. Provide permanently elastic, nonsag, nontoxic, nonstaining tape 1/2 inch (13 mm) wide and 1/8 inch (3 mm) thick.

D. Butyl Sealant: ASTM C1311, single-component, solvent-release butyl rubber sealant; polyisobutylene plasticized; heavy bodied for hooked-type expansion joints with limited movement.

2.5 FABRICATION, GENERAL

A. Custom fabricate sheet metal flashing and trim to comply with details indicated and recommendations in cited sheet metal standard that apply to design, dimensions, geometry, metal thickness, and other characteristics of item required.

1. Fabricate sheet metal flashing and trim in shop to greatest extent possible.
2. Fabricate sheet metal flashing and trim in thickness or weight needed to comply with performance requirements, but not less than that specified for each application and metal.
3. Verify shapes and dimensions of surfaces to be covered and obtain field measurements for accurate fit before shop fabrication.
4. Form sheet metal flashing and trim to fit substrates without excessive oil-canning, buckling, and tool marks; true to line, levels, and slopes; and with exposed edges folded back to form hems.
5. Conceal fasteners and expansion provisions where possible. Do not use exposed fasteners on faces exposed to view.

B. Fabrication Tolerances:

1. Fabricate sheet metal flashing and trim that is capable of installation to a tolerance of 1/4 inch in 20 feet (6 mm in 6 m) on slope and location lines

indicated on Drawings and within 1/8-inch (3-mm) offset of adjoining faces and of alignment of matching profiles.

2. Fabricate sheet metal flashing and trim that is capable of installation to tolerances specified.

C. Expansion Provisions: Form metal for thermal expansion of exposed flashing and trim.

1. Form expansion joints of intermeshing hooked flanges, not less than 1 inch (25 mm) deep, filled with butyl sealant concealed within joints.
2. Use lapped expansion joints only where indicated on Drawings.

D. Sealant Joints: Where movable, nonexpansion-type joints are required, form metal in accordance with cited sheet metal standard to provide for proper installation of elastomeric sealant.

E. Fabricate cleats and attachment devices from same material as accessory being anchored or from compatible, noncorrosive metal.

F. Fabricate cleats and attachment devices of sizes as recommended by cited sheet metal standard for application, but not less than thickness of metal being secured.

G. Seams:

1. Fabricate nonmoving seams with flat-lock seams. Tin edges to be seamed, form seams, and solder.
2. Fabricate nonmoving seams with flat-lock seams. Form seams and seal with elastomeric sealant unless otherwise recommended by sealant manufacturer for intended use.
3. Seams for Aluminum: Fabricate nonmoving seams with flat-lock seams. Form seams and seal with epoxy seam sealer.

H. Do not use graphite pencils to mark metal surfaces.

2.6 WALL SHEET METAL FABRICATIONS

A. Through-Wall Flashing: Fabricate continuous flashings in minimum 96-inch- (2400-mm-) long, but not exceeding 12-foot- (3.6-m-) long, sections, under copings, and at shelf angles. Fabricate discontinuous lintel, sill, and similar flashings to extend 6 inches (150 mm) beyond each side of wall openings; and form with 2-inch- (50-mm-) high, end dams. Fabricate from the following materials:

1. Stainless Steel: 0.016 inch (0.40 mm) thick.

B. Opening Flashings in Frame Construction: Fabricate head, sill, jamb, and similar flashings to extend 4 inches (100 mm) beyond wall openings. Form head and sill flashing with 2-inch- (50-mm-) high, end dams. Fabricate from the following materials:

1. Aluminum: 0.032 inch (0.81 mm) thick.

PART 3 - EXECUTION

3.1 EXAMINATION

A. Examine substrates, areas, and conditions, with installer present, for compliance with requirements for installation tolerances, substrate, and other conditions affecting performance of the Work.

1. Verify compliance with requirements for installation tolerances of substrates.
2. Verify that substrate is sound, dry, smooth, clean, sloped for drainage, and securely anchored.
3. Verify that air- or water-resistant barriers have been installed over sheathing or backing substrate to prevent air infiltration or water penetration.

B. Proceed with installation only after unsatisfactory conditions have been corrected.

3.2 INSTALLATION, GENERAL

A. Install sheet metal flashing and trim to comply with details indicated and recommendations of cited sheet metal standard that apply to installation characteristics required unless otherwise indicated on Drawings.

1. Install fasteners, solder, protective coatings, separators, sealants, and other miscellaneous items as required to complete sheet metal flashing and trim system.
2. Install sheet metal flashing and trim true to line, levels, and slopes. Provide uniform, neat seams with minimum exposure of sealant.
3. Anchor sheet metal flashing and trim and other components of the Work securely in place, with provisions for thermal and structural movement.
4. Install sheet metal flashing and trim to fit substrates and to result in watertight performance.
5. Install continuous cleats with fasteners spaced not more than 12 inches (300 mm) o.c.
6. Space individual cleats not more than 12 inches (300 mm) apart. Attach each cleat with at least two fasteners. Bend tabs over fasteners.
7. Install exposed sheet metal flashing and trim with limited oil-canning, and free of buckling and tool marks.
8. Do not field cut sheet metal flashing and trim by torch.
9. Do not use graphite pencils to mark metal surfaces.

B. Metal Protection: Where dissimilar metals contact each other, or where metal contacts pressure-treated wood or other corrosive substrates, protect against galvanic action or corrosion by painting contact surfaces with bituminous coating or by other permanent separation as recommended by sheet metal manufacturer or cited sheet metal standard.

1. Coat concealed side of uncoated-aluminum sheet metal flashing and trim with bituminous coating where flashing and trim contact wood, ferrous metal, or cementitious construction.
2. Underlayment: Where installing sheet metal flashing and trim directly on cementitious or wood substrates, install underlayment and cover with slip sheet.

C. Expansion Provisions: Provide for thermal expansion of exposed flashing and trim.

1. Space movement joints at maximum of 10 feet (3 m)] with no joints within 24 inches (600 mm) of corner or intersection.
2. Form expansion joints of intermeshing hooked flanges, not less than 1 inch (25 mm) deep, filled with sealant concealed within joints.
3. Use lapped expansion joints only where indicated on Drawings.

D. Fasteners: Use fastener sizes that penetrate wood blocking or sheathing not less than 1-1/4 inches (32 mm) for nails and not less than 3/4 inch (19 mm) for wood screws] [substrate not less than recommended by fastener manufacturer to achieve maximum pull-out resistance.

E. Conceal fasteners and expansion provisions where possible in exposed work and locate to minimize possibility of leakage. Cover and seal fasteners and anchors as required for a tight installation.

F. Seal joints as required for watertight construction.

1. Use sealant-filled joints unless otherwise indicated.

a. Embed hooked flanges of joint members not less than 1 inch (25 mm) into sealant.
b. Form joints to completely conceal sealant.
c. When ambient temperature at time of installation is between 40 and 70 deg F (4 and 21 deg C), set joint members for 50 percent movement each way.
d. Adjust setting proportionately for installation at higher ambient temperatures.

1) Do not install sealant-type joints at temperatures below 40 deg F (4 deg C).

2. Prepare joints and apply sealants to comply with requirements in Section 079200 "Joint Sealants."

3.3 INSTALLATION OF WALL FLASHINGS

A. Install sheet metal wall flashing to intercept and exclude penetrating moisture in accordance with cited sheet metal standard unless otherwise indicated. Coordinate installation of wall flashing with installation of wall-opening components such as windows, doors, and louvers.

B. Opening Flashings in Frame Construction: Install continuous head, sill, jamb, and similar flashings to extend 4 inches (100 mm) beyond wall openings.

C. Reglets: Installation of reglets is specified in Section 042000 "Unit Masonry."

3.4 INSTALLATION OF MISCELLANEOUS FLASHING

A. Overhead-Piping Safety Pans:

1. Suspend pans from structure above, independent of other overhead items such as equipment, piping, and conduit, unless otherwise indicated on Drawings.
2. Pipe and install drain line to plumbing waste or drainage system.

3.5 INSTALLATION TOLERANCES

A. Installation Tolerances: Shim and align sheet metal flashing and trim within installed tolerance of 1/4 inch in 20 feet (6 mm in 6 m) on slope and location lines indicated on Drawings and within 1/8-inch (3-mm) offset of adjoining faces and of alignment of matching profiles.

3.6 CLEANING

A. Clean exposed metal surfaces of substances that interfere with uniform oxidation and weathering.

B. Clean and neutralize flux materials. Clean off excess solder.

C. Clean off excess sealants.

3.7 PROTECTION

A. Remove temporary protective coverings and strippable films as sheet metal flashing and trim are installed unless otherwise indicated in manufacturer's written installation instructions.

B. On completion of sheet metal flashing and trim installation, remove unused materials and clean finished surfaces as recommended in writing by sheet metal flashing and trim manufacturer.

C. Maintain sheet metal flashing and trim in clean condition during construction.

D. Replace sheet metal flashing and trim that have been damaged or that have deteriorated beyond successful repair by finish touchup or similar minor repair procedures, as determined by Architect.

END OF SECTION 076200

This page intentionally left blank.

SECTION 078413 - PENETRATION AND JOINT FIRESTOPPING

PART 1 - GENERAL

1.1 RELATED DOCUMENTS

A. Drawings and general provisions of the Contract, including General and Supplementary Conditions and Division 01 Specification Sections, apply to this Section.

1.2 SUMMARY

A. Section Includes:

1. Penetrations in fire-resistance-rated walls.
2. Joints in or between fire-resistance-rated constructions.

1.3 ACTION SUBMITTALS

A. Product Data: For each type of product.

B. Product Schedule: For each penetration firestopping system. Include location, illustration of firestopping system, and design designation of qualified testing and inspecting agency.

1. Engineering Judgments: Where Project conditions require modification to a qualified testing and inspecting agency's illustration for a particular penetration firestopping system, submit illustration, with modifications marked, approved by penetration firestopping system manufacturer's fire-protection engineer as an engineering judgment or equivalent fire-resistance-rated assembly. Obtain approval of authorities having jurisdiction prior to submittal.

1.4 INFORMATIONAL SUBMITTALS

A. Qualification Data: For Installer.

B. Product Test Reports: For each penetration firestopping system, for tests performed by a qualified testing agency.

1.5 CLOSEOUT SUBMITTALS

A. Installer Certificates: From Installer indicating that penetration firestopping systems have been installed in compliance with requirements and manufacturer's written instructions.

1.6 QUALITY ASSURANCE

A. Installer Qualifications: A firm that has been approved by FM Approval according to FM Approval 4991, "Approval Standard for Firestop Contractors," or been evaluated by UL and found to comply with its "Qualified Firestop Contractor Program Requirements."

1.7 PROJECT CONDITIONS

A. Environmental Limitations: Do not install penetration firestopping system when ambient or substrate temperatures are outside limits permitted by penetration firestopping system manufacturers or when substrates are wet because of rain, frost, condensation, or other causes.

B. Install and cure penetration firestopping materials per manufacturer's written instructions using natural means of ventilations or, where this is inadequate, forced-air circulation.

1.8 COORDINATION

A. Coordinate construction of openings and penetrating items to ensure that penetration firestopping systems can be installed according to specified firestopping system design.

B. Coordinate sizing of sleeves, openings, core-drilled holes, or cut openings to accommodate penetration firestopping systems.

PART 2 - PRODUCTS

2.1 PERFORMANCE REQUIREMENTS

A. Fire-Test-Response Characteristics:

1. Perform penetration firestopping system tests by a qualified testing agency acceptable to authorities having jurisdiction.
2. Test per testing standards referenced in "Penetration Firestopping Systems" Article. Provide rated systems complying with the following requirements:

    a. Penetration firestopping systems shall bear classification marking of a qualified testing agency.

        1) UL in its "Fire Resistance Directory."
        2) Intertek Group in its "Directory of Listed Building Products."
        3) FM Approval in its "Approval Guide."

2.2 PENETRATION FIRESTOPPING SYSTEMS

A. Penetration Firestopping Systems: Systems that resist spread of fire, passage of smoke and other gases, and maintain original fire-resistance rating of construction penetrated. Penetration firestopping systems shall be compatible with one another, with the substrates forming openings, and with penetrating items if any.

1. Manufacturers: Subject to compliance with requirements, available manufacturers offering products that may be incorporated into the Work include, but are not limited to the following:

    a. 3M Fire Protection Products.
    b. Grabber Construction Products.
    c. Hilti, Inc.
    d. STC Sound Control.

e. Tremco, Inc.

B. Penetrations in Fire-Resistance-Rated Walls: Penetration firestopping systems with ratings determined per ASTM E814 or UL 1479, based on testing at a positive pressure differential of 0.01-inch wg (2.49 Pa).

1. F-Rating: Not less than the fire-resistance rating of constructions penetrated.

C. Exposed Penetration Firestopping Systems: Flame-spread and smoke-developed indexes of less than 25 and 450, respectively, per ASTM E84.

D. Accessories: Provide components for each penetration firestopping system that are needed to install fill materials and to maintain ratings required. Use only those components specified by penetration firestopping system manufacturer and approved by qualified testing and inspecting agency for conditions indicated.

1. Permanent forming/damming/backing materials.
2. Substrate primers.
3. Collars.
4. Steel sleeves.

2.3 JOINT FIRESTOPPING SYSTEMS

A. Joint Firestopping Systems: Systems that resist spread of fire, passage of smoke and other gases, and maintain original fire-resistance rating of assemblies in or between which joint firestopping systems are installed. Joint firestopping systems shall accommodate building movements without impairing their ability to resist the passage of fire and hot gases.

B. Joints in or between Fire-Resistance-Rated Construction: Provide joint firestopping systems with ratings determined per ASTM E1966 or UL 2079.

1. Manufacturers: Subject to compliance with requirements, available manufacturers offering products that may be incorporated into the Work include, but are not limited to the following:

a. 3M Fire Protection Products.
b. ClarkDietrich.
c. Hilti, Inc.
d. Nelson Firestop; a brand of Emerson Industrial Automation.
e. Rockwool International.
f. Thermafiber, Inc.; an Owens Corning company.
g. Tremco, Inc.

2. Fire-Resistance Rating: Equal to or exceeding the fire-resistance rating of the wall, floor, or roof in or between which it is installed.

C. Exposed Joint Firestopping Systems: Flame-spread and smoke-developed indexes of less than 25 and 450, respectively, as determined per ASTM E84.

D. Accessories: Provide components of joint firestopping systems, including primers and forming materials, that are needed to install elastomeric fill materials and to maintain ratings required. Use only components specified by joint firestopping system manufacturer and approved by the qualified testing agency for conditions indicated.

2.4 FILL MATERIALS

A. Cast-in-Place Firestop Devices: Factory-assembled devices for use in cast-in-place concrete floors and consisting of an outer sleeve lined with an intumescent strip, a flange attached to one end of the sleeve for fastening to concrete formwork, and a neoprene gasket.

B. Latex Sealants: Single-component latex formulations that do not re-emulsify after cure during exposure to moisture.

C. Firestop Devices: Factory-assembled collars formed from galvanized steel and lined with intumescent material sized to fit specific diameter of penetrant.

D. Intumescent Composite Sheets: Rigid panels consisting of aluminum-foil-faced intumescent elastomeric sheet bonded to galvanized-steel sheet.

E. Intumescent Putties: Nonhardening, water-resistant, intumescent putties containing no solvents or inorganic fibers.

F. Intumescent Wrap Strips: Single-component intumescent elastomeric sheets with aluminum foil on one side.

G. Mortars: Prepackaged dry mixes consisting of a blend of inorganic binders, hydraulic cement, fillers and lightweight aggregate formulated for mixing with water at Project site to form a nonshrinking, homogeneous mortar.

H. Pillows/Bags: Reusable heat-expanding pillows/bags consisting of glass-fiber cloth cases filled with a combination of mineral-fiber, water-insoluble expansion agents, and fire-retardant additives. Where exposed, cover openings with steel-reinforcing wire mesh to protect pillows/bags from being easily removed.

I. Silicone Foams: Multicomponent, silicone-based liquid elastomers that, when mixed, expand and cure in place to produce a flexible, nonshrinking foam.

J. Silicone Sealants: Single-component, silicone-based, neutral-curing elastomeric sealants.

2.5 MIXING

A. Penetration Firestopping Materials: For those products requiring mixing before application, comply with penetration firestopping system manufacturer's written instructions for accurate proportioning of materials, water (if required), type of mixing equipment, selection of mixer speeds, mixing containers, mixing time, and other items or procedures needed to produce products of uniform quality with optimum performance characteristics for application indicated.

PART 3 - EXECUTION

3.1 EXAMINATION

A. Examine substrates and conditions, with Installer present, for compliance with requirements for opening configurations, penetrating items, substrates, and other conditions affecting performance of the Work.

B. Proceed with installation only after unsatisfactory conditions have been corrected.

3.2 PREPARATION

A. Surface Cleaning: Before installing penetration firestopping systems, clean out openings immediately to comply with manufacturer's written instructions and with the following requirements:

1. Remove from surfaces of opening substrates and from penetrating items foreign materials that could interfere with adhesion of penetration firestopping materials.
2. Clean opening substrates and penetrating items to produce clean, sound surfaces capable of developing optimum bond with penetration firestopping materials. Remove loose particles remaining from cleaning operation.
3. Remove laitance and form-release agents from concrete.

B. Prime substrates where recommended in writing by manufacturer using that manufacturer's recommended products and methods. Confine primers to areas of bond; do not allow spillage and migration onto exposed surfaces.

3.3 INSTALLATION

A. General: Install penetration and joint firestopping systems to comply with manufacturer's written installation instructions and published drawings for products and applications.

B. Install forming materials and other accessories of types required to support fill materials during their application and in the position needed to produce cross-sectional shapes and depths required to achieve fire ratings.

1. After installing fill materials and allowing them to fully cure, remove combustible forming materials and other accessories not forming permanent components of firestopping.

C. Install fill materials by proven techniques to produce the following results:

1. Fill voids and cavities formed by openings, forming materials, accessories and penetrating items to achieve required fire-resistance ratings.
2. Apply materials so they contact and adhere to substrates formed by openings and penetrating items.
3. For fill materials that will remain exposed after completing the Work, finish to produce smooth, uniform surfaces that are flush with adjoining finishes.

3.4 IDENTIFICATION

A. Wall Identification: Permanently label walls containing penetration firestopping systems with the words "FIRE AND/OR SMOKE BARRIER - PROTECT ALL OPENINGS," using lettering not less than 3 inches (76 mm) high and with minimum 0.375-inch (9.5-mm) strokes.

1. Locate in accessible concealed floor, floor-ceiling, or attic space at 15 feet (4.57 m) from end of wall and at intervals not exceeding 30 feet (9.14 m).

B. Penetration Identification: Identify each penetration firestopping system with legible metal or plastic labels. Attach labels permanently to surfaces adjacent to and within 6 inches (150 mm) of penetration firestopping system edge so labels are visible to anyone seeking to remove penetrating items or firestopping systems. Use mechanical fasteners or self-adhering-type labels with adhesives capable of permanently bonding labels to surfaces on which labels are placed. Include the following information on labels:

1. The words "Warning - Penetration Firestopping - Do Not Disturb. Notify Building Management of Any Damage."
2. Contractor's name, address, and phone number.
3. Designation of applicable testing and inspecting agency.
4. Date of installation.
5. Manufacturer's name.
6. Installer's name.

C. Joint Identification: Identify joint firestopping systems with legible metal or plastic labels. Attach labels permanently to surfaces adjacent to and within 6 inches (150 mm) of joint edge so labels are visible to anyone seeking to remove or joint firestopping system. Use mechanical fasteners or self-adhering-type labels with adhesives capable of permanently bonding labels to surfaces on which labels are placed. Include the following information on labels:

1. The words "Warning - Joint Firestopping - Do Not Disturb. Notify Building Management of Any Damage."
2. Contractor's name, address, and phone number.
3. Designation of applicable testing agency.
4. Date of installation.
5. Manufacturer's name.
6. Installer's name.

3.5 FIELD QUALITY CONTROL

A. Where deficiencies are found or penetration firestopping system is damaged or removed because of testing, repair or replace penetration firestopping system to comply with requirements.

B. Proceed with enclosing penetration firestopping systems with other construction only after inspection reports are issued and installations comply with requirements.

3.6 CLEANING AND PROTECTION

A. Clean off excess fill materials adjacent to openings as the Work progresses by methods and with cleaning materials that are approved in writing by penetration firestopping system manufacturers and that do not damage materials in which openings occur.

B. Provide final protection and maintain conditions during and after installation that ensure that penetration firestopping systems are without damage or deterioration at time of Substantial Completion. If, despite such protection, damage or deterioration occurs, immediately cut out and remove damaged or deteriorated penetration firestopping material and install new materials to produce systems complying with specified requirements.

END OF SECTION 078413

This page intentionally left blank.

SECTION 079200 - JOINT SEALANTS

PART 1 - GENERAL

1.1 SUMMARY

A. Section Includes:

1. Silicone joint sealants.
2. Urethane joint sealants.

1.2 PREINSTALLATION MEETINGS

A. Preinstallation Conference: Conduct conference at Project site.

1.3 ACTION SUBMITTALS

A. Product Data: For each joint-sealant product.

B. Samples: For each kind and color of joint sealant required.

C. Joint-Sealant Schedule: Include the following information:

1. Joint-sealant application, joint location, and designation.
2. Joint-sealant manufacturer and product name.
3. Joint-sealant formulation.
4. Joint-sealant color.

1.4 PRECONSTRUCTION TESTING

A. Preconstruction Field-Adhesion Testing: Before installing sealants, field test their adhesion to Project joint substrates. Test joint sealants according to Method A, Field-Applied Sealant Joint Hand Pull Tab, in Appendix X1.1 in ASTM C1193 or Method A, Tail Procedure, in ASTM C1521.

1.5 WARRANTY

A. Special Installer's Warranty: Installer agrees to repair or replace joint sealants that do not comply with performance and other requirements specified in this Section within specified warranty period.

1. Warranty Period: Two years from date of Substantial Completion.

B. Special Manufacturer's Warranty: Manufacturer agrees to furnish joint sealants to repair or replace those joint sealants that do not comply with performance and other requirements specified in this Section within specified warranty period.

1. Warranty Period: Five years from date of Substantial Completion.

PART 2 - PRODUCTS

2.1 JOINT SEALANTS, GENERAL

A. Colors of Exposed Joint Sealants: As selected by Architect from manufacturer's full range.

2.2 SILICONE JOINT SEALANTS

A. Silicone, S, NS, 35, NT: Single-component, nonsag, plus 35 percent and minus 35 percent movement capability. nontraffic-use, neutral-curing silicone joint sealant; ASTM C920, Type S, Grade NS, Class 35, Use NT.

1. Manufacturers: Subject to compliance with requirements, available manufacturers offering products that may be incorporated into the Work include, but are not limited to the following:

    a. Dow Corning Corporation. Contractors Weatherproofing Sealant.
    b. GE Construction Sealants; Momentive Performance Materials Inc.

B. Silicone, S, NS, 50, NT: Single-component, nonsag, plus 50 percent and minus 50 percent movement capability, traffic- and nontraffic-use, neutral-curing silicone joint sealant; ASTM C920, Type S, Grade NS, Class 50, Use NT.

1. Manufacturers: Subject to compliance with requirements, available manufacturers offering products that may be incorporated into the Work include, but are not limited to the following:

    a. Dow Corning Corporation. – 995 Silicone Structural Glazing Sealant
    b. Soudal USA.

2.3 URETHANE JOINT SEALANTS

A. Urethane, S, NS, 25, NT: Single-component, nonsag, nontraffic-use, plus 25 percent and minus 25 percent movement capability, urethane joint sealant; ASTM C920, Type S, Grade NS, Class 25, Use NT.

1. Manufacturers: Subject to compliance with requirements, available manufacturers offering products that may be incorporated into the Work include, but are not limited to the following:

    a. BASF Corporation.
    b. Bostik, Inc.
    c. ER Systems; an ITW Company.
    d. Everkem Diversified Products, Inc.
    e. Pecora Corporation.
    f. Polymeric Systems, Inc.
    g. Schnee-Morehead, Inc., an ITW company.
    h. Sherwin-Williams Company (The).
    i. Sika Corporation; Joint Sealants.
    j. Tremco Incorporated.

B. Urethane, S, NS, 100/50, T, NT: Single-component, nonsag, plus 100 percent and minus 50 percent movement capability, traffic- and nontraffic-use, urethane joint sealant; ASTM C920, Type S, Grade NS, Class 100/50, Uses T and NT.

1. Manufacturers: Subject to compliance with requirements, available manufacturers offering products that may be incorporated into the Work include, but are not limited to the following:

a. Sika Corporation; Joint Sealants.

C. Urethane, S, NS, 25, T, NT: Single-component, nonsag, plus 25 percent and minus 25 percent movement capability, traffic- and nontraffic-use, urethane joint sealant; ASTM C920, Type S, Grade NS, Class 25, Uses T and NT.

1. Manufacturers: Subject to compliance with requirements, available manufacturers offering products that may be incorporated into the Work include, but are not limited to the following:

D. Urethane, S, P, 35, T, NT: Single-component, pourable, plus 35 percent and minus 35 percent movement capability, traffic- and nontraffic-use, urethane joint sealant; ASTM C920, Type S, Grade P, Class 35, Uses T and NT.

1. Manufacturers: Subject to compliance with requirements, available manufacturers offering products that may be incorporated into the Work include, but are not limited to the following:

a. Bostik, Inc.
b. Tremco - Vulkem

2.4 JOINT-SEALANT BACKING

A. Cylindrical Sealant Backings: ASTM C1330, Type C (closed-cell material with a surface skin) Type O (open-cell material) Type B (bicellular material with a surface skin) or any of the preceding types, as approved in writing by joint-sealant manufacturer for joint application indicated, and of size and density to control sealant depth and otherwise contribute to producing optimum sealant performance.

1. Manufacturers: Subject to compliance with requirements, available manufacturers offering products that may be incorporated into the Work include, but are not limited to the following:

a. Adfast.
b. Alcot Plastics Ltd.
c. BASF Corporation.
d. Construction Foam Products; a division of Nomaco, Inc.

B. Bond-Breaker Tape: Polyethylene tape or other plastic tape recommended by sealant manufacturer.

2.5 MISCELLANEOUS MATERIALS

A. Primer: Material recommended by joint-sealant manufacturer where required for adhesion of sealant to joint substrates indicated, as determined from preconstruction joint-sealant-substrate tests and field tests.

B. Cleaners for Nonporous Surfaces: Chemical cleaners acceptable to manufacturers of sealants and sealant backing materials.

C. Masking Tape: Nonstaining, nonabsorbent material compatible with joint sealants and surfaces adjacent to joints.

PART 3 - EXECUTION

3.1 PREPARATION

A. Surface Cleaning of Joints: Clean out joints immediately before installing joint sealants to comply with joint-sealant manufacturer's written instructions and the following requirements:

1. Remove laitance and form-release agents from concrete.
2. Clean nonporous joint substrate surfaces with chemical cleaners or other means that do not stain, harm substrates, or leave residues capable of interfering with adhesion.

B. Joint Priming: Prime joint substrates where recommended by joint-sealant manufacturer or as indicated by preconstruction joint-sealant-substrate tests or prior experience.

C. Masking Tape: Use masking tape where required to prevent contact of sealant or primer with adjoining surfaces.

3.2 INSTALLATION OF JOINT SEALANTS

A. General: Comply with ASTM C1193 and joint-sealant manufacturer's written installation instructions for products and applications indicated, unless more stringent requirements apply.

B. Install sealant backings of kind indicated to support sealants during application and at position required to produce cross-sectional shapes and depths of installed sealants relative to joint widths that allow optimum sealant movement capability.

C. Install bond-breaker tape behind sealants where sealant backings are not used between sealants and backs of joints.

D. Install sealants using proven techniques that comply with the following and at the same time backings are installed:

1. Place sealants so they directly contact and fully wet joint substrates.
2. Completely fill recesses in each joint configuration.
3. Produce uniform, cross-sectional shapes and depths relative to joint widths that allow optimum sealant movement capability.

E. Tooling of Nonsag Sealants: Immediately after sealant application and before skinning or curing begins, tool sealants to form smooth, uniform beads of configuration indicated. Use tooling agents that are approved in writing by sealant manufacturer and that do not discolor sealants or adjacent surfaces.

1. Provide concave joint profile per Figure 8A in ASTM C1193 unless otherwise indicated.

3.3 FIELD QUALITY CONTROL

A. Field-Adhesion Testing: Field test joint-sealant adhesion to joint substrates as follows:

1. Extent of Testing: Test completed and cured sealant joints as follows:

a. Perform 5 tests for the first 500 feet of joint length for each kind of sealant and joint substrate.

2. Test Method: Test joint sealants according to Method A, Field-Applied Sealant Joint Hand Pull Tab, in Appendix X1 in ASTM C1193 or Method A, Tail Procedure, in ASTM C1521.

B. Evaluation of Field-Adhesion-Test Results: Sealants not evidencing adhesive failure from testing or noncompliance with other indicated requirements will be considered satisfactory. Remove sealants that fail to adhere to joint substrates during testing or to comply with other requirements. Retest failed applications until test results prove sealants comply with indicated requirements.

3.4 JOINT-SEALANT SCHEDULE

A. Joint-Sealant Application: Exterior joints in horizontal traffic surfaces.

1. Joint Locations:

a. Control and expansion joints in pavers.
b. Isolation and contraction joints in cast-in-place concrete slabs.
c. Tile control and expansion joints.
d. Joints between different materials listed above.
e. Other joints as indicated on Drawings.

2. Joint Sealant: Urethane, S, P, 35, T, NT.
3. Joint-Sealant Color: As selected by Architect from manufacturer's full range of colors.

B. Joint-Sealant Application: Exterior joints in horizontal traffic surfaces subject to water immersion.

1. Joint Locations:

a. Joints in pedestrian sidewalks.
b. Other joints as indicated on Drawings.

2. Joint Sealant: Urethane, immersible, S, P, 25, T, NT, I.

3. Joint-Sealant Color: As selected by Architect from manufacturer's full range of colors.

C. Joint-Sealant Application: Exterior joints in vertical surfaces and horizontal nontraffic surfaces.

1. Joint Locations:

a. Construction joints in cast-in-place concrete.
b. Joints between plant-precast architectural concrete units.
c. Control and expansion joints in unit masonry.
d. Joints in dimension stone cladding.
e. Other joints as indicated on Drawings.

2. Joint Sealant: Silicone, nonstaining, S, NS, 35, NT.
3. Joint-Sealant Color: As selected by Architect from manufacturer's full range of colors.

D. Joint-Sealant Application: Interior joints in horizontal traffic surfaces.

1. Joint Locations:

a. Isolation joints in cast-in-place concrete slabs.
b. Other joints as indicated on Drawings.

2. Joint Sealant: Urethane, S, P, 35, T, NT.
3. Joint-Sealant Color: As selected by Architect from manufacturer's full range of colors.

E. Joint-Sealant Application: Interior joints in vertical surfaces and horizontal nontraffic surfaces.

1. Joint Locations:

a. Control and expansion joints on exposed interior surfaces of exterior walls.
b. Tile control and expansion joints.
c. Vertical joints on exposed surfaces of unit masonry concrete walls and partitions.
d. Other joints as indicated on Drawings.

2. Joint Sealant: Silicone, S, NS, 35, NT.
3. Joint-Sealant Color: As selected by Architect from manufacturer's full range of colors.

END OF SECTION 079200

SECTION 081113 - HOLLOW METAL DOORS AND FRAMES

PART 1 - GENERAL

1.1 RELATED DOCUMENTS

A. Drawings and general provisions of the Contract, including General and Supplementary Conditions and Division 01 Specification Sections, apply to this Section.

1.2 SUMMARY

A. Section includes:

1. Exterior standard steel doors and frames.

1.3 ACTION SUBMITTALS

A. Product Data: For each type of product.

B. Shop Drawings: Include the following:

1. Elevations of door type.
2. Details of door, including vertical- and horizontal-edge details and metal thicknesses.
3. Frame detail for frame type, including dimensioned profiles and metal thicknesses.

C. Product Schedule: For hollow-metal door and frame, prepared by or under the supervision of supplier, using same reference numbers for details and openings as those on Drawings. Coordinate with final door hardware schedule.

PART 2 - PRODUCTS

2.1 MANUFACTURERS

A. Manufacturers: Subject to compliance with requirements, provide products by one of the following:

1. Steelcraft
2. Ceco Door; ASSA ABLOY.
3. Curries Company; ASSA ABLOY.

2.2 PERFORMANCE REQUIREMENTS

A. Fire-Rated Door Assemblies: Assemblies complying with NFPA 80 that are listed and labeled by a qualified testing agency acceptable to authorities having jurisdiction for fire-protection ratings and temperature-rise limits indicated on Drawings, based on testing at positive pressure according to NFPA 252 or UL 10C.

1. Smoke- and Draft-Control Door Assemblies: Listed and labeled for smoke and draft control by a qualified testing agency acceptable to authorities having jurisdiction, based on testing according to UL 1784 and installed in compliance with NFPA 105.

B. Thermally Rated Door Assemblies: Provide door assemblies with U-factor of not more than 0.40 deg Btu/F x h x sq. ft. when tested according to ASTM C518.

2.3 EXTERIOR STANDARD STEEL DOORS AND FRAMES

A. Construct hollow-metal doors and frames to comply with standards indicated for materials, fabrication, hardware locations, hardware reinforcement, tolerances, and clearances, and as specified.

B. Heavy-Duty Doors and Frames: ANSI/SDI A250.8, Level 2; ANSI/SDI A250.4, Level B. At locations indicated in the Door and Frame Schedule.

1. Doors:

   a. Type: As indicated in the Door and Frame Schedule.
   b. Thickness: 1-3/4 inches.
   c. Face: Metallic-coated steel sheet, minimum thickness of 0.042 inch, with minimum A60 coating.
   d. Edge Construction: Model 2, Seamless.
   e. Edge Bevel: Provide manufacturer's standard beveled or square edges.
   f. Top Edge Closures: Close top edges of doors with flush closures of same material as face sheets. Seal joints against water penetration.
   g. Bottom Edges: Close bottom edges of doors with end closures or channels of same material as face sheets. Provide weep-hole openings in bottoms of exterior doors to permit moisture to escape.
   h. Core: Manufacturer's standard.
   i. Fire-Rated Core: Manufacturer's standard core for fire-rated doors.

2. Frames:

   a. Materials: Metallic-coated steel sheet, minimum thickness of 0.053 inch, with minimum A60 coating.
   b. Construction: Face welded.

2.4 FRAME ANCHORS

A. Jamb Anchors:

1. Type: Anchors of minimum size and type required by applicable door and frame standard, and suitable for performance level indicated.
2. Quantity: Minimum of three anchors per jamb, with one additional anchor for frames with no floor anchor. Provide one additional anchor for each 24 inches of frame height above 7 feet.

B. Floor Anchors: Provide floor anchors for each jamb and mullion that extends to floor.

C. Material: ASTM A879/A879M, Commercial Steel (CS), 04Z coating designation; mill phosphatized.

1. For anchors built into exterior walls, steel sheet complying with ASTM A1008/A1008M or ASTM A1011/A1011M; hot-dip galvanized according to ASTM A153/A153M, Class B.

2.5 MATERIALS

A. Cold-Rolled Steel Sheet: ASTM A1008/A1008M, Commercial Steel (CS), Type B; suitable for exposed applications.

B. Hot-Rolled Steel Sheet: ASTM A1011/A1011M, Commercial Steel (CS), Type B; free of scale, pitting, or surface defects; pickled and oiled.

C. Metallic-Coated Steel Sheet: ASTM A653/A653M, Commercial Steel (CS), Type B.

D. Inserts, Bolts, and Fasteners: Hot-dip galvanized according to ASTM A153/A153M.

E. Power-Actuated Fasteners in Concrete: Fastener system of type suitable for application indicated, fabricated from corrosion-resistant materials, with clips or other accessory devices for attaching hollow-metal frames of type indicated.

2.6 FABRICATION

A. Hollow-Metal Frames: Fabricate in one piece except where handling and shipping limitations require multiple sections. Where frames are fabricated in sections, provide alignment plates or angles at each joint, fabricated of metal of same or greater thickness as frames.

1. Provide countersunk, flat- or oval-head exposed screws and bolts for exposed fasteners unless otherwise indicated.
2. Door Silencers: Except on weather-stripped frames, drill stops to receive door silencers as follows. Keep holes clear during construction.

    a. Single-Door Frame: Drill stop in strike jamb to receive three door silencers.

B. Hardware Preparation: Factory prepare hollow-metal doors and frames to receive templated mortised hardware, and electrical wiring; include cutouts, reinforcement, mortising, drilling, and tapping according to ANSI/SDI A250.6, the Door Hardware Schedule, and templates.

1. Reinforce doors and frames to receive nontemplated, mortised, and surface-mounted door hardware.
2. Comply with BHMA A156.115 for preparing hollow-metal doors and frames for hardware.

2.7 STEEL FINISHES

A. Prime Finish: Clean, pretreat, and apply manufacturer's standard primer.

1. Shop Primer: Manufacturer's standard, fast-curing, lead- and chromate-free primer complying with ANSI/SDI A250.10; recommended by primer manufacturer for substrate; compatible with substrate and field-applied coatings despite prolonged exposure.

PART 3 - EXECUTION

3.1 PREPARATION

A. Remove welded-in shipping spreaders installed at factory. Restore exposed finish by grinding, filling, and dressing, as required to make repaired area smooth, flush, and invisible on exposed faces. Touch up factory-applied finishes where spreaders are removed.

B. Drill and tap doors and frames to receive non-templated, mortised, and surface-mounted door hardware.

3.2 INSTALLATION

A. Hollow-Metal Frames: Comply with ANSI/SDI A250.11.

1. Set frames accurately in position; plumbed, aligned, and braced securely until permanent anchors are set. After wall construction is complete, remove temporary braces without damage to completed Work.

    a. Where frames are fabricated in sections, field splice at approved locations by welding face joint continuously; grind, fill, dress, and make splice smooth, flush, and invisible on exposed faces. Touch-up finishes.

2. Fire-Rated Openings: Install frames according to NFPA 80.
3. Floor Anchors: Secure with post-installed expansion anchors.

    a. Floor anchors may be set with power-actuated fasteners instead of post-installed expansion anchors if so indicated and approved on Shop Drawings.

4. Installation Tolerances: Adjust hollow-metal frames to the following tolerances:

    a. Squareness: Plus or minus 1/16 inch, measured at door rabbet on a line 90 degrees from jamb perpendicular to frame head.
    b. Alignment: Plus or minus 1/16 inch, measured at jambs on a horizontal line parallel to plane of wall.
    c. Twist: Plus or minus 1/16 inch, measured at opposite face corners of jambs on parallel lines, and perpendicular to plane of wall.
    d. Plumbness: Plus or minus 1/16 inch, measured at jambs at floor.

B. Hollow-Metal Doors: Fit and adjust hollow-metal doors accurately in frames, within clearances specified below.

1. Fire-Rated Doors: Install doors with clearances according to NFPA 80.
2. Smoke-Control Doors: Install doors according to NFPA 105.

3.3 REPAIR

A. Prime-Coat Touchup: Immediately after erection, sand smooth rusted or damaged areas of prime coat and apply touchup of compatible air-drying, rust-inhibitive primer.

B. Metallic-Coated Surface Touchup: Clean abraded areas and repair with galvanizing repair paint according to manufacturer's written instructions.

C. Touchup Painting: Cleaning and touchup painting of abraded areas of paint are specified in painting Sections.

END OF SECTION 081113

This page intentionally left blank.

SECTION 087100 – DOOR HARDWARE

PART 1 - GENERAL

1.1 RELATED DOCUMENTS

A. Drawings and general provisions of the Contract, including General and Supplementary Conditions and Division 01 Specification Sections, apply to this Section.

1.2 SUMMARY

A. Section includes:

1. Mechanical and electrified door hardware for:

    a. Swinging doors.

2. Field verification, preparation and modification of existing doors and frames to receive new door hardware.
3. The intent of the hardware specification is to specify the hardware for exterior doors, and to establish a type, continuity, and standard of quality. However, it is the door hardware supplier's responsibility to thoroughly review existing conditions, schedules, specifications, drawings, and other Contract Documents to verify the suitability of the hardware specified.

B. Related Sections:

1. Division 07 Section "Joint Sealants" for sealant requirements applicable to threshold installation specified in this section.
2. Division 08 Section "Hollow Metal Doors and Frames" for doors and frames applicable to threshold installation specified in this section.

1.3 REFERENCES

A. UL - Underwriters Laboratories

1. UL 10B - Fire Test of Door Assemblies
2. UL 10C - Positive Pressure Test of Fire Door Assemblies
3. UL 1784 - Air Leakage Tests of Door Assemblies
4. UL 305 - Panic Hardware

B. DHI - Door and Hardware Institute

1. Sequence and Format for the Hardware Schedule
2. Recommended Locations for Builders Hardware
3. Key Systems and Nomenclature

C. ANSI - American National Standards Institute

1. ANSI/BHMA A156.1 - A156.29, and ANSI/BHMA A156.31 - Standards for Hardware and Specialties

1.4 SUBMITTALS

A. General:

1. Submit in accordance with Conditions of Contract and Division 01 requirements.
2. Highlight, encircle, or otherwise specifically identify on submittals deviations from Contract Documents, issues of incompatibility or other issues which may detrimentally affect the Work.
3. Prior to forwarding submittal, comply with procedures for verifying existing door and frame compatibility for new hardware, as specified in PART 3, “EXAMINATION” article, herein.

B. Action Submittals:

1. Product Data: Technical product data for each item of door hardware, installation instructions, maintenance of operating parts and finish, and other information necessary to show compliance with requirements.
2. Samples for Verification: If requested by Architect, submit production sample or sample installations of each type of exposed hardware unit in finish indicated, and tagged with full description for coordination with schedule.

    a. Samples will be returned to supplier. Units that are acceptable to Architect may, after final check of operations, be incorporated into Work, within limitations of key coordination requirements.

3. Door Hardware Schedule: Submit schedule with hardware sets in vertical format as illustrated by Sequence of Format for the Hardware Schedule as published by the Door and Hardware Institute. Indicate complete designations of each item required for each door or opening, include:

    a. Door Index; include door number, heading number, and Architects hardware set number.
    b. Opening Lock Function Spreadsheet: List locking device and function for each opening.
    c. Quantity, type, style, function, size, and finish of each hardware item.
    d. Name and manufacturer of each item.
    e. Fastenings and other pertinent information.
    f. Location of each hardware set cross-referenced to indications on Drawings.
    g. Explanation of all abbreviations, symbols, and codes contained in schedule.
    h. Mounting locations for hardware.
    i. Door and frame sizes and materials.
    j. Name and phone number for local manufacturer's representative for each product.
    k. Operational Description of openings with any electrified hardware (locks, exits, electromagnetic locks, electric strikes, automatic operators, door position switches, magnetic holders or closer/holder units, and access

control components). Operational description should include operational descriptions for: egress, ingress (access), and fire/smoke alarm connections.

1) Submittal Sequence: Submit door hardware schedule concurrent with submissions of Product Data, Samples, and Shop Drawings. Coordinate submission of door hardware schedule with scheduling requirements of other work to facilitate fabrication of other work that is critical in Project construction schedule.

4. Key Schedule:

a. After Keying Conference, provide keying schedule listing levels of keying as well as explanation of key system's function, key symbols used and door numbers controlled.
b. Use ANSI/BHMA A156.28 “Recommended Practices for Keying Systems” as guideline for nomenclature, definitions, and approach for selecting optimal keying system.
c. Provide 3 copies of keying schedule for review prepared and detailed in accordance with referenced DHI publication. Include schematic keying diagram and index each key to unique door designations.
d. Index keying schedule by door number, keyset, hardware heading number, cross keying instructions, and special key stamping instructions.
e. Provide one complete bitting list of key cuts and one key system schematic illustrating system usage and expansion.

1) Forward bitting list, key cuts and key system schematic directly to Owner, by means as directed by Owner.

f. Prepare key schedule by or under supervision of supplier, detailing Owner’s final keying instructions for locks.

5. Templates: After final approval of hardware schedule, provide templates for doors, frames and other work specified to be factory or shop prepared for door hardware installation.

C. Informational Submittals:

1. Qualification Data: For Supplier, Installer and Architectural Hardware Consultant.
2. Product data for electrified door hardware:

a. Certify that door hardware approved for use on types and sizes of labeled fire-rated doors complies with listed fire-rated door assemblies.

3. Certificates of Compliance:

a. UL listings for fire-rated hardware and installation instructions if requested by Architect or Authority Having Jurisdiction.
b. Installer Training Meeting Certification: Letter of compliance, signed by Contractor, attesting to completion of installer training meeting specified in “QUALITY ASSURANCE” article, herein.

c. Electrified Hardware Coordination Conference Certification: Letter of compliance, signed by Contractor, attesting to completion of electrified hardware coordination conference, specified in “QUALITY ASSURANCE” article, herein.

4. Warranty: Special warranty specified in this Section.

D. Closeout Submittals:

1. Operations and Maintenance Data: Provide in accordance with Division 01 and include:

a. Complete information on care, maintenance, and adjustment; data on repair and replacement parts, and information on preservation of finishes.
b. Catalog pages for each product.
c. Factory order acknowledgement numbers (for warranty and service)
d. Name, address, and phone number of local representative for each manufacturer.
e. Parts list for each product.
f. Final approved hardware schedule, edited to reflect conditions as-installed.
g. Final keying schedule
h. Copies of floor plans with keying nomenclature
i. As-installed wiring diagrams for each opening connected to power, both low voltage and 110 volts.
j. Copy of warranties including appropriate reference numbers for manufacturers to identify project.

1.5 QUALITY ASSURANCE

A. Supplier Qualifications and Responsibilities: Recognized architectural hardware supplier with record of successful in-service performance for supplying door hardware similar in quantity, type, and quality to that indicated for this Project and that provides certified Architectural Hardware Consultant (AHC) available to Owner, Architect, and Contractor, at reasonable times during the Work for consultation.

1. Warehousing Facilities: In Project's vicinity.
2. Scheduling Responsibility: Preparation of door hardware and keying schedules.
3. Engineering Responsibility: Preparation of data for electrified door hardware, including Shop Drawings, based on testing and engineering analysis of manufacturer's standard units in assemblies similar to those indicated for this Project.
4. Coordination Responsibility: Assist in coordinating installation of electronic security hardware with Architect and electrical engineers and provide installation and technical data to Architect and other related subcontractors.

a. Upon completion of electronic security hardware installation, inspect and verify that all components are working properly.

B. Architectural Hardware Consultant Qualifications: Person who is experienced in providing consulting services for door hardware installations that are comparable in material, design, and extent to that indicated for this Project and meets these requirements:

1. For door hardware, DHI-certified, Architectural Hardware Consultant (AHC).
2. Can provide installation and technical data to Architect and other related subcontractors.
3. Can inspect and verify components are in working order upon completion of installation.
4. Capable of producing wiring diagrams.
5. Capable of coordinating installation of electrified hardware with Architect and electrical engineers.

C. Single Source Responsibility: Obtain each type of door hardware from single manufacturer.

D. Fire-Rated Door Openings: Provide door hardware for fire-rated openings that complies with NFPA 80 and requirements of authorities having jurisdiction. Provide only items of door hardware that are listed products tested by Underwriters Laboratories, Intertek Testing Services, or other testing and inspecting organizations acceptable to authorities having jurisdiction for use on types and sizes of doors indicated, based on testing at positive pressure and according to NFPA 252 or UL 10C and in compliance with requirements of fire-rated door and door frame labels.

E. Accessibility Requirements: For door hardware on doors in an accessible route, comply with governing accessibility regulations cited in “REFERENCES” article, herein.

F. Keying Conference

1. Incorporate keying conference decisions into final keying schedule after reviewing door hardware keying system including:

    a. Function of building, flow of traffic, purpose of each area, degree of security required, and plans for future expansion.
    b. Preliminary key system schematic diagram.
    c. Requirements for key control system.
    d. Requirements for access control.
    e. Address for delivery of keys.

G. Pre-installation Conference

1. Review and finalize construction schedule and verify availability of materials, Installer's personnel, equipment, and facilities needed to make progress and avoid delays.
2. Inspect and discuss preparatory work performed by other trades.
3. Inspect and discuss electrical roughing-in for electrified door hardware.
4. Review sequence of operation for each type of electrified door hardware.
5. Review required testing, inspecting, and certifying procedures.

H. Coordination Conferences:

1. Installation Coordination Conference: Prior to hardware installation, schedule and hold meeting to review questions or concerns related to proper installation and adjustment of door hardware.

2. Electrified Hardware Coordination Conference: Prior to ordering electrified hardware, schedule and hold meeting to coordinate door hardware with security, electrical, doors and frames, and other related suppliers.
3. Verify and coordinate hardware and security system with the Airport Security Officer on site.

1.6 DELIVERY, STORAGE, AND HANDLING

A. Inventory door hardware on receipt and provide secure lock-up for hardware delivered to Project site.

B. Tag each item or package separately with identification coordinated with final door hardware schedule, and include installation instructions, templates, and necessary fasteners with each item or package.

1. Deliver each article of hardware in manufacturer's original packaging.

C. Project Conditions:

1. Maintain manufacturer-recommended environmental conditions throughout storage and installation periods.
2. Provide secure lock-up for door hardware delivered to Project. Control handling and installation of hardware items so that completion of Work will not be delayed by hardware losses both before and after installation.

D. Protection and Damage:

1. Promptly replace products damaged during shipping.
2. Handle hardware in manner to avoid damage, marring, or scratching. Correct, replace or repair products damaged during Work.
3. Protect products against malfunction due to paint, solvent, cleanser, or any chemical agent.

E. Deliver keys to manufacturer of key control system for subsequent delivery to Airport Security Officer.

F. Deliver keys to Owner by registered mail or overnight package service.

1.7 COORDINATION

A. Coordinate layout and installation of floor-recessed door hardware with floor construction. Cast anchoring inserts into concrete.

B. Installation Template: Distribute for door, frame, and other work specified to be factory or shop prepared. Check Shop Drawings of other work to confirm that adequate provisions are made for locating and installing door hardware to comply with indicated requirements.

1. Security: Coordinate installation of door hardware, keying, and access control with Owner's security consultant and the Airport Security Officer on site.

1.8 WARRANTY

A. Warranty: Manufacturer's standard form in which manufacturer agrees to repair or replace components of door hardware that fail in materials or workmanship within specified warranty period.

1. Warranty Period: Beginning from date of Substantial Completion, for durations indicated.

a. Closers:

1) Mechanical: 30 years.

b. Exit Devices:

1) Mechanical: 3 years.

c. Locksets:

1) Mechanical: 3 years.

d. Continuous Hinges: Lifetime warranty.
e. Key Blanks: Lifetime

2. Warranty does not cover damage or faulty operation due to improper installation, improper use or abuse.

1.9 MAINTENANCE

A. Maintenance Tools: Furnish complete set of special tools required for maintenance and adjustment of hardware, including changing of cylinders.

PART 2 - PRODUCTS

2.1 MANUFACTURERS

A. The Owner requires use of certain products for their unique characteristics and project suitability to ensure continuity of existing and future performance and maintenance standards. After investigating available product offerings, the Awarding Authority has elected to prepare proprietary specifications. These products are specified with the notation: “No Substitute.”

1. Where “No Substitute” is noted, submittals and substitution requests for other products will not be considered.

B. Approval of manufacturers and/or products other than those listed as “Scheduled Manufacturer” or “Acceptable Manufacturers” in the individual article for the product category shall be in accordance with QUALITY ASSURANCE article, herein.

C. Approval of products from manufacturers indicated in “Acceptable Manufacturers” is contingent upon those products providing all functions and features and meeting all requirements of scheduled manufacturer’s product.

D. Where specified hardware is not adaptable to finished shape or size of members requiring hardware, furnish suitable types having same operation and quality as type specified, subject to Architect's approval.

2.2 MATERIALS

A. Fasteners

1. Provide hardware manufactured to conform to published templates, generally prepared for machine screw installation.
2. Furnish screws for installation with each hardware item. Finish exposed (exposed under any condition) screws to match hardware finish, or, if exposed in surfaces of other work, to match finish of this other work including prepared for paint surfaces to receive painted finish.
3. Provide concealed fasteners for hardware units exposed when door is closed except when no standard units of type specified are available with concealed fasteners. Do not use thru-bolts for installation where bolt head or nut on opposite face is exposed in other work unless thru-bolts are required to fasten hardware securely. Review door specification and advise Architect if thru-bolts are required.
4. Install hardware with fasteners provided by hardware manufacturer.

B. Provide screws, bolts, expansion shields, drop plates and other devices necessary for hardware installation.

1. Where fasteners are exposed to view: Finish to match adjacent door hardware material.

2.3 HINGES

A. Manufacturers and Products:

1. Scheduled Manufacturer and Product: Ives 5BB series.
2. Acceptable Manufacturers and Products: Hager BB series, McKinney TA/T4A series, Stanley FBB Series.

B. Requirements:

1. Provide hinges conforming to ANSI/BHMA A156.1.
2. 1-3/4 inch (44 mm) thick doors, up to and including 36 inches (914 mm) wide:

    a. Exterior: Standard weight, stainless steel, 4-1/2 inches (114 mm) high
    b. Interior: Standard weight, steel, 4-1/2 inches (114 mm) high

3. 1-3/4 inch (44 mm) thick doors over 36 inches (914 mm) wide:

    a. Exterior: Heavy weight, bronze/stainless steel, 5 inches (127 mm) high
    b. Interior: Heavy weight, steel, 5 inches (127 mm) high

4. 2 inches or thicker doors:

    a. Exterior: Heavy weight, bronze or stainless steel, 5 inches (127 mm) high
    b. Interior: Heavy weight, steel, 5 inches (127 mm) high

5. Provide three hinges per door leaf for doors 90 inches (2286 mm) or less in height, and one additional hinge for each 30 inches (762 mm) of additional door height.
6. Hinge Pins: Except as otherwise indicated, provide hinge pins as follows:

    a. Steel Hinges: Steel pins
    b. Non-Ferrous Hinges: Stainless steel pins
    c. Out-Swinging Exterior Doors: Non-removable pins
    d. Out-Swinging Interior Lockable Doors: Non-removable pins
    e. Interior Non-lockable Doors: Non-rising pins

7. Width of hinges: 4-1/2 inches (114 mm) at 1-3/4 inch (44 mm) thick doors, and 5 inches (127 mm) at 2 inches (51 mm) or thicker doors. Adjust hinge width as required for door, frame, and wall conditions to allow proper degree of opening.
8. Provide hinges with electrified options as scheduled in the hardware sets. Provide with sufficient number and wire gage to accommodate electric function of specified hardware. Locate electric hinge at second hinge from bottom or nearest to electrified locking component.
9. Provide mortar guard for each electrified hinge specified.

2.4 CYLINDRICAL LOCKS – GRADE 2

A. Manufacturers and Products:

1. Scheduled Manufacturer and Product: Schlage AL series.
2. Acceptable Manufacturers and Products: No Substitute to Match Owner's Existing.

B. Requirements

1. Provide cylindrical locks conforming to ANSI/BHMA A156.2 Series 4000, Grade 2, and UL Listed for 3 hour fire doors.
2. Cylinders: Refer to "KEYING" article, herein.
3. Provide locks with standard 2-3/4 inches (70 mm) backset, unless noted otherwise, with 1/2 inch latch throw. Provide proper latch throw for UL listing at pairs.
4. Provide locksets with separate anti-rotation thru-bolts, and no exposed screws.
5. Provide independently operating levers with two external return spring cassettes mounted under roses to prevent lever sag.
6. Provide standard ASA strikes unless extended lip strikes are necessary to protect trim.
7. Lever Trim: Solid cast levers without plastic inserts and wrought roses on both sides.

    a. Lever Design: Schlage Saturn
    b. Tactile Warning (Knurling): Where required by authority having jurisdiction. Provide on levers on exterior (secure side) of doors serving rooms considered to be hazardous.

2.5 EXIT DEVICES

A. Manufacturers and Products:

1. Scheduled Manufacturer and Product: Von Duprin 99 series.
2. Acceptable Manufacturers and Products: Precision APEX 2000 series, Detex Advantex series.

B. Requirements:

1. Provide exit devices tested to ANSI/BHMA A156.3 Grade 1 and UL listed for Panic Exit or Fire Exit Hardware.
2. Cylinders: Refer to “KEYING” article, herein.
3. Provide touchpad type exit devices, fabricated of brass, bronze, stainless steel, or aluminum, plated to standard architectural finishes to match balance of door hardware.
4. Touchpad must extend a minimum of one half of door width. No plastic inserts are allowed in touchpads.
5. Provide exit devices with deadlatching feature for security and for future addition of alarm kits and/or other electrified requirements.
6. Provide flush end caps for exit devices.
7. Provide exit devices with manufacturer’s approved strikes.
8. Provide exit devices cut to door width and height. Install exit devices at height recommended by exit device manufacturer, allowable by governing building codes, and approved by Architect.
9. Mount mechanism case flush on face of doors or provide spacers to fill gaps behind devices. Where glass trim or molding projects off face of door, provide glass bead kits.
10. Provide cylinder or hex-key dogging as specified at non fire-rated openings.
11. Provide factory drilled weep holes for exit devices used in full exterior application, highly corrosive areas, and where noted in hardware sets.
12. Top latch mounting: double or single tab mount for steel doors, face mount for aluminum doors eliminating requirement of tabs, and double tab mount for wood doors.
13. Provide exit devices with optional trim designs to match other lever and pull designs used on the project.

    a. Tactile Warning (Knurling): Where required by authority having jurisdiction. Provide on levers on exterior (secure side) of doors serving rooms considered to be hazardous.

2.6 CYLINDERS

A. Manufacturers and Products:

1. Acceptable Manufacturers and Products: No Substitute to Match Owner’s Existing Best core system.

B. Requirements:

1. Provide cylinders from the same manufacturer of locksets, compliant with ANSI/BHMA A156.5; latest revision; cylinder face finished to match lockset, manufacturer's series as indicated. Refer to "KEYING" article, herein.

2.7 KEYING

A. Provide a factory registered keying system, complying with guidelines in ANSI/BHMA A156.28, incorporating decisions made at keying conference.

B. Provide cylinders/cores keyed into Owner's existing factory registered keying system.

C. Comply with guidelines in ANSI/BHMA A156.28, incorporating decisions made at keying conference.

D. Requirements:

1. Provide permanent cylinders keyed by the manufacturer according to the following key system.
2. Master Keying system as directed by the Owner Airport Security Officer on site.
3. Forward bitting list and keys separately from cylinders, by means as directed by Owner. Failure to comply with forwarding requirements will be cause for replacement of cylinders/cores involved at no additional cost to Owner.
4. Provide keys with the following features:

    a. Material: Nickel silver; minimum thickness of .107-inch (2.3mm)

5. Identification:

    a. Mark permanent cylinders/cores and keys with applicable blind code per DHI publication "Keying Systems and Nomenclature" for identification. Do not provide blind code marks with actual key cuts.
    b. Identification stamping provisions must be approved by the Architect and Owner.
    c. Stamp cylinders/cores and keys with Owner's unique key system facility code as established by the manufacturer; key symbol and embossed or stamped with "DO NOT DUPLICATE" along with the "PATENTED" or patent number to enforce the patent protection.
    d. Failure to comply with stamping requirements will be cause for replacement of keys involved at no additional cost to Owner.
    e. Forward permanent cylinders/cores to Owner, separately from keys, by means as directed by Owner.

6. Quantity: Furnish in the following quantities.

    a. Change (Day) Keys: 3 per cylinder/core.
    b. Master Keys: 6.

2.8 DOOR CLOSERS

A. Manufacturers and Products:

1. Scheduled Manufacturer and Product: LCN 4050 series.
2. Acceptable Manufacturers and Products: Falcon SC70A series, Norton 7500 series.

B. Requirements:

1. Provide door closers conforming to ANSI/BHMA A156.4 Grade 1 requirements by BHMA certified independent testing laboratory. ISO 9000 certify closers. Stamp units with date of manufacture code.
2. Provide door closers with fully hydraulic, full rack and pinion action with cast aluminum cylinder.
3. Closer Body: 1-1/2 inch (38 mm) diameter with 11/16 inch (17 mm) diameter heat-treated pinion journal and full complement bearings.
4. Hydraulic Fluid: Fireproof, passing requirements of UL10C, and all weather requiring no seasonal closer adjustment for temperatures ranging from 120 degrees F to -30 degrees F.
5. Spring Power: Continuously adjustable over full range of closer sizes, and providing reduced opening force as required by accessibility codes and standards.
6. Hydraulic Regulation: By tamper-proof, non-critical valves, with separate adjustment for latch speed, general speed, and back check.
7. Pressure Relief Valve (PRV) Technology: Not permitted.
8. Provide stick on templates, special templates, drop plates, mounting brackets, or adapters for arms as required for details, overhead stops, and other door hardware items interfering with closer mounting.

2.9 PROTECTION PLATES

A. Manufacturers:

1. Scheduled Manufacturer: Ives.
2. Acceptable Manufacturers: Burns, Rockwood.

B. Requirements:

1. Provide kick plates, mop plates, and armor plates minimum of 0.050 inch (1 mm) thick, beveled four edges as scheduled. Furnish with sheet metal or wood screws, finished to match plates.
2. Sizes of plates:

    a. Kick Plates: 10 inches (254 mm) high by 2 inches (51 mm) less width of door on single doors, 1 inch (25 mm) less width of door on pairs
    b. Mop Plates: 4 inches (102 mm) high by 2 inches (51 mm) less width of door on single doors, 1 inch (25 mm) less width of door on pairs
    c. Armor Plates: 36 inches (914 mm) high by 2 inches (51 mm) less width of door on single doors, 1 inch (25 mm) less width of door on pairs

2.10 OVERHEAD STOPS AND OVERHEAD STOP/HOLDERS

A. Manufacturers:

1. Scheduled Manufacturers: Glynn-Johnson.

2. Acceptable Manufacturers: Rixson, Sargent.

B. Requirements:

1. Provide heavy duty concealed mounted overhead stop or holder as specified for exterior and interior vestibule single acting doors.
2. Provide heavy or medium duty and concealed or surface mounted overhead stop or holder for interior doors as specified. Provide medium duty surface mounted overhead stop for interior doors and at any door that swings more than 140 degrees before striking wall, open against equipment, casework, sidelights, and where conditions do not allow wall stop or floor stop presents tripping hazard.
3. Where overhead holders are specified provide positive type at doors with closer.

2.11 DOOR STOPS AND HOLDERS

A. Manufacturers:

1. Scheduled Manufacturer: Ives.
2. Acceptable Manufacturers: Burns, Rockwood.

B. Provide door stop at door leaf:

1. Provide wall stops wherever possible. Provide convex type where mortise type locks are used and concave type where cylindrical type locks are used.
2. Where a wall stop cannot be used, provide universal floor stops for low or high rise options.
3. Where wall or floor stop cannot be used, provide medium duty surface mounted overhead stop.

2.12 THRESHOLDS, SEALS, DOOR SWEEPS, AUTOMATIC DOOR BOTTOMS, AND GASKETING

A. Manufacturers:

1. Scheduled Manufacturer: Zero International.
2. Acceptable Manufacturers: National Guard, Reese.

B. Requirements:

1. Provide thresholds, weather-stripping (including door sweeps, seals, and astragals) and gasketing systems (including smoke, sound, and light) as specified and per architectural details. Match finish of other items.
2. Smoke- and Draft-Control Door Assemblies: Where smoke- and draft-control door assemblies are required, provide door hardware that meets requirements of assemblies tested according to UL 1784 and installed in compliance with NFPA 105.
3. Size of thresholds:

    a. Saddle Thresholds: 1/2 inch (13 mm) high by jamb width by door width
    b. Bumper Seal Thresholds: 1/2 inch (13 mm) high by 5 inches (127 mm) wide by door width

4. Provide door sweeps, seals, astragals, and auto door bottoms only of type where resilient or flexible seal strip is easily replaceable and readily available.

2.13 SILENCERS

A. Manufacturers:

1. Scheduled Manufacturer: Ives.
2. Acceptable Manufacturers: Burns, Rockwood.

B. Requirements:

1. Provide "push-in" type silencers for hollow metal or wood frames.
2. Provide one silencer per 30 inches (762 mm) of height on each single frame, and two for each pair frame.
3. Omit where gasketing is specified.

2.14 FINISHES

A. Finish: BHMA 626/652 (US26D); except:

1. Continuous Hinges: BHMA 628 (US28)
2. Protection Plates: BHMA 630 (US32D)
3. Overhead Stops and Holders: BHMA 630 (US32D)
4. Door Closers: Powder Coat to Match
5. Wall Stops: BHMA 630 (US32D)
6. Weatherstripping: Clear Anodized Aluminum
7. Thresholds: Mill Finish Aluminum

PART 3 - EXECUTION

3.1 EXAMINATION

A. Prior to installation of hardware, examine doors and frames, with Installer present, for compliance with requirements for installation tolerances, labeled fire-rated door assembly construction, wall and floor construction, and other conditions affecting performance.

B. Field verify existing doors and frames receiving new hardware and existing conditions receiving new openings. Verify that new hardware is compatible with existing door and frame preparation and existing conditions.

C. Examine roughing-in for electrical power systems to verify actual locations of wiring connections before electrified door hardware installation.

D. Proceed with installation only after unsatisfactory conditions have been corrected.

3.2 INSTALLATION

A. Mount door hardware unit at heights to comply with the following, unless otherwise indicated or required to comply with governing regulations.

1. Standard Steel Doors and Frames: ANSI/SDI A250.8.
2. Custom Steel Doors and Frames: HMMA 831.

B. Install each hardware item in compliance with manufacturer's instructions and recommendations, using only fasteners provided by manufacturer.

C. Do not install surface mounted items until finishes have been completed on substrate. Protect all installed hardware during painting.

D. Set units level, plumb and true to line and location. Adjust and reinforce attachment substrate as necessary for proper installation and operation.

E. Drill and countersink units that are not factory prepared for anchorage fasteners. Space fasteners and anchors according to industry standards.

F. Install operating parts so they move freely and smoothly without binding, sticking, or excessive clearance.

G. Hinges: Install types and in quantities indicated in door hardware schedule but not fewer than quantity recommended by manufacturer for application indicated or one hinge for every 30 inches (750 mm) of door height, whichever is more stringent, unless other equivalent means of support for door, such as spring hinges or pivots, are provided.

H. Key Control System: Tag keys and place them on markers and hooks in key control system cabinet, as determined by final keying schedule.

I. Door Closers: Mount closers on room side of corridor doors, inside of exterior doors, and stair side of stairway doors from corridors. Mount closers so they are not visible in corridors, lobbies and other public spaces unless approved by Architect.

J. Closer/Holders: Mount closer/holders on room side of corridor doors, inside of exterior doors, and stair side of stairway doors.

K. Thresholds: Set thresholds in full bed of sealant complying with requirements specified in Division 07 Section "Joint Sealants."

L. Stops: Provide floor stops for doors unless wall or other type stops are indicated in door hardware schedule. Do not mount floor stops where they may impede traffic or present tripping hazard.

M. Perimeter Gasketing: Apply to head and jamb, forming seal between door and frame.

N. Meeting Stile Gasketing: Fasten to meeting stiles, forming seal when doors are closed.

3.3 FIELD QUALITY CONTROL

A. Engage qualified manufacturer trained representative to perform inspections and to prepare inspection reports.

1. Representative will inspect door hardware and state in each report whether installed work complies with or deviates from requirements, including whether door hardware is properly installed and adjusted.

3.4 ADJUSTING

A. Initial Adjustment: Adjust and check each operating item of door hardware and each door to ensure proper operation or function of every unit. Replace units that cannot be adjusted to operate as intended. Adjust door control devices to compensate for final operation of heating and ventilating equipment and to comply with referenced accessibility requirements.

1. Door Closers: Adjust sweep period to comply with accessibility requirements and requirements of authorities having jurisdiction.

B. Occupancy Adjustment: Approximately three to six months after date of Substantial Completion, Installer's Architectural Hardware Consultant must examine and readjust each item of door hardware, including adjusting operating forces, as necessary to ensure function of doors and door hardware.

3.4 CLEANING AND PROTECTION

A. Clean adjacent surfaces soiled by door hardware installation.

B. Clean operating items as necessary to restore proper function and finish.

C. Provide final protection and maintain conditions that ensure door hardware is without damage or deterioration at time of Substantial Completion.

3.5 DOOR HARDWARE SCHEDULE

A. Hardware items are referenced in the following hardware. Refer to the above-specifications for special features, options, cylinders/keying, and other requirements.

B. Hardware Sets:

1. Hardware Group No. 1 – 7’-0” H X 3’-8” W, 1 HOUR FIRE RATED EXIT DOOR MT 10

QTY		DESCRIPTION	CATALOG NUMBER	FINISH	MFR
3	EA	HINGE	5BB1HW 4.5 X 4.5	652	IVE
1	EA	FIRE EXIT HARDWARE	99-L-BE-F-996-06	626	VON
1	EA	LEVER TRIM	996L-R/V-06 WITH BEST CORE	626	VON
1	EA	SURFACE CLOSER	4050 RW/PA (MOUNT PULL SIDE, REG ARM)	689	LCN
2	EA	KICK PLATES	8400 10" X 1 1/2" LDW B-CS	630	IVE
1	EA	WALL STOP	WS406/407CCV	630	IVE
1	EA	FLOOR HOLDER	FS9 SEMI AUTOMATIC HOLD	630	IVE
1	EA	GASKETING	188SBK PSA	BK	ZER

REINSTALL EXISTING CARD READER AND COORDINATE WITH THE AIPRORT SECURITY OFFICER. PREPARE DOOR JAMB TO RECEIVE ELECTONIC STRIKE BY Miller Information Services.

C. Work provided under this contract, as specified in section 012100 Allowances to be performed by the airport security contactor:

1. Hes 9600 Series Surface Mounted electric Strike (By MIS)
2. Magnasphere MSS-20CL-W Door Position Switch (By MIS)
3. Bosch DS150i Request to Exit Sensor or comparable for weather rating (By MIS)
4. MIS will demo existing configuration salvaging card reader and wiring for reuse
5. During installation of new Frame, MIS will re-trim cabling in the door for new configuration (rough-ins should be reviewed prior to frame being set)
6. MIS to Reinstall salvaged card reader on terminal side, install new devices, test and program
7. MIS also to pull new Cat6 for New fixed camera location (Camera by MIS as well), and tie into Genetec platform.

END OF SECTION 087100

This page intentionally left blank.

SECTION 092900 - GYPSUM BOARD

PART 1 - GENERAL

1.1 SUMMARY

A. Section Includes:

1. Interior gypsum board.

1.2 ACTION SUBMITTALS

A. Product Data: For each type of product.

PART 2 - PRODUCTS

2.1 GYPSUM BOARD, GENERAL

A. Size: Provide maximum lengths and widths available that will minimize joints in each area and that correspond with support system indicated.

2.2 INTERIOR GYPSUM BOARD

A. Gypsum Wallboard: ASTM C1396/C1396M.

1. Thickness: 5/8 inch.
2. Long Edges: Tapered.

B. Gypsum Board, Type X: ASTM C1396/C1396M.

1. Thickness: 5/8 inch.
2. Long Edges: Tapered

C. Gypsum Ceiling Board: ASTM C1396/C1396M.

1. Thickness: 1/2 inch.
2. Long Edges: Tapered.

2.3 TRIM ACCESSORIES

A. Interior Trim: ASTM C1047.

1. Material: rolled zinc, plastic, or paper-faced galvanized-steel sheet
2. Shapes:

    a. Cornerbead.
    b. LC-Bead: J-shaped; exposed long flange receives joint compound.
    c. L-Bead: L-shaped; exposed long flange receives joint compound.
    d. U-Bead: J-shaped; exposed short flange does not receive joint compound.

e. Expansion (control) joint.

2.4 JOINT TREATMENT MATERIALS

A. General: Comply with ASTM C475/C475M.

B. Joint Tape:

1. Interior Gypsum Board: Paper.

C. Joint Compound for Interior Gypsum Board: For each coat, use formulation that is compatible with other compounds applied on previous or for successive coats.

1. Prefilling: At open joints and damaged surface areas, use setting-type taping compound.
2. Embedding and First Coat: For embedding tape and first coat on joints, fasteners, and trim flanges, use drying-type, all-purpose compound.

a. Use setting-type compound for installing paper-faced metal trim accessories.

3. Fill Coat: For second coat, use drying-type, all-purpose compound.
4. Finish Coat: For third coat, use drying-type, all-purpose compound.

2.5 AUXILIARY MATERIALS

A. General: Provide auxiliary materials that comply with referenced installation standards and manufacturer's written instructions.

B. Laminating Adhesive: Adhesive or joint compound recommended for directly adhering gypsum panels to continuous substrate.

C. Steel Drill Screws: ASTM C1002 unless otherwise indicated.

1. Use screws complying with ASTM C954 for fastening panels to steel members from 0.033 to 0.112 inch thick.

D. Thermal Insulation: As specified in Section 072100 "Thermal Insulation."

PART 3 - EXECUTION

3.1 APPLYING AND FINISHING PANELS

A. Examine panels before installation. Reject panels that are wet, moisture damaged, and mold damaged.

B. Comply with ASTM C840.

C. Isolate perimeter of gypsum board applied to non-load-bearing partitions at structural abutments. Provide 1/4- to 1/2-inch-wide spaces at these locations and trim edges with

edge trim where edges of panels are exposed. Seal joints between edges and abutting structural surfaces with acoustical sealant.

D. For trim with back flanges intended for fasteners, attach to framing with same fasteners used for panels. Otherwise, attach trim according to manufacturer's written instructions.

E. Prefill open joints and damaged surface areas.

F. Apply joint tape over gypsum board joints, except for trim products specifically indicated as not intended to receive tape.

G. Gypsum Board Finish Levels: Finish panels to levels indicated below and according to ASTM C840:

1. Level 4: At panel surfaces that will be exposed to view unless otherwise indicated.

a. Primer and its application to surfaces are specified in Section 099123 "Interior Painting."

3.2 PROTECTION

A. Protect installed products from damage from weather, condensation, direct sunlight, construction, and other causes during remainder of the construction period.

B. Remove and replace panels that are wet, moisture damaged, and mold damaged.

END OF SECTION 092900

This page intentionally left blank.

SECTION 096513 - RESILIENT BASE AND ACCESSORIES

PART 1 - GENERAL

1.1 RELATED DOCUMENTS

A. Drawings and general provisions of the Contract, including General and Supplementary Conditions and Division 01 Specification Sections, apply to this Section.

1.2 SUMMARY

A. Section Includes:

1. Thermoset-rubber base.
2. Rubber stair accessories.
3. Rubber molding accessories.

1.3 ACTION SUBMITTALS

A. Product Data: For each type of product.

B. Samples: For each exposed product and for each color and texture specified, not less than 12 inches (300 mm) long.

C. Samples for Initial Selection: For each type of product indicated.

D. Samples for Verification: For each type of product indicated and for each color, texture, and pattern required in manufacturer's standard-size Samples, but not less than 12 inches (300 mm) long.

E. Product Schedule: For resilient base and accessory products. Use same designations indicated on Drawings.

1.4 MAINTENANCE MATERIAL SUBMITTALS

A. Furnish extra materials, from the same product run, that match products installed and that are packaged with protective covering for storage and identified with labels describing contents.

1. Furnish not less than 10 linear feet (3 linear m) for every 500 linear feet (150 linear m) or fraction thereof, of each type, color, pattern, and size of resilient product installed.

1.5 QUALITY ASSURANCE

A. Mockups: Build mockups to verify selections made under Sample submittals, to demonstrate aesthetic effects, and to set quality standards for materials and execution.

1. Coordinate mockups in this Section with mockups specified in other Sections.

2. Approval of mockups does not constitute approval of deviations from the Contract Documents contained in mockups unless Architect specifically approves such deviations in writing.
3. Subject to compliance with requirements, approved mockups may become part of the completed Work if undisturbed at time of Substantial Completion.

1.6 DELIVERY, STORAGE, AND HANDLING

A. Store resilient products and installation materials in dry spaces protected from the weather, with ambient temperatures maintained within range recommended by manufacturer, but not less than 50 deg F (10 deg C) or more than 90 deg F (32 deg C).

1.7 FIELD CONDITIONS

A. Maintain ambient temperatures within range recommended by manufacturer, but not less than 70 deg F (21 deg C) or more than [95 deg F (35 deg C), in spaces to receive resilient products during the following periods:

1. 48 hours before installation.
2. During installation.
3. 48 hours after installation.

B. After installation and until Substantial Completion, maintain ambient temperatures within range recommended by manufacturer, but not less than 55 deg F (13 deg C) or more than 95 deg F (35 deg C).

C. Install resilient products after other finishing operations, including painting, have been completed.

PART 2 - PRODUCTS

2.1 PERFORMANCE REQUIREMENTS

2.2 THERMOSET-RUBBER BASE

A. Manufacturers: Subject to compliance with requirements, provide products by one of the following:

1. Burke Mercer Flooring Products; a division of Burke Industries Inc.
2. Flexco.
3. Johnsonite; a Tarkett company.

B. Product Standard: ASTM F 1861, Type TS (rubber, vulcanized thermoset), Group I (solid, homogeneous).

1. Style and Location:

a. Style B, Cove: Provide in areas noted on the room finish schedule.

C. Thickness: 0.125 inch (3.2 mm).

D. Height: 4 inches (102 mm).

E. Lengths: Coils in manufacturer's standard length

F. Outside Corners: Job formed.

G. Inside Corners: Job formed.

H. Colors: Match Architect's sample as selected from manufacturers full range.

2.3 RUBBER STAIR ACCESSORIES

A. Fire-Test-Response Characteristics: As determined by testing identical products according to ASTM E 648 or NFPA 253 by a qualified testing agency.

1. Critical Radiant Flux Classification: Class I, not less than 0.45 W/sq. cm.

B. Manufacturers: Subject to compliance with requirements, provide products by one of the following:

1. Flexco.
2. Johnsonite; a Tarkett company.
3. Roppe Corporation, USA.

C. Stair Treads: ASTM F 2169.

1. Type: TS (rubber, vulcanized thermoset) or TP (rubber, thermoplastic).
2. Class: 2 (square pattern; embossed).
3. Nosing Style: Square, adjustable to cover angles between 60 and 90 degrees for angled riser fronts.
4. Nosing Height: 2 inches (51 mm).
5. Thickness: 1/4 inch (6 mm) and tapered to back edge.
6. Size: Lengths and depths to fit each stair tread in piece or, for treads exceeding maximum lengths manufactured, in equal-length units.
7. Integral Risers: Smooth, flat; in height that fully covers substrate.

D. Separate Risers: Smooth, flat; in height that fully covers substrate; produced by same manufacturer as treads and recommended by manufacturer for installation with treads.

1. Style: Coved toe, 7 inches (178 mm) high by length matching treads.
2. Thickness: 0.125 inch (3.2 mm).

E. Landing Tile: Matching treads with square embossed pattern; produced by same manufacturer as treads and recommended by manufacturer for installation with treads.

F. Locations: Provide rubber stair accessories in areas indicated within new stair construction.

G. Colors and Patterns: Match match existing Architect's sample.

2.4 RUBBER MOLDING ACCESSORIES:

A. Manufacturers: Subject to compliance with requirements, provide products by the following:

1. Flexco.
2. Johnsonite; a Tarkett company.
3. Roppe Corporation, USA.

B. Description: Rubber cap for cove carpet, carpet edge for glue-down applications nosing for carpet nosing for resilient floor covering and transition strips.

C. Profile and Dimensions: Manufacturer’s standard rounded.

D. Locations: At all locations where new flooring is installed at changed in floor surface materials.

E. Colors and Patterns: Match exhisting and Architect's sample.

2.5 INSTALLATION MATERIALS

A. Trowelable Leveling and Patching Compounds: Latex-modified, portland-cement-based or blended hydraulic-cement-based formulation provided or approved by resilient-product manufacturer for applications indicated.

B. Adhesives: Water-resistant type recommended by resilient-product manufacturer for resilient products and substrate conditions indicated.

C. Stair-Tread Nose Filler: Two-part epoxy compound recommended by resilient stair-tread manufacturer to fill nosing substrates that do not conform to tread contours.

D. Floor Polish: Provide protective, liquid floor-polish products recommended by resilient stair-tread manufacturer.

PART 3 - EXECUTION

3.1 EXAMINATION

A. Examine substrates, with Installer present, for compliance with requirements for maximum moisture content and other conditions affecting performance of the Work.

1. Verify that finishes of substrates comply with tolerances and other requirements specified in other Sections and that substrates are free of cracks, ridges, depressions, scale, and foreign deposits that might interfere with adhesion of resilient products.

B. Proceed with installation only after unsatisfactory conditions have been corrected.

1. Installation of resilient products indicates acceptance of surfaces and conditions.

3.2 PREPARATION

A. Prepare substrates according to manufacturer's written instructions to ensure adhesion of resilient products.

B. Concrete Substrates for Resilient Stair Accessories: Prepare horizontal surfaces according to ASTM F 710.

1. Verify that substrates are dry and free of curing compounds, sealers, and hardeners.
2. Remove substrate coatings and other substances that are incompatible with adhesives and that contain soap, wax, oil, or silicone, using mechanical methods recommended by manufacturer. Do not use solvents.
3. Alkalinity and Adhesion Testing: Perform tests recommended by manufacturer. Proceed with installation only after substrate alkalinity falls within range on pH scale recommended by manufacturer in writing, but not less than 5 or more than 10 pH.
4. Moisture Testing: Perform tests so that each test area does not exceed 200 sq. ft. (18.6 sq. m) and perform no fewer than three tests in each installation area and with test areas evenly spaced in installation areas.

    a. Anhydrous Calcium Chloride Test: ASTM F 1869. Proceed with installation only after substrates have maximum moisture-vapor-emission rate of 3 lb of water/1000 sq. ft. (1.36 kg of water/92.9 sq. m) in 24 hours.
    b. Relative Humidity Test: Using in-situ probes, ASTM F 2170. Proceed with installation only after substrates have a maximum 75 percent relative humidity level measurement.

C. Fill cracks, holes, and depressions in substrates with trowelable leveling and patching compound; remove bumps and ridges to produce a uniform and smooth substrate.

D. Do not install resilient products until materials are the same temperature as space where they are to be installed.

1. At least 48 hours in advance of installation, move resilient products and installation materials into spaces where they will be installed.

E. Immediately before installation, sweep and vacuum clean substrates to be covered by resilient products.

3.3 RESILIENT BASE INSTALLATION

A. Comply with manufacturer's written instructions for installing resilient base.

B. Apply resilient base to walls, columns, pilasters, casework and cabinets in toe spaces, and other permanent fixtures in rooms and areas where base is required.

C. Install resilient base in lengths as long as practical without gaps at seams and with tops of adjacent pieces aligned.

D. Tightly adhere resilient base to substrate throughout length of each piece, with base in continuous contact with horizontal and vertical substrates.

E. Do not stretch resilient base during installation.

F. On masonry surfaces or other similar irregular substrates, fill voids along top edge of resilient base with manufacturer's recommended adhesive filler material.

G. Preformed Corners: Install preformed corners before installing straight pieces.

H. Job-Formed Corners:

1. Outside Corners: Use straight pieces of maximum lengths possible and form with returns not less than 3 inches (76 mm) in length.

    a. Form without producing discoloration (whitening) at bends.

2. Inside Corners: Use straight pieces of maximum lengths possible and form with returns not less than 3 inches (76 mm) in length.

    a. Miter or cope corners to minimize open joints.

3.4 RESILIENT ACCESSORY INSTALLATION

A. Comply with manufacturer's written instructions for installing resilient accessories.

B. Resilient Stair Accessories:

1. Use stair-tread-nose filler to fill nosing substrates that do not conform to tread contours.
2. Tightly adhere to substrates throughout length of each piece.
3. For treads installed as separate, equal-length units, install to produce a flush joint between units.

C. Resilient Molding Accessories: Butt to adjacent materials and tightly adhere to substrates throughout length of each piece. Install reducer strips at edges of floor covering that would otherwise be exposed.

3.5 CLEANING AND PROTECTION

A. Comply with manufacturer's written instructions for cleaning and protecting resilient products.

B. Perform the following operations immediately after completing resilient-product installation:

1. Remove adhesive and other blemishes from surfaces.
2. Sweep and vacuum horizontal surfaces thoroughly.
3. Damp-mop horizontal surfaces to remove marks and soil.

C. Protect resilient products from mars, marks, indentations, and other damage from construction operations and placement of equipment and fixtures during remainder of construction period.

D. Floor Polish: Remove soil, adhesive, and blemishes from resilient stair treads before applying liquid floor polish.

1. Apply two coat(s).

E. Cover resilient products subject to wear and foot traffic until Substantial Completion.

END OF SECTION 096513

This page intentionally left blank.

SECTION 099113 - EXTERIOR PAINTING

PART 1 - GENERAL

1.1 SUMMARY

A. Section includes surface preparation and the application of paint systems on the following exterior substrates:

1. Concrete.
2. Steel and iron.
3. Galvanized metal.

1.2 DEFINITIONS

A. MPI Gloss Level 1: Not more than five units at 60 degrees and 10 units at 85 degrees, according to ASTM D523.

B. MPI Gloss Level 3: 10 to 25 units at 60 degrees and 10 to 35 units at 85 degrees, according to ASTM D523.

C. MPI Gloss Level 4: 20 to 35 units at 60 degrees and not less than 35 units at 85 degrees, according to ASTM D523.

D. MPI Gloss Level 5: 35 to 70 units at 60 degrees, according to ASTM D523.

E. MPI Gloss Level 6: 70 to 85 units at 60 degrees, according to ASTM D523.

F. MPI Gloss Level 7: More than 85 units at 60 degrees, according to ASTM D523.

1.3 ACTION SUBMITTALS

A. Product Data: For each type of product. Include preparation requirements and application instructions.

1. Include printout of current "MPI Approved Products List" for each product category specified, with the proposed product highlighted.

B. Samples: For each type of paint system and each color and gloss of topcoat.

1.4 QUALITY ASSURANCE

A. Mockups: Apply mockups of each paint system indicated and each color and finish selected to verify preliminary selections made under Sample submittals and to demonstrate aesthetic effects and set quality standards for materials and execution.

1. Architect will select one surface to represent surfaces and conditions for application of each paint system.

a. Vertical and Horizontal Surfaces: Provide samples of at least 100 sq. ft.
b. Other Items: Architect will designate items or areas required.

2. Final approval of color selections will be based on mockups.

    a. If preliminary color selections are not approved, apply additional mockups of additional colors selected by Architect at no added cost to Owner.

PART 2 - PRODUCTS

2.1 MANUFACTURERS

A. Manufacturers: Subject to compliance with requirements, available manufacturers offering products that may be incorporated into the Work include, but are not limited to the following:

1. PPG Paints.
2. Rust-Oleum Corporation; a subsidiary of RPM International, Inc.
3. Sherwin-Williams Company (The).
4. Valspar Corporation (The).

2.2 PAINT, GENERAL

A. MPI Standards: Products shall comply with MPI standards indicated and shall be listed in its "MPI Approved Products Lists."

B. Material Compatibility:

1. Materials for use within each paint system shall be compatible with one another and substrates indicated, under conditions of service and application as demonstrated by manufacturer, based on testing and field experience.
2. For each coat in a paint system, products shall be recommended in writing by topcoat manufacturers for use in paint system and on substrate indicated.

C. Colors: As selected by Architect from manufacturer's full range.

1. Ten percent of surface area will be painted with deep tones.

PART 3 - EXECUTION

3.1 EXAMINATION

A. Examine substrates and conditions, with Applicator present, for compliance with requirements for maximum moisture content and other conditions affecting performance of the Work.

B. Maximum Moisture Content of Substrates: When measured with an electronic moisture meter as follows:

1. Concrete: 12 percent.

C. Verify suitability of substrates, including surface conditions and compatibility with existing finishes and primers.

D. Proceed with coating application only after unsatisfactory conditions have been corrected.

1. Application of coating indicates acceptance of surfaces and conditions.

3.2 PREPARATION

A. Comply with manufacturer's written instructions and recommendations in "MPI Architectural Painting Specification Manual" applicable to substrates and paint systems indicated.

B. Remove hardware, covers, plates, and similar items already in place that are removable and are not to be painted. If removal is impractical or impossible because of size or weight of item, provide surface-applied protection before surface preparation and painting.

1. After completing painting operations, use workers skilled in the trades involved to reinstall items that were removed. Remove surface-applied protection.

3.3 APPLICATION

A. Apply paints according to manufacturer's written instructions and recommendations in "MPI Manual."

B. Apply paints to produce surface films without cloudiness, spotting, holidays, laps, brush marks, roller tracking, runs, sags, ropiness, or other surface imperfections. Cut in sharp lines and color breaks.

3.4 CLEANING AND PROTECTION

A. Protect work of other trades against damage from paint application. Correct damage to work of other trades by cleaning, repairing, replacing, and refinishing, as approved by Architect, and leave in an undamaged condition.

B. At completion of construction activities of other trades, touch up and restore damaged or defaced painted surfaces.

3.5 EXTERIOR PAINTING SCHEDULE

A. Concrete Substrates, Nontraffic Surfaces:

1. Latex System MPI EXT 3.1A:

a. Prime Coat: Primer, alkali resistant, water based, MPI #3.
b. Intermediate Coat: Latex, exterior, matching topcoat.
c. Topcoat: Latex, exterior, low sheen (MPI Gloss Level 3-4), MPI #15.

B. Steel and Iron Substrates:

1. Water-Based Light Industrial Coating System MPI EXT 5.1C:

a. Prime Coat: Primer, alkyd, anti-corrosive for metal, MPI #79.

b. Intermediate Coat: Light industrial coating, exterior, water based, matching topcoat.
c. Topcoat: Light industrial coating, exterior, water based, semi-gloss (MPI Gloss Level 5), MPI #163.

END OF SECTION 099113

SECTION 099123 - INTERIOR PAINTING

PART 1 - GENERAL

1.1 SUMMARY

A. Section includes surface preparation and the application of paint systems on interior substrates. the following interior substrates:

1. Concrete.
2. Concrete masonry units (CMUs).
3. Steel and iron.
4. Gypsum board.

1.2 DEFINITIONS

A. MPI Gloss Level 1: Not more than five units at 60 degrees and 10 units at 85 degrees, according to ASTM D523.

B. MPI Gloss Level 2: Not more than 10 units at 60 degrees and 10 to 35 units at 85 degrees, according to ASTM D523.

C. MPI Gloss Level 3: 10 to 25 units at 60 degrees and 10 to 35 units at 85 degrees, according to ASTM D523.

D. MPI Gloss Level 4: 20 to 35 units at 60 degrees and not less than 35 units at 85 degrees, according to ASTM D523.

E. MPI Gloss Level 5: 35 to 70 units at 60 degrees, according to ASTM D523.

F. MPI Gloss Level 6: 70 to 85 units at 60 degrees, according to ASTM D523.

G. MPI Gloss Level 7: More than 85 units at 60 degrees, according to ASTM D523.

1.3 ACTION SUBMITTALS

A. Product Data: For each type of product. Include preparation requirements and application instructions.

1. Include Printout of current "MPI Approved Products List" for each product category specified, with the proposed product highlighted.

B. Samples: For each type of paint system and in each color and gloss of topcoat.

1.4 QUALITY ASSURANCE

A. Mockups: Apply mockups of each paint system indicated and each color and finish selected to verify preliminary selections made under Sample submittals and to demonstrate aesthetic effects and set quality standards for materials and execution.

1. Architect will select one surface to represent surfaces and conditions for application of each paint system.

    a. Vertical and Horizontal Surfaces: Provide samples of at least 100 sq. ft.
    b. Other Items: Architect will designate items or areas required.

2. Final approval of color selections will be based on mockups.

    a. If preliminary color selections are not approved, apply additional mockups of additional colors selected by Architect at no added cost to Owner.

PART 2 - PRODUCTS

2.1 MANUFACTURERS

A. Manufacturers: Subject to compliance with requirements, available manufacturers offering products that may be incorporated into the Work are limited to the following:

1. PPG Paints.
2. Rust-Oleum Corporation; a subsidiary of RPM International, Inc.
3. Sherwin-Williams Company (The).
4. Valspar Corporation (The).

2.2 PAINT, GENERAL

A. MPI Standards: Products shall comply with MPI standards indicated and shall be listed in its "MPI Approved Products Lists."

B. Material Compatibility:

1. Materials for use within each paint system shall be compatible with one another and substrates indicated, under conditions of service and application as demonstrated by manufacturer, based on testing and field experience.
2. For each coat in a paint system, products shall be recommended in writing by topcoat manufacturers for use in paint system and on substrate indicated.

C. Colors: As selected by Architect from manufacturer's full range.

1. Ten percent of surface area will be painted with deep tones.

PART 3 - EXECUTION

3.1 EXAMINATION

A. Examine substrates and conditions, with Applicator present, for compliance with requirements for maximum moisture content and other conditions affecting performance of the Work.

B. Maximum Moisture Content of Substrates: When measured with an electronic moisture meter as follows:

1. Concrete: 12 percent.
2. Masonry (Clay and CMUs): 12 percent.
3. Gypsum Board: 12 percent.

C. Verify suitability of substrates, including surface conditions and compatibility with existing finishes and primers.

D. Proceed with coating application only after unsatisfactory conditions have been corrected.

1. Application of coating indicates acceptance of surfaces and conditions.

3.2 PREPARATION

A. Comply with manufacturer's written instructions and recommendations in "MPI Architectural Painting Specification Manual" applicable to substrates and paint systems indicated.

B. Remove hardware, covers, plates, and similar items already in place that are removable and are not to be painted. If removal is impractical or impossible because of size or weight of item, provide surface-applied protection before surface preparation and painting.

1. After completing painting operations, use workers skilled in the trades involved to reinstall items that were removed. Remove surface-applied protection if any.

3.3 APPLICATION

A. Apply paints according to manufacturer's written instructions and recommendations in "MPI Architectural Painting Specification Manual."

B. Apply paints to produce surface films without cloudiness, spotting, holidays, laps, brush marks, roller tracking, runs, sags, ropiness, or other surface imperfections. Cut in sharp lines and color breaks.

3.4 INTERIOR PAINTING SCHEDULE

A. Concrete Substrates, Nontraffic Surfaces:

1. Latex System MPI INT 3.1A:

a. Prime Coat: Primer, alkali resistant, water based, MPI #3.
b. Intermediate Coat: Latex, interior, matching topcoat.
c. Topcoat: Latex, interior, (MPI Gloss Level 5), MPI #54.

B. CMU Substrates:

1. Latex System MPI INT 4.2A:

a. Block Filler: Block filler, latex, interior/exterior, MPI #4.
b. Intermediate Coat: Latex, interior, matching topcoat.
c. Topcoat: Latex, interior, semi-gloss (MPI Gloss Level 5), MPI #54.

C. Steel Substrates:

1. Latex System, Alkyd Primer MPI INT 5.1Q:

a. Prime Coat: Primer, alkyd, quick dry, for metal, MPI #76.
b. Intermediate Coat: Latex, interior, matching topcoat.
c. Topcoat: Latex, interior, semi-gloss (MPI Gloss Level 5), MPI #54.

2. Latex over Shop-Applied Quick-Drying Shop Primer System MPI INT 5.1X:

a. Prime Coat: Primer, quick dry, for shop application, MPI #275.
b. Intermediate Coat: Latex, interior, matching topcoat.
c. Topcoat: Latex, interior, semi-gloss (MPI Gloss Level 5), MPI #54.

D. Gypsum Board Substrates:

1. Latex over Latex Sealer System MPI INT 9.2A:

a. Prime Coat: Primer sealer, latex, interior, MPI #50.
b. Intermediate Coat: Latex, interior, matching topcoat.
c. Topcoat: Latex, interior (MPI Gloss Level 3), MPI #52.

END OF SECTION 099123

SECTION 101423 - ROOM-IDENTIFICATION SIGNAGE

PART 1 - GENERAL

1.1 RELATED DOCUMENTS

A. Drawings and general provisions of the Contract, including General and Supplementary Conditions and Division 01 Specification Sections, apply to this Section.

1.2 SUMMARY

A. Section includes room-identification signs that are directly attached to the building.

1.3 DEFINITIONS

A. Accessible: In accordance with the accessibility standard.

1.4 COORDINATION

A. Furnish templates for placement of sign-anchorage devices embedded in permanent construction by other installers.

B. Furnish templates for placement of electrical service embedded in permanent construction by other installers.

1.5 ACTION SUBMITTALS

A. Product Data: For each type of product.

B. Shop Drawings: For room-identification signs.

1. Include fabrication and installation details and attachments to other work.
2. Show sign mounting heights, locations of supplementary supports to be provided by other installers, and accessories.
3. Show message list, typestyles, graphic elements, including raised characters and Braille, and layout for each sign at least half size.

C. Samples for Initial Selection: For each type of sign assembly, exposed component, and exposed finish.

1. Include representative Samples of available typestyles and graphic symbols.

D. Samples for Verification: For each type of sign assembly showing all components and with the required finish(es), in manufacturer's standard size unless otherwise indicated and as follows:

1. Room-Identification Signs: Full-size Sample.
2. Exposed Accessories: Full-size Sample of each accessory type.
3. Full-size Samples, if approved, will be returned to Contractor for use in Project.

E. Product Schedule: For room-identification signs. Use same designations indicated on Drawings or specified.

1.6 INFORMATIONAL SUBMITTALS

A. Qualification Data: For manufacturer.

B. Sample Warranty: For special warranty.

1.7 CLOSEOUT SUBMITTALS

A. Maintenance Data: For signs to include in maintenance manuals.

1.8 QUALITY ASSURANCE

A. Installer Qualifications: Manufacturer of products.

1.9 FIELD CONDITIONS

A. Field Measurements: Verify locations of anchorage devices embedded in permanent construction by other installers by field measurements before fabrication and indicate measurements on Shop Drawings.

1.10 WARRANTY

A. Special Warranty: Manufacturer agrees to repair or replace components of signs that fail in materials or workmanship within specified warranty period.

1. Failures include, but are not limited to, the following:

a. Deterioration of finishes beyond normal weathering.
b. Deterioration of embedded graphic image.
c. Separation or delamination of sheet materials and components.

2. Warranty Period: Five years from date of Substantial Completion.

PART 2 - PRODUCTS

2.1 PERFORMANCE REQUIREMENTS

A. Accessibility Standard: Comply with applicable provisions in the USDOJ's "2010 ADA Standards for Accessible Design"] [the ABA standards of the Federal agency having jurisdiction and ICC A117.1.

2.2 ROOM-IDENTIFICATION SIGNS

A. Room-Identification Sign: Sign system with smooth, uniform surfaces; with message and characters having uniform faces, sharp corners, and precisely formed lines and profiles; and as follows:

1. Manufacturers: Subject to compliance with requirements, provide products by one of the following:

    a. Best Sign Systems, Inc.
    b. Mohawk Sign Systems.
    c. Seton Identification Products.

2. Laminated-Sheet Sign: Photopolymer face sheet with raised graphics laminated over subsurface graphics to acrylic backing sheet to produce composite sheet.

    a. Composite-Sheet Thickness: 0.125 inch (3.18 mm).
    b. Subsurface Graphics: Reverse etch image
    c. Color(s): As selected by Architect from manufacturer's full range and matching existing.

3. Sign-Panel Perimeter: Finish edges smooth.

    a. Edge Condition: Square cut.
    b. Corner Condition in Elevation: Rounded to radius indicated.

4. Mounting: Manufacturer's standard method for substrates indicated with two-face tape.
5. Text and Typeface: Accessible raised characters and Braille typeface matching existing and typeface as selected by Architect from manufacturer's full range. Finish raised characters to contrast with background color, and finish Braille to match background color.

2.3 SIGN MATERIALS

A. Acrylic Sheet: ASTM D 4802, category as standard with manufacturer for each sign, Type UVF (UV filtering).

B. Vinyl Film: UV-resistant vinyl film with pressure-sensitive, permanent adhesive; die cut to form characters or images as indicated on Drawings and suitable for exterior applications.

C. Paints and Coatings for Sheet Materials: Inks, dyes, and paints that are recommended by manufacturer for optimum adherence to surface and are UV and water resistant for colors and exposure indicated.

2.4 ACCESSORIES

A. Fasteners and Anchors: Manufacturer's standard as required for secure anchorage of signs, noncorrosive and compatible with each material joined, and complying with the following:

    1. Use concealed fasteners and anchors unless indicated to be exposed.

B. Two-Face Tape: Manufacturer's standard high-bond, foam-core tape, 0.045 inch (1.14 mm) thick, with adhesive on both sides.

2.5 FABRICATION

A. General: Provide manufacturer's standard sign assemblies according to requirements indicated.

1. Preassemble signs and assemblies in the shop to greatest extent possible. Disassemble signs and assemblies only as necessary for shipping and handling limitations. Clearly mark units for reassembly and installation; apply markings in locations concealed from view after final assembly.
2. Mill joints to a tight, hairline fit. Form assemblies and joints exposed to weather to resist water penetration and retention.

B. Subsurface-Applied Graphics: Apply graphics to back face of clear face-sheet material to produce precisely formed image. Image shall be free of rough edges.

2.6 GENERAL FINISH REQUIREMENTS

A. Protect mechanical finishes on exposed surfaces from damage by applying a strippable, temporary protective covering before shipping.

B. Appearance of Finished Work: Noticeable variations in same piece are not acceptable. Variations in appearance of adjoining components are acceptable if they are within the range of approved Samples and are assembled or installed to minimize contrast.

PART 3 - EXECUTION

3.1 INSTALLATION

A. General: Install signs using mounting methods indicated and according to manufacturer's written instructions.

1. Install signs level, plumb, true to line, and at locations and heights indicated, with sign surfaces free of distortion and other defects in appearance.
2. Install signs so they do not protrude or obstruct according to the accessibility standard.
3. Before installation, verify that sign surfaces are clean and free of materials or debris that would impair installation.

B. Accessibility: Install signs in locations on walls as indicated on Drawings and according to the accessibility standard.

C. Mounting Methods:

1. Two-Face Tape: Clean bond-breaking materials from substrate surface and remove loose debris. Apply tape strips symmetrically to back of sign and of suitable quantity to support weight of sign without slippage. Keep strips away from edges to prevent visibility at sign edges. Place sign in position, and push to engage tape adhesive.
2. weight of sign without slippage. Keep strips away from edges to prevent visibility at sign edges. Place sign in position.

3.2 ADJUSTING AND CLEANING

A. Remove and replace damaged or deformed signs and signs that do not comply with specified requirements. Replace signs with damaged or deteriorated finishes or components that cannot be successfully repaired by finish touchup or similar minor repair procedures.

B. Remove temporary protective coverings and strippable films as signs are installed.

C. On completion of installation, clean exposed surfaces of signs according to manufacturer's written instructions and touch up minor nicks and abrasions in finish. Maintain signs in a clean condition during construction and protect from damage until acceptance by Owner.

END OF SECTION 101423

This page intentionally left blank.

SECTION 260500 - COMMON WORK RESULTS FOR ELECTRICAL

PART 1 - GENERAL

1.1 RELATED DOCUMENTS

A. Drawings and general provisions of the Contract, including General and Supplementary Conditions and Division 0 & 1 Specification Sections, apply to this Section.

1.2 RELATED SECTIONS

A. Section 033000 for Concrete

1.3 REFERENCES

A. ACI 318 – Building Code Requirements for Reinforced Concrete

1.4 GENERAL

A. Nothing contained in these "SPECIFICATIONS" or shown on the "DRAWINGS" shall be so construed as to conflict with any local, municipal, or State laws or regulations governing the installation of electric or other work specified herein, and all such ordinances and regulations, including the National Electrical Code, are hereby incorporated and made a part of these specifications. All such requirements shall be satisfied by the Contractor and at no additional cost to the Owner.

B. General Requirements: Refer to Division 1 - Contract Modification Procedures, Payment Procedures, Administration Requirements, Field Offices and Storage Sheds, Vehicular Access and Parking, Public Safety, Temporary Barriers and Enclosures.

C. Provide structural steel members as required for support of equipment and materials furnished under this Division. Provide, for conduit, pipe, fixtures and associated equipment, all hangers and supports, as specified, detailed, or in accordance with industry standards.

D. Due to the small scale of drawings, it is not possible to indicate all conduits, conductors, boxes, fittings, switches, and similar parts that may be required. The contractor shall investigate the structural and finish conditions affecting the work and arrange all work accordingly furnishing such parts and equipment as may be required to meet building conditions. The Contract Drawings are diagrammatic and indicate the general arrangement of systems and work included in the Contract. Do not scale the drawings. Consult the Architectural Drawings and Details for the exact locations of equipment, where the same are not definitely located, obtain this information from the A/E.

E. Contractor shall lay out work from dimensions of architectural and structural drawings and actual dimensions of equipment being installed. Layouts in congested areas should not be scaled from mechanical or electrical drawings.

F. The Drawings are indicative of the character and scope of the work and are not intended to show all the details.

G. The actual location of all wiring, outlets, and equipment shall be determined at the site.

H. The Drawings shall be carefully checked to ensure that the equipment, as shown, will operate satisfactorily in the space allotted to it.

I. Generally, major equipment of the system is located on the floor plans and the interconnecting conduit and wiring are indicated on the diagrams or called for in the Specifications.

J. All work shall be manufactured, tested and installed in accordance with the latest version of the National Electrical Code (NEC) and all applicable local codes.

K. Thoroughly examine the Architectural and Mechanical Drawings prior to commencement of any work. Coordinate work with all other trades.

L. The Contractor shall visit the job site prior to bid date to examine the conditions under which his work is to be performed. No extras shall be allowed for failure to note existing conditions.

M. All electrical equipment shall be new, of first quality, and shall be furnished, delivered, erected, connected, and finished in every detail.

N. Only those materials and equipment named on the substitutions will not be acceptable unless determined to be in the best interest of the Owner

O. Contractor shall provide temporary lighting and power as required during construction.

P. Due to the small scale of the Drawings, it is not possible to indicate all raceway offsets, risers and drops, fittings, and accessories as may be required to meet such conditions.

Q. Refer to Architectural Specifications for additional conditions.

1.5 SHOP DRAWINGS, PRODUCT DATA AND SAMPLES

A. Submit under provisions of Division 1.

B. The acceptance of Shop Drawings shall not relieve the Contractor from responsibility to furnish material, equipment, and systems and to perform work required by the Contract Documents. Neither the Owner nor the Architect will be responsible for errors or omissions on Shop Drawings furnished by the Contractor even though such Shop Drawings containing errors or omissions are inadvertently accepted.

C. When the Contractor desires to furnish equipment of a manufacturer other than that specified or intended, he shall include a complete specification of the substituted item, along with each submission copy of shop drawings indicating the necessary modifications to the substituted product to satisfy the requirements of the contract specifications. Manufacturer’s specification shall be written as close as possible over the contract specifications and each paragraph shall bear the same paragraph number as the contract specifications so that close comparison can be made.

D. Include a listing and labeling statement for all submittals. All electrical materials, devices, appliances and equipment shall be labeled and listed by a certified laboratory or agency

1.6 REGULATIONS

A. All electrical work, equipment and material furnished or installed under this contract shall conform to the requirements of latest applicable codes and any other Governmental or Local Authorities having jurisdiction and all rules and regulations of the Utility Company involved. Nothing mentioned in the specifications or indicated on the drawings shall be construed to conflict with the mentioned codes, ordinances and regulations.

B. Absolutely no extra claim for compensation shall be allowed for changes necessitated by Code compliance regardless of how shown or specified, and the bidding Contractor hereby waives all his rights to such extra compensation.

C. All materials furnished and all work installed shall comply with the latest issue of the codes, rules, regulations, and recommendations of the following bodies, unless otherwise noted:

1. American Concrete Institute (ACI)
2. American National Standards Institute (ANSI)
3. American Society of Testing and Materials (ASTM)
4. International Building Code
5. International Energy Code
6. International Fire Code
7. International Electrical Code
8. Energy insulated Power Cable Engineer Associates (EPCEA)
9. Illuminating Engineering Society (IES)
10. Insulating Cable Engineer Association (ICEA)
11. Institute of Electrical and Electronic Engineers (IEEE)
12. National Electrical Code (NEC)
13. National Electrical Manufacturers Association (NEMA)
14. National Fire Protection Association (NFPA)
15. National Electrical Safety Code (NESC)
16. National Electrical Contractor’s Association (NECA)
17. Occupational Safety and Health Agency (OSHA)
18. Underwriters Laboratories, Inc. (UL)
19. National Board of Fire Underwriters
20. City or Local Code
21. Pennsylvania Department of Labor and Industry (L&I)
22. Pennsylvania Uniform Construction Code
23. American with Disabilities Act (ADA)

1.7 REFERENCES AND DEFINITIONS

A. Provide: Furnish and install.

B. Directed: Directed by the A/E

C. Indicated: Indicated in the Contract Documents.

D. Concealed: Hidden from normal sight. Includes items in shafts, pipe and duct spaces and above ceilings.

E. Exposed: Not concealed. Work within equipment rooms and all visible (normal sight) work shall be considered “exposed”.

1.8 PERMITS AND INSPECTIONS

A. Give all necessary notices and obtain all required permits. Pay all fees and other costs, including utility connections or extensions in connection with the work. File all necessary plans, prepare all documents and obtain all necessary approvals of all governmental agencies having jurisdiction. Obtain all required certifications of inspection and deliver same to the Architect.

1.9 DELIVERY, STORAGE AND HANDLING

A. Deliver, store, protect and handle all products to site under provisions of Division 1. Inspect all products for damage.

1.10 RECORD DRAWINGS

A. The Contractor shall keep accurate records of all deviations in work as actually installed from work indicated. One complete set of Contract Documents shall be available at the construction site for indicating said deviations. The Contractor shall indicate routing of all feeders over 2”, cable tray, large junction boxes and the like.

B. Provide a final set of hardcopy and electronic As-Built drawings to the owner at project final completion.

C. Post the project one-line diagram in the terminal building main electrical room and provide a complete set of as-built drawings in a 4” PVC tube attached to the wall in the main electrical room.

1.11 COORDINATION

A. Sequence, coordinate, and integrate installing electrical materials and equipment for efficient flow of the Work. Coordinate installing large equipment requiring positioning before closing in the building.

B. Where electrical identification devices are applied to field-finished surfaces, coordinate installation of identification devices with completion of finished surface.

C. Materials or labor obviously required to fully complete the work shall be included, even though each item necessarily involved is not specifically mentioned or shown. Such work and materials shall be furnished and shall be of the same grade or quality as the parts actually specified and shown. Should there be a conflict between the plans and Specifications, the greater quantity and better quality shall be provided.

D. Should an overlap of work between the various trades become evident, the Engineer shall be notified. Such an event shall not relieve the Contractor of the responsibility for

the work called for under this branch of the specifications until a written clarification or directive is issued concerning the matter.

E. Equipment Clearances and Requirements:

1. For many items of equipment described in these Specifications, several manufacturers are listed. The first named in each instance is the make on which the layout was based and on which clearances, service required electrical, and plumbing characteristics, etc., have been checked. Additional manufacturers listed are considered acceptable.
2. Due to the possibility of restrictions imposed by space limitations, the responsibility for resolving conflicts resulting from the use of equipment other than first named shall rest with the equipment supplier and the Contractor. Submittals for this equipment will be considered as a statement that clearances for access, service, maintenance, etc., have been checked and found adequate. Alternate equipment or the equipment of additional manufacturers named in these documents shall meet Base Bid Specifications. In the event such equipment or any equipment which the bidder proposes to furnish, deviates from the requirements of equipment first named regarding clearances, electric service, power wiring, control wiring, plumbing or piping, sound attenuation, ventilation, or vibration damping, it shall be the responsibility of the bidder to include in his price a sufficient sum to cover additional costs or charges resulting there from.

F. Where equipment is furnished by other trades for installation as Work under this Division, or where electrical connections to equipment installed by others, is indicated as Work of this Division, obtain installation instructions from the respective contractor prior to roughing-in.

G. Where equipment is indicated to be furnished as Work of this Division for installation by others, or where equipment furnished and installed under this Division requires connections or coordination by others, provide to the respective contractor(s) a copy of the installation instructions required for a complete installation.

1.12 DRAWINGS AND SPECIFICATIONS

A. Anything shown on the drawings and not mentioned in the specifications, or anything mentioned in the specifications and not shown on the drawings, shall be of like effect, as if shown or mentioned in both, and shall be furnished and installed by the Contractor.

B. Should any incidental work or materials be required but not set forth in the drawings and specifications, either directly or indirectly, but which is, nevertheless, necessary for the proper carrying out or completeness of the intent thereof, the Contractor is to understand same to be implied and required and he shall perform all such work and furnish all such materials as fully as if they were particularly described.

PART 2 - PRODUCTS

2.1 MATERIALS AND EQUIPMENT

A. All materials and equipment furnished for the project shall be new and of first quality, produced by manufacturers of recognized reputation for each line of material or equipment. The fact that materials or equipment offered are recently developed and untried may be sufficient justification for their rejection. All materials, fittings, devices and equipment shall be those approved by the Underwriters Laboratories, Inc., and if of the class for which the Underwriters Laboratories, Inc., provides label service, they shall bear such labels.

B. Where there is more than one item of equipment furnished under this Contract, the Contractor shall furnish equipment of the same type and from the same manufacturer. In no case shall the Contractor furnish similar types of equipment from different manufacturers. One manufacturer shall furnish all similar types of equipment.

C. Materials and equipment for patching and extending work: As specified in individual Sections.

PART 3 - EXECUTION

3.1 WORKMANSHIP

A. Each subcontractor shall furnish the services of an experienced superintendent who shall be constantly in charge of the installation of the work.

B. The quality of the workmanship required for each trade in the execution of its work shall be the finest and highest obtainable in that trade working with the materials specified. Workmanship shall be satisfactory to the Architect and his decision as to the acceptable quality is final.

C. Install all floor mounted equipment on 4” concrete housing pads or as indicated else ware on the drawings/specifications.

3.2 WATERPROOFING

A. Under no circumstances shall any waterproofing be damaged or penetrated. Should conditions arise which indicate such necessity, notify the Architect. Penetrations required by this Contract shall be made watertight.

3.3 CLEANING AND PAINTING

A. Conduit and Equipment to be installed: Clean thoroughly to remove plaster, splattered paint, cement and dirt, on both exterior and interior.

B. Conduit and Equipment to be Painted: Clean all conduit exposed to view in completed structure by removing plaster and dirt. Remove grease, oil and similar material from conduit and equipment by wiping with clean rags and suitable solvents in preparation for paint.

C. All Items With Factory Finish: Remove cement, plaster, grease and oil, and leave all surfaces, including cracks and corners, clean and polish. Touch up any scratched or

bare spots to match finish. The Architect may approve factory finish as prime coat. See "Painting" Section.

D. Electrical equipment and materials exposed to public and in finished areas shall be finish-painted after installation to coordinate with surrounding walls. Surfaces shall be thoroughly cleaned for receiving paint. Paint color coordination shall be as directed, and on adjacent surfaces to insure proper matching of quality and color with surrounding areas.

E. All electrical apparatus and equipment in equipment rooms shall be provided with a factory finish coat. All panels in public spaces, corridors, etc. shall be provided with a factory prime coat.

F. Site Cleaning: Remove from site all packing cartons, scrap materials, and other rubbish relating to electrical installation.

G. Concrete Work: All concrete work required for the installation of the work of this Division shall be performed as a part of the work of the appropriate section of this Division, in accordance with the applicable requirements of "Concrete" Division of the project specifications.

3.4 ELECTRICAL DEMOLITION

A. EXAMINATION

1. Verify field measurements and circuiting arrangements are as shown on Drawings.
2. Verify that abandoned wiring and equipment serve only abandoned facilities.
3. Demolition Drawings are based on casual field observation and existing record documents. Report discrepancies to A/E before disturbing existing installation
4. Beginning of demolition means installer accepts existing conditions.

B. PREPARATION

1. Disconnect electrical systems scheduled for removal.
2. Provide temporary wiring and connections to maintain existing systems in service during construction. When work must be performed on energized equipment or circuits use personnel experienced in such operations.
3. Existing Electrical Service: Maintain existing system in service until new system is complete and ready for service. Disable system only to make switchovers and connections. Obtain permission from Owner at least two weeks before partially or completely disabling system. Minimize outage duration. Make temporary connections to maintain service in areas adjacent to work area.
4. Provide a temporary standby generator system(s) to be parked at the building exterior to provide power to the building during the switchover from existing main switchboard to new main switchboard. Generator voltage and size to be per the drawings. Provide temporary switchgear, transformers, cabling and connections to maintain service to the building during outages. Distribution panels are identified on the drawings that require temporary power. The contractor shall provide a complete temporary power plan including but not limited to phasing,

proposed generator location(s), and identification on how to feed existing distribution panels.

C. DEMOLITION AND EXTENSION OF EXISTING ELECTRICAL WORK

1. Remove, relocate and extend existing installations to accommodate new construction.
2. Remove abandoned wiring to source of supply.
3. Remove exposed abandoned conduit, Cut conduit flush with grade.
4. Disconnect and remove abandoned control and distribution equipment.
5. Disconnect and remove electrical devices and equipment serving utilization equipment that has been removed.
6. Repair adjacent construction and finishes damaged during demolition and extension work.
7. Maintain access to existing electrical installations that remain active. Modify installation or provide access panel as appropriate.
8. Extend existing installations and circuits using materials and methods compatible with existing electrical installations or as specified.
9. Extend existing circuits to existing fixtures/devices scheduled to remain or for relocation.
10. Provide temporary support for equipment/devices scheduled.

D. CLEANING AND REPAIR

1. Clean and repair existing materials and equipment that remain or are to be reused.

E. Panelboards: Clean exposed surfaces and check tightness of electrical connections. Provide typed circuit directory showing revised circuiting arrangement. Install new blanks over exposed breaker spaces.

F. INSTALLATION

1. Install relocated materials and equipment under the provisions of Division 1.

END OF SECTION 260500

SECTION 260510 - ELECTRICAL ACCEPTANCE TESTING

PART 1 - GENERAL

1.1 RELATED DOCUMENTS

A. Drawings and general provisions of the Contract, including General and Supplementary Conditions and Division 0 & 1 Specification Sections, apply to this Section.

1.2 GENERAL

A. Testing shall be performed on electrical equipment and systems to assure that equipment and systems are operational and within applicable standards and manufacturer's tolerances. Testing should verify that equipment and systems are installed in accordance with design specifications. All testing shall occur at the building site.

B. Testing shall be performed by an independent organization that is professionally independent of the manufacturers, suppliers, and installers of the equipment or systems being evaluated. The name of the proposed testing organization shall be submitted to the Engineer for approval.

C. Qualified technicians who are trained and regularly employed for testing services shall do all testing. Submit technician qualifications.

D. The testing organization shall conform to the general guidelines of section 5 of the latest NETA Acceptance Testing Specifications, in their entirety. This includes the following:

1. Safety and Precautions
2. Suitability of Test Equipment
3. Test Instrument Calibration
4. Test Report

E. Inspection and testing of all applicable electrical equipment listed below shall be done in accordance with the latest version of NETA ATS. This will include all tests marked optional unless waived in writing the Engineer.

1. Switchboards
2. Transformers
3. Cables: Low Voltage Power
4. Low Voltage Surge Protection Devices

1.3 SYSTEM FUNCTION TESTS

A. Perform system function tests upon completion of equipment tests as defined in Article 1.2. It is the purpose of the system function tests to prove the correct interaction of all sensing, process, and action devices.

B. Verify the correct operation of all safety devices for fail-safe functions in addition to design function.

C. Verify the correct operation of all sensing devices, alarms, and indicating devices.

1.4 TRANSFORMERS, REACTORS, SWITCHBOARDS, PANELBORDS AND MOTOR CONTROL EQUIPMENT

A. Perform the following:

1. A continuity check and a 1,000 volt DC megger test shall be performed on distribution and isolation transformers, and on line reactors.
2. A 1,000 volt DC megger test shall be performed on buses, motor starters, circuit breakers, and disconnect switches. This test may be combined with the power cable megger test by testing the devices and terminated cables together.
3. A continuity check shall be performed on motor control circuits and control panel internal wiring.
4. An operational test shall be performed on the motor controls.
5. Motor heater sizes shall be checked for proper size. design intent.

PART 2 - PRODUCTS – NOT USED

PART 3 - EXECUTION

3.1 TESTING

A. Perform all testing functions as defined in Part 1 of this section and as specified in other Division 26, 27 and 28 sections.

END OF SECTION 260510

SECTION 260519 - LOW-VOLTAGE ELECTRICAL POWER CONDUCTORS AND CABLES

PART 1 - GENERAL

1.1 RELATED DOCUMENTS

A. Drawings and general provisions of the Contract, including General and Supplementary Conditions and Division 0 & 1 Specification Sections, apply to this Section.

1.2 SECTION INCLUDES

A. Building wire and cable.

B. Underground feeder and branch circuit cable.

C. Service entrance cable.

D. Wiring connector and connections.

1.3 RELATED SECTIONS

A. Section 260533 - Conduit

B. Section 260532 - Boxes

C. Section 260553 – Identification for Electrical Systems

1.4 REFERENCES

A. NEMA WC 3 - Rubber-Insulated Wire and Cable for the Transmission and Distribution of Electrical Energy

B. NEMA WC 5 - Thermoplastic-Insulated Wire and Cable for the Transmission and Distribution of Electrical

C. EPCEA S-68-516 - Ethylene-Propylene-Rubber- Insulated Wire and Cable

D. ANSI/NFPA 70 - National Electrical Code

1.5 SUBMITTALS

A. Shop Drawings, Product Data and Samples: Submit product data and samples under the provisions of Division 1.

B. Samples: All materials and devices used for making joints and splices shall be approved by samples, catalog designation or shop drawings.

PART 2 - PRODUCTS

2.1 BUILDING WIRE AND CABLE

A. Wire shall be manufactured by: Triangle/Plastic Wire and Cable (PWC) Co., Pirelli, Phelps Dodge, General Cable, Southwire, American Flexible Conduit or approved equal.

B. All conductors shall be of soft drawn copper having a conductivity of at least 98%. Conductors #8 and above shall be stranded, all wire and cable shall be single conductor type unless otherwise indicated. Conductors #12 and #10 shall be **solid.**

C. All conductors installed in interior raceways for power and lighting shall be Type THHN-THWN, 600 volts.

D. Branch circuit wiring for power and lighting circuits shall be not less than #12 AWG, and no smaller than #14 AWG for control wiring.

E. Conductors used in exterior raceways, exterior underground raceways, and as service entrance feeders shall be Type XHHW-2, 600 Volts.

F. Each bundle or reel of conductors shall bear the manufacturer's name and the Underwriters' label, together with the grade, size, length and manufacturing date. Similar information shall be included on the insulation jacket of the conductors.

G. For convenience in maintenance and testing, color coded “Green Wire” grounding and neutral wires will be used throughout the project. Phase wires may be color coded throughout their length or may be color coded by applied sleeves or tape at each splice and termination. Color coding shall conform to the following:

PHASE	120/208 Volt	277/480 Volt
A	Black	Brown
B	Red	Orange
C	Blue	Yellow
Neutral	White	White/Gray
Ground	Green	Green

PART 3 - EXECUTION

3.1 INSTALLATION OF WIRES AND CABLES

A. General: Install electrical cables, wires and wiring connectors as indicated, in compliance with applicable requirements of NEC, NEMA, UL and NECA’s “Standards of Installation”, and in accordance with recognized industry practices.

B. Pull conductors simultaneously where more than one is being installed in same raceway.

C. Use UL approved wire pulling lubricant, where necessary; compound used must not deteriorate conductor or insulation.

D. Use pulling means including, fish tape, cable, rope and basket weave wire/cable grips which will not damage cables or raceways.

E. Install exposed cable, parallel and perpendicular to surfaces, or exposed structural members, and follow surface contours, where possible.

F. Splices and terminations in wires #6 and larger shall be made with mechanical splicing devices and lugs, for wires #2 and larger shall be of a type in which the contact pressure on the wire is obtained by two or more screws or bolts and so designed that the failure of any one screw, bolt or nut will not result in a total loss on contact pressure. Mechanical splicing devices shall have insulation covers whenever obtainable, and shall otherwise be insulated with Scotch No. 33, Elastimold, or approved equal, plastic tape.

G. Splices in conductors #8 and smaller shall be made with solderless pressure connectors consisting of cone shaped coiled springs with insulation covers, similar to Scotch "Scotclok"; crimped sleeved conductors, T & B Color Keyed Line, with nylon insulating covers; or Ideal Series 450, with nylon sheath containing wingnuts.

H. The termination of solid wires No. 10 and smaller wires shall be made by forming the wires about the terminal screws, all stranded wires shall be provided with spade lugs attached to the wires by a crimped sleeve.

I. Use splice and tap connectors which are compatible with conductor material.

J. Tighten electrical connectors and terminals, including screws and bolts, in accordance with manufacturer's published torque tightening values. Where manufacturer's torqueing requirements are not indicated, tighten connectors and terminals to comply with tightening torques specified in UL Std 486A and B.

K. Use conductor not smaller than 12 AWG for power and lighting circuits.

L. Support cables above accessible ceiling, using spring metal clips or plastic cable ties to support cables from structure or ceiling suspension system. Do not rest cable on ceiling panels.

M. Use suitable cable fittings and connectors.

N. Use #10 AWG conductors for all 20 ampere, 120 volt circuit runs greater than 50’-0” one way from panel board to first outlet, and 20 ampere, 277 volt circuit runs longer than 150 feet.

O. The installation of wire and cable shall be sufficiently perfect to provide a minimum insulation resistance between conductors, and between conductors and ground of that required by the National Electric Code.

3.2 TESTING

A. Make voltage and megger tests of all circuits and shall notify the Engineer, in writing, as to the results of the tests. Conductor insulation shall have the following minimum resistance:

1.	15 to 20 amps inclusive -	1,000,000 ohms
	20 to 50 amps inclusive -	250,000 ohms
	51 to 100 amps inclusive -	100,000 ohms
	101 to 200 amps inclusive -	50,000 ohms
	201 to 400 amps inclusive -	25,000 ohms
	401 to 800 amps inclusive -1	2,000 ohms

B. All of the testing work shall be done when and as directed by the Engineer before the system is accepted.

3.3 PHASE LOAD BALANCE

A. A reasonable balance shall be secured on the three phases of all distribution feeders and bus bars.

B. Following installation and with the system in operation, the Contractor shall check the balance and rearrange connections in order that the kilowatt demand on each of the three phases of each main bus shall not vary more than ten percent from each other.

3.4 FIELD QUALITY CONTROL

A. Prior to energization of circuitry, check installed wires and cables with megohm meter to determine insulation resistance levels to ensure requirements are fulfilled.

B. Prior to energization, test wires and cables for electrical continuity and for short-circuits.

END OF SECTION 260519

SECTION 260526 - GROUNDING AND BONDING FOR ELECTRICAL SYSTEMS

PART 1 - GENERAL

1.1 RELATED DOCUMENTS

A. Drawings and general provisions of the Contract, including General and Supplementary Conditions and Division 0 & 1 Specification Sections, apply to this Section.

1.2 SECTION INCLUDES

A. Grounding electrodes and conductors.

B. Equipment grounding conductors.

C. Bonding.

1.3 REFERENCES

A. ANSI/NFPA 70 - National Electrical Code

1.4 SUBMITTALS

A. Submit under provisions of Division 1.

B. Product Data: Provide data for grounding electrodes and connections.

C. Test Reports: Indicate overall resistance to ground and resistance of each electrode.

D. Manufacturer's Instructions: Include instructions for storage, handling, protection, examination, preparation and installation of exothermic connectors.

PART 2 - PRODUCTS

2.1 MANUFACTURERS

A. Rod Electrode:

1. Erico
2. Harger
3. LGS

B. Mechanical Connectors:

1. Thomas & Betts
2. Ilsco
3. Burndy
4. Amp

C. Exothermic Connections:

1. Cadweld

2.2 GROUNDING CONDUCTORS

A. For insulated conductors, comply with Division 26 Section "Conductors and Cables."

B. Material: Copper

C. Equipment Grounding Conductors: Insulated with green-colored insulation.

D. Grounding Electrode Conductors: Stranded cable.

E. Underground Conductors: Bare stranded.

F. Bare copper conductors shall comply with the following:

1. Solid Conductors: ASTM B 3.
2. Assembly of Stranded Conductors: ASTM B 8.
3. Tinned Conductors: ASTM B 33.

G. Copper Bonding Conductors: As follows:

1. Bonding Cable: 28 kcmil, 14 strands of No. 17 AWG copper conductor, 1/4 inch in diameter.
2. Bonding Conductor: No. 4 or No. 6 AWG, stranded copper conductor.
3. Bonding Jumper: Bare copper tape, braided bare copper conductors, terminated with copper ferrules; 1-5/8 inches wide and 1/16 inch thick.
4. Ground Conductor and Conductor Protector for Wood Poles: As follows:

    a. No. 4 AWG minimum, soft-drawn copper conductor.
    b. Conductor Protector: Half-round PVC or wood molding. If wood, use pressure-treated fir, or cypress or cedar.

H. Grounding Bus: Bare, annealed copper bars of rectangular cross section, with insulators.

2.3 CONNECTOR PRODUCTS

A. Comply with IEEE 837 and UL 467; listed for use for specific types, sizes, and combinations of conductors and connected items.

B. Bolted Connectors: Bolted-pressure-type connectors, or compression type.

C. Welded Connectors: Exothermic-welded type, in kit form, and selected per manufacturer's written instructions.

2.4 GROUNDING ELECTRODES

A. Ground Rods: Sectional type; copper-clad steel.

B. Size: 3/4 by 120 inches in length.

C. Bolted Connectors: Bolted-pressure type connectors or compression type.

PART 3 - EXECUTION

3.1 APPLICATION

A. Use only copper conductors for both insulated and bare grounding conductors in direct contact with earth, concrete, masonry, crushed stone, and similar materials.

B. In raceways, use insulated equipment grounding conductors.

C. Exothermic-Welded Connections: Use for connections to structural steel and for underground connections, except those at test wells.

D. Equipment Grounding Conductor Terminations: Use bolted pressure clamps.

E. Grounding Bus: Install in electrical and telephone equipment rooms, in rooms housing service equipment, and elsewhere as indicated.

1. Use insulated spacer; space 1 inch from wall and support from wall 6 inches above finished floor, unless otherwise indicated.
2. At doors, route the bus up to the top of the door frame, across the top of the doorway, and down to the specified height above the floor.

F. Underground Grounding Conductors: Use tinned-copper conductor, No. 4/0 AWG minimum. Bury at least 24 inches below grade or bury 12 inches above duct bank when installed as part of the duct bank.

3.2 EQUIPMENT GROUNDING CONDUCTORS

A. Comply with NFPA 70, Article 250, for types, sizes, and quantities of equipment grounding conductors, unless specific types, larger sizes, or more conductors than required by NFPA 70 are indicated.

B. Install equipment grounding conductors in all feeders and circuits. Ground conductors shall be run through conduit and shall be securely bonded to such conduit at both entrance and exit. All connections to equipment or conduit shall be made with an approved type solderless connector, and it shall be bolted or clamped and bright before connection is made so as to insure a good metal-to-metal contact.

C. Install insulated equipment grounding conductor with circuit conductors for the following items, in addition to those required by NEC:

1. Feeders and branch circuits.
2. Receptacle circuits.
3. Single-phase motor and appliance branch circuits.
4. Three-phase motor and appliance branch circuits.
5. Flexible raceway runs.

D. Nonmetallic Raceways: Install an equipment grounding conductor in nonmetallic raceways unless they are designated for telephone or data cable drops.

3.3 INSTALLATION

A. Ground Bus Connections and Identification:

1. Exothermically weld the grounding connection at the Main Ground Bus (MGB) from the Service Equipment Ground bus.
2. All other MGB connections shall be Bolted.
3. Provide an engraved nameplate permanently mounted on conductor identifying circuit for all connections at the Main Ground Bus.

B. Ground Rods:

1. Drive ground rods until tops are 2 inches below finished floor or final grade, unless otherwise indicated.
2. Interconnect ground rods with grounding electrode conductors. Use exothermic welds, except at test wells and as otherwise indicated. Make connections without exposing steel or damaging copper coating.
3. Verify that final backfill and compaction has been completed before driving electrodes.

C. Grounding Conductors: Route along shortest and straightest paths possible, unless otherwise indicated. Avoid obstructing access or placing conductors where they may be subjected to strain, impact, or damage.

D. Bonding Straps and Jumpers: Install so vibration by equipment mounted on vibration isolation hangers and supports is not transmitted to rigidly mounted equipment. Use exothermic-welded connectors for outdoor locations, unless a disconnect-type connection is required; then, use a bolted clamp. Bond straps directly to the basic structure taking care not to penetrate any adjacent parts. Install straps only in locations accessible for maintenance.

E. Water Meter Piping: Use braided-type bonding jumpers to electrically bypass interior water meters. Connect to pipe with rigid grounding clamp jaw connectors.

F. Bond interior metal piping systems and metal air ducts to equipment grounding conductors of associated pumps, fans, blowers, electric heaters, and air cleaners. Use braided-type bonding straps.

3.4 CONNECTIONS

A. General: Make connections so galvanic action or electrolysis possibility is minimized. Select connectors, connection hardware, conductors, and connection methods so metals in direct contact will be galvanically compatible.

1. Use electroplated or hot-tin-coated materials to ensure high conductivity and to make contact points closer to order of galvanic series.
2. Make connections with clean, bare metal at points of contact.
3. Make aluminum-to-steel connections with stainless-steel separators and mechanical clamps.
4. Make aluminum-to-galvanized steel connections with tin-plated copper jumpers and mechanical clamps.

5. Coat and seal connections having dissimilar metals with inert material to prevent future penetration of moisture to contact surfaces.

B. Exothermic-Welded Connections: All underground connections shall be exothermic welded type. Comply with manufacturer's written instructions. Welds that are puffed up or that show convex surfaces indicating improper cleaning are not acceptable.

C. Equipment Grounding Conductor Terminations: For No. 8 AWG and larger, use pressure-type grounding lugs. No. 10 AWG and smaller grounding conductors may be terminated with winged pressure-type connectors.

D. Noncontact Metal Raceway Terminations: If metallic raceways terminate at metal housings without mechanical and electrical connection to housing, terminate each conduit with a grounding bushing. Connect grounding bushings with a bare grounding conductor to grounding bus or terminal in housing. Bond electrically noncontinuous conduits at entrances and exits with grounding bushings and bare grounding conductors, unless otherwise indicated.

E. Tighten screws and bolts for grounding and bonding connectors and terminals according to manufacturer's published torque-tightening values. If manufacturer's torque values are not indicated, use those specified in UL 486A.

F. Compression-Type Connections: Use hydraulic compression tools to provide correct circumferential pressure for compression connectors. Use tools and dies recommended by connector manufacturer. Provide embossing die code or other standard method to make a visible indication that a connector has been adequately compressed on grounding conductor.

G. Moisture Protection: If insulated grounding conductors are connected to ground rods or grounding buses, insulate entire area of connection and seal against moisture penetration of insulation and cable.

3.5 FIELD QUALITY CONTROL

A. Testing: Engage a qualified testing agency to perform the following field quality-control testing:

1. After installing grounding system but before permanent electrical circuitry has been energized, test for compliance with requirements.
2. Test completed grounding system at each location where a maximum ground-resistance level is specified, at service disconnect enclosure grounding terminal, and at ground test wells. Measure ground resistance not less than two full days after the last trace of precipitation, and without the soil being moistened by any means other than natural drainage or seepage and without chemical treatment or other artificial means of reducing natural ground resistance. Perform tests, by the fall-of-potential method according to IEEE 81.
3. Provide drawings locating each ground rod and ground rod assembly and other grounding electrodes, identify each by letter in alphabetical order, and key to the record of tests and observations. Include the number of rods driven and their depth at each location and include observations of weather and other

phenomena that may affect test results. Describe measures taken to improve test results.

a. Equipment Rated 500 kVA and Less: 5 ohms.
b. Equipment Rated 500 to 1000 kVA: 5 ohms.
c. Equipment Rated More Than 1000 kVA: 3 ohms.
d. Substations and Pad-Mounted Switching Equipment: 5 ohms.
e. Manhole Grounds: 10 ohms.

4. Excessive Ground Resistance: If resistance to ground exceeds specified values, add additional ground rods as required to achieve specified resistance. Notify Architect promptly and include recommendations to reduce ground resistance.
5. Inspect grounding and bonding system conductors and connections for tightness and proper installation.

END OF SECTION 260526

SECTION 260529 - HANGERS AND SUPPORTS FOR ELECTRICAL SYSTEMS

PART 1 - GENERAL

1.1 RELATED DOCUMENTS

A. Drawings and general provisions of the Contract, including General and Supplementary Conditions and Division 0 & 1 Specification Sections, apply to this Section.

1.2 SECTION INCLUDES

A. Conduit and equipment supports.

B. Anchors and fasteners.

1.3 REFERENCES

A. NECA - National Electrical Contractors Association.

B. ANSI/NFPA 70 - National Electrical Code.

1.4 SUBMITTALS

A. Submit under provisions of Division 1.

B. Product Data: Provide manufacturer's catalog data for fastening systems.

C. Manufacturer's Instructions: Indicate application conditions and limitations of use stipulated by Product testing agency specified under Regulatory Requirements. Include instructions for storage, handling, protection, examination, preparation, installation, and starting of Product.

PART 2 - PRODUCTS

2.1 PRODUCT REQUIREMENTS

A. Materials and Finishes: Provide adequate corrosion resistance.

B. Provide materials, sizes, and types of anchors, fasteners and supports to carry the loads of equipment and conduit. Consider weight of wire in conduit when selecting products.

C. Safe Working Load: Shall not exceed $^1/_4$ of proof test load of fastening devices and wiring.

D. Anchors and Fasteners:

1. Concrete Structural Elements: Use precast insert system, expansion anchors, and preset inserts.
2. Steel Structural Elements: Use beam clamps.
3. Concrete Surfaces: Use expansion anchors and preset inserts.

4. Hollow Masonry, Plaster, and Gypsum Board Partitions: Use toggle bolts or hollow wall fasteners.
5. Solid Masonry Walls: Use expansion anchors and preset inserts.
6. Sheet Metal: Use sheet metal screws, machine screws, bolts and welded studs.
7. Wood Elements: Use wood screws.
8. Trapeze Hangers: Designed to support a load equal to or greater than the sum of the weights of the conduits, wires, hanger itself, and 200 pounds.

2.2 STEEL CHANNEL

A. Manufacturer:

1. Kindorf
2. B-Line
3. Unistrut
4. Approved equal.

B. Description: Stainless steel.

PART 3 - EXECUTION

3.1 INSTALLATION

A. Install products in accordance with manufacturer's instructions.

B. Provide anchors, fasteners, and supports in accordance with NECA "Standard of Installation".

C. Do not fasten supports to pipes, ducts, mechanical equipment, and conduit.

D. Do not use spring steel clips and clamps.

E. Do not use powder-actuated anchors without specific permission from A/E.

F. Do not drill or cut structural members.

G. Fabricate supports from structural steel or steel channel. Rigidly weld members or use hexagon head bolts to present neat appearance with adequate strength and rigidity. Use spring lock washers under all nuts.

H. Install surface-mounted cabinets and panelboards with minimum of four anchors.

I. In wet and damp locations use steel channel supports to stand cabinets and panelboards 1” off wall.

J. Use sheet metal channel to bridge studs above and below cabinets and panelboards recessed in hollow partitions.

K. Layout supports to maintain headroom, neat mechanical appearance, and to support equipment loads required.

L. Attachments by wood plugs, rawl plug, plastic, lead, soft metal anchors or wood blocking is not permitted.

M. The use of plumbers perforated straps will not be permitted.

N. Vertical conduit runs shall have riser clamps and supports in accordance with the NEC and as shown on the drawings. Supports for cables and wire shall have fittings which include internal wedges and retaining collars.

O. Multiple conduit runs shall be supported by trapeze hangers. Each conduit shall be attached by U-bolt or other approved fastener.

P. Conduit shall be supported independently of junction boxes, pull boxes, fixtures, suspended ceiling T-bars, angle supports, etc.

END OF SECTION 260529

This page intentionally left blank.

SECTION 260532 - BOXES

PART 1 - GENERAL

1.1 RELATED DOCUMENTS

A. Drawings and general provisions of the Contract, including General and Supplementary Conditions and Division 0 & 1 Specification Sections, apply to this Section.

1.2 SECTION INCLUDES

A. Surface outlet boxes.

B. Pull and junction boxes

1.3 RELATED SECTIONS

A. Section 260553 - Identification for Electrical Systems.

B. Section 260533 - Conduit.

1.4 REFERENCES

A. NEMA 250 - Enclosures for Electrical Equipment (1000 Volts Maximum)

1.5 SUBMITTALS

A. Submittals:

1. Product Data: Submit product data under the provisions of Division 1.

PART 2 - PRODUCTS

2.1 OUTLET BOXES

A. Cast Boxes: Cast feralloy or aluminum, deep type, gasketed cover, threaded hubs.

B. Exterior Boxes: Cast metal weatherproof with grounding terminal, threaded hubs and gaskets.

C. Boxes On Exposed Conduit Installation: Shall be cast deep threaded type, cadmium plated of size to accommodate wiring devices installed at the outlet.

D. Surface Mounted On Ceiling: Boxes shall be cast, 4” round, deep, threaded type with four tapped holes with two close-up plugs and mounting lugs. Boxes shall be type to receive four or less $^{3}/_{4}$” conduits.

2.2 PULL AND JUNCTION BOXES.

A. Cast Metal Boxes for Outdoor and Wet Location Installations: NEMA 250; Type 4 and Type 6, flat-flanged, surface-mounted junction box, UL listed as rain tight. Galvanized cast iron or cast aluminum box and cover with ground flange, neoprene gasket and stainless steel cover screws.

B. Cast Metal Boxes for Underground Installations: NEMA 250; Type 4, outside or inside flanged, recessed cover box for flush mounting, UL listed as rain tight. Galvanized cast iron or cast aluminum box and plain cover with neoprene gasket and stainless steel cover screws.

2.3 MATERIALS

A. Pull Boxes and Junction Boxes: 12 gauge galvanized steel metal construction of such design, construction and dimensions as to best adapt to their respective location, number, size and arrangement of conduit connecting thereto, conforming to the National Electrical Code, with screw-on or hinged cover.

B. Flush Mounted Pullboxes: Provide overlapping covers with flush-head cover retaining screws, prime coated. Surface mounted or exposed pullboxes and junction boxes shall be cast type.

PART 3 - EXECUTION

3.1 COORDINATION OF BOX LOCATIONS

A. Provide electrical boxes as shown on Drawings, and as required for splices, wire pulling, equipment connections and code compliance. Electrical box locations shown on Contract Drawings are approximate unless dimensioned. Verify location of floor boxes and outlets prior to rough-in. Locate and install boxes to allow access.

3.2 OUTLET BOX INSTALLATION

A. Do not install boxes back-to-back in walls. Provide minimum 6” separation, except provide minimum 24” separation when installing boxes in acoustical-rated walls. Locate boxes in masonry walls to require cutting of masonry unit corner only. Coordinate masonry cutting to achieve neat opening for boxes.

B. Provide knockout closure for unused openings. Support boxes independently of conduit, except for cast boxes that are connected to two rigid metal conduits, both supported within 12” of box. Use multiple-gang boxes where more than one device is mounted together; do not use sectional boxes. Provide barriers to separate wiring of different voltage systems.

C. Install boxes in walls without damaging wall insulation. Coordinate mounting heights and locations of outlets mounted above counters, benches and backsplashes. Position the outlets to locate luminaries as shown on reflected ceiling plans. In inaccessible ceiling areas, position outlet boxes within 6” of recessed luminaire, to be accessible through

ceiling opening. Provide recessed outlet boxes in finished areas; secure boxes to interior wall and partition studs, accurately positioning to allow for surface finish thickness. Use stamped steel stud bridges for flush outlet in hollow stud wall and adjustable steel channel fasteners for flush ceiling outlet boxes Align wall-mounted outlet boxes for switches, thermostats and similar devices. Provide cast outlet boxes in exterior locations and wet locations.

3.3 PULL AND JUNCTION BOX INSTALLATION

A. Locate pull boxes and junction boxes above accessible ceilings or in unfinished areas.

B. Support pull and junction boxes independent of conduit. Provide pullboxes at least every 100'-0" of run, or as may be required to facilitate the pulling of wires.

END OF SECTION 260532

This page intentionally left blank.

SECTION 260533 - CONDUIT

PART 1 - GENERAL

1.1 RELATED DOCUMENTS

A. Drawings and general provisions of the Contract, including General and Supplementary Conditions and Division 0 & 1 Specification Sections, apply to this Section.

1.2 SECTION INCLUDES

A. Metal conduit.

B. Flexible metal conduit.

C. Liquid-tight flexible metal conduit.

D. Electrical metallic tubing.

E. Nonmetal conduit.

F. Fittings and conduit bodies.

1.3 RELATED SECTIONS

A. Division 7 Section - Fire Stopping.

B. Section 260526 - Grounding and Bonding for Electrical Systems.

C. Section 260529 - Hangers and Supports for Electrical Systems.

D. Section 260553 - Identification for Electrical Systems.

1.4 REFERENCES

A. ANSI C80.1 - Rigid Steel Conduit, Zinc Coated.

B. ANSI C80.3 - Electrical Metallic Tubing, Zinc Coated.

C. ANSI/NEMA FB 1 - Fittings, Cast Metal Boxes and Conduit Bodies for Conduit and Cable Assemblies.

D. ANSI/NFPA 70 - National Electrical Code.

E. NECA "Standard of Installation”.

F. "NEMA RN 1 - Polyvinyl Chloride (PVC) Externally Coated Galvanized Rigid Steel Conduit and Intermediate Metal Conduit.

G. NEMA TC 2 - Electrical Plastic Tubing (EPT) and Conduit (EPC-40 and EPC-80).

H. NEMA TC 3 - PVC Fittings for Use with Rigid PVC Conduit and Tubing.

1.5 SUBMITTALS

A. Submit under provisions of Division 1.

B. Product Data: Provide for metallic conduit, flexible metal conduit, liquid-tight flexible metal conduit, metallic tubing, nonmetallic conduit, flexible nonmetallic conduit, nonmetallic tubing, fittings and conduit bodies.

PART 2 - PRODUCTS

2.1 CONDUIT REQUIREMENTS

A. Minimum size of conduit shall be $^{3}/_{4}$". Size shall be in accordance with the NEC, but not less than shown on the drawings.

B. Outdoors:

1. Exposed: Rigid Galvanized Steel or IMC.
2. Concealed: Rigid Steel or IMC.
3. Underground, Single Run: RNC.
4. Underground, Grouped: RNC.
5. Connection to Vibrating Equipment (Including Transformers and Hydraulic, Pneumatic, Electric Solenoid, or Motor-Driven Equipment): LFMC.

C. Indoors:

1. Exposed: EMT 10' above finished floor and above, IMC otherwise.
2. Concealed: EMT.
3. Connection to Vibrating Equipment (Including Transformers and Hydraulic, Pneumatic, Electric Solenoid, or Motor-Driven Equipment): FMC; except use LFMC in damp or wet locations.
4. Damp or Wet Locations: Rigid steel conduit.
5. Concealed in Concrete-filled Block Walls: IMC
6. Medium Voltage Cable Circuits/Feeders: Rigid Galvanized Steel

D. Utilize rigid polyvinyl chloride (PVC), Type 40 conduit, for exterior underground applications.

E. Flexible metal conduit shall be used for final connections to equipment and lighting fixtures. Connections shall not exceed 3'-0" for equipment and 6'-0" for light fixtures.

F. Coordinate installation of conduit in masonry work. Install conduit concealed in new walls excluding mechanical rooms, connections to motors and connections to surface cabinets.

2.2 METAL CONDUIT

A. Rigid Steel Conduit: ANSI C80.

B. Rigid Aluminum Conduit: ANSI C80.5

C. Intermediate Metal Conduit (IMC): Rigid steel.

D. Fittings and Conduit Bodies: ANSI/NEMA FB 1; threaded type, material to match conduit.

2.3 PVC COATED METAL CONDUIT

A. Description: NEMA RN 1; rigid steel conduit with external PVC coating, 40 mil thick.

B. Fittings and Conduit Bodies: ANSI/NEMA FB 1; steel fittings with external PVC coating to match conduit.

2.4 FLEXIBLE METAL CONDUIT

A. Description: Interlocked steel construction.

B. Fittings: ANSI/NEMA FB 1.

2.5 LIQUID-TIGHT FLEXIBLE METAL CONDUIT

A. Description: Interlocked steel construction with PVC jacket.

B. Fittings: ANSI/NEMA FB 1.

2.6 ELECTRICAL METALLIC TUBING (EMT)

A. Description: ANSI C80.3; galvanized tubing.

B. Fittings and Conduit Bodies: ANSI/NEMA FB 1; Steel compression type for 2” and below. Steel set screw type for 2.5” and above.

C. Do not use with cable rated above 600 volts.

2.7 NONMETALLIC CONDUIT

A. Description: NEMA TC 2; Schedule 40 PVC.

B. Fittings and Conduit Bodies: NEMA TC 3.

PART 3 - EXECUTION

A. INSTALLATION

B. Install nonmetallic conduit in accordance with manufacturer's instructions.

C. Arrange supports to prevent misalignment during wiring installation.

D. Support conduit using coated steel or malleable iron straps, lay-in adjustable hangers, clevis hangers and split hangers.

E. Group related conduits; support using conduit rack. Construct rack using steel channel; provide space on each for 25% additional conduits.

F. Fasten conduit supports to building structure and surfaces under provisions of Division 26 Section Hangers and Supports for Electrical Systems. Do not support conduit with wire or perforated pipe straps. Remove wire used for temporary supports

G. Do not attach conduit to ceiling support wires.

H. Arrange conduit to maintain headroom and present neat appearance.

I. Route exposed conduit parallel and perpendicular to walls.

J. Route conduit installed above accessible ceilings parallel and perpendicular to walls.

K. Do not install conduit in concrete slabs. Conduit is to be laid in the stone base under the concrete slabs or under metal deck.

L. Horizontal runs of conduit are not permitted in walls or partitions.

M. Maintain adequate clearance between conduit and piping.

N. Maintain 12” clearance between conduit and surfaces with temperatures exceeding 104° F.

O. Join nonmetallic conduit using cement as recommended by manufacturer. Wipe nonmetallic conduit dry and clean before joining. Apply full even coat of cement to entire area inserted in fitting. Allow joint to cure for 20 minutes, minimum.

P. Use conduit hubs to fasten conduit to sheet metal boxes in damp and wet locations and to cast boxes.

Q. Install no more than equivalent of four 90-degree bends between boxes. Use conduit bodies to make sharp changes in direction, as around beams. Use hydraulic one-shot bender or factory elbows for bends in metal conduit larger than 2” size.

R. Avoid moisture traps; provide junction box with drain fitting at low points in conduit system.

S. Provide suitable fittings to accommodate expansion and deflection where conduit crosses control and expansion joints.

T. All empty conduit shall be provided with No. 12 gauge, 200lb. galvanized fish wire with 12” free at each end.

U. Use suitable caps to protect installed conduit against entrance of dirt and moisture.

V. Ground and bond conduit under provisions of Division 26 Section “Grounding and Bonding”.

W. Identify conduit under provisions of Division 26 Section “Electrical Identification”. Raceways passing from heated to unheated spaces, interior to exterior, through refrigerated spaces or cold section plenums of air conditioning units, etc. shall be suitably sealed with Polywater FST-250”, sealing fittings, etc. to prevent condensation and water penetration into the building.

X. Maintain minimum of 2” spacing between conduit and roof decking where conduit is running below decking and parallel to roof.

3.2 INTERFACE WITH OTHER PRODUCTS

A. Install conduit to preserve fire resistance rating of partitions and other elements, using materials and methods under the provisions of Division 7.

END OF SECTION 260533

This page intentionally left blank.

SECTION 260553 - IDENTIFICATION FOR ELECTRICAL SYSTEMS

PART 1 - GENERAL

1.1 RELATED DOCUMENTS

A. Drawings and general provisions of the Contract, including General and Supplementary Conditions and Division 0 & 1 Specification Sections, apply to this Section.

1.2 SECTION INCLUDES

A. Nameplates and tape labels.

B. Wire and cable markers and tags.

C. Conduit color coding.

1.3 RELATED SECTIONS

A. Division 9 Section “Painting”.

1.4 REFERENCES

A. ANSI/NFPA - 70 National Electrical Code.

1.5 SUBMITTALS

A. Shop Drawings: Submit under provisions of Division 1.

B. Include schedule for nameplates and tape labels.

PART 2 - PRODUCTS

2.1 NAMEPLATES AND LABELS

A. Name Plates: Engraved three-layer laminated plastic, with $^{1}/_{2}$” high "WHITE" letters on "BLACK" background.

B. Tape Labels: Embossed adhesive tape, with $^{3}/_{16}$” high "WHITE" letters on "BLACK" background.

2.2 WIRE MARKERS

A. Description: cloth, tape, split sleeve or tubing type wire markers.

B. Locations: Each conductor at panelboard gutters, pull boxes and each load connection.

2.3 POWER FEEDER IDENTIFICATION (0 volts - 600 V)

A. Provide identification for all power feeders to include the following:

1. Where served from.
2. Serving.
3. Phase conductor size.
4. Neutral conductor size.
5. Ground conductor size.

The information shall be $^1/_2$" high (painted) stenciled letters marked at the beginning and end and at 50' intervals on the conduit run where accessible. The information shall be marked on all pull boxes the feeder passes through.

PART 3 - EXECUTION

3.1 INSTALLATION

A. Degrease and clean surfaces to receive nameplates and/or tape labels.

B. Install nameplates and/or tape labels parallel to equipment lines.

C. Secure nameplates to equipment fronts using screws, rivets or adhesive. Secure nameplates to inside face of recessed panelboard doors in finished locations.

D. Use embossed tape only for identification of individual wall switches and receptacles and control device stations.

E. Where electrical identification devices are applied to field-finished surfaces, coordinate installation of identification devices with completion of finished surface.

F. Where acoustical ceilings and similar finishes will conceal electrical identification markings and devices, coordinate installation of these items before ceiling installation.

3.2 WIRE IDENTIFICATION

A. Provide wire markers on each conductor in panelboard gutters, pull boxes, outlet and junction boxes, and at load connection. Identify with branch circuit or feeder number for power and lighting circuits, and with control wire number as equipment manufacturer's shop drawings for control wiring.

B. Provide a 1" wide band of colored tape or brilliant waterproof lacquer on ends of each conductor #6 AWG and larger, and on all conductors not furnished factory colored coded.

C. Nonferrous identifying tags of pressure-sensitive labels shall be securely fastened to all cables, feeders and power circuits in vaults, pullboxes, manholes, switchboard rooms, termination of cables, etc. Tags or labels shall be marked so that feeder or cable may be readily identified. If suspended type tags are provided, they shall be attached by approximately $^1/_3$ 2" diameter nylon 55-pound test monofilament line attached to tag, using three twist, clinch knot of especially designed slip-free plastic cable lacing unit.

END OF SECTION 260553

SECTION 260573 - OVERCURRENT PROTECTIVE DEVICE COORDINATION

PART 1 - GENERAL

1.1 RELATED DOCUMENTS

A. Drawings and general provisions of the Contract, including General and Supplementary Conditions and Division 0 & 1 Specification Sections, apply to this Section.

1.2 GENERAL

A. The power system studies in this section are required to confirm the adequacy of the ratings of all circuit breakers. These studies shall not be used as a basis to compromise the electrical system and do not imply that short circuit ratings of distribution equipment and devices may be lower than those indicated on the drawings or specified herein.

B. Coordination Study shall start at the Penelec Primary 4160v connection point, through the existing main terminal 4160v switchgear and include all existing and new work on drawing E-301.

C. Arc Flash labeling shall only be required for new distribution equipment and as noted on the drawings.

D. Coordination settings for the new Main Distribution Switchboard shall be set by the contractor based on the coordination study.

E. The contractor shall gather all existing data required for the existing system study including but not limited to switchboard/panelboard amperages/AIC ratings, breaker sizes, fuse sizes, feeder size/lengths.

1.3 SECTION INCLUDES

A. This section includes computer-based, fault-current and overcurrent protective device coordinate studies, and the setting of these devices.

B. This Contractor and associated manufacturers will be required to cooperate with other Contractors, and shall provide all necessary information, curves and data for the equipment furnished under this Contract including the following.

1. A fault current and system protective device coordination study, including the short circuit duties on the 480-volt systems as defined above.
2. A complete study of coordination curves, starting devices protecting feeder, subfeeder, and secondary mains and branch circuit devices.
3. A tabulation of all recommended relay settings, fuse sizes, 480-volt circuit breaker trip settings. Circuit breaker trip settings shall not exceed 125% of the transformer capacity.
4. The final selection of overcurrent devices will be based on this coordination study by the equipment manufacturers and submitted for approval with the shop drawings.

1.4 REFERENCES

A. Institute of Electrical and Electronics Engineers, Inc. (IEEE):

1. IEEE 141 – Recommended Practice for Electric Power Distribution and Coordination of Industrial and Commercial Power Systems
2. IEEE 242 – Recommended Practice for Protection and Coordination of Industrial and Commercial Power Systems
3. IEEE 399 – Recommended Practice for Industrial and Commercial Power System Analysis
4. IEEE 241 – Recommended Practice for Electric Power Systems in Commercial Buildings
5. IEEE 1015 – Recommended Practice for Applying Low-Voltage Circuit Breakers Used in Industrial and Commercial Power Systems.
6. IEEE 1584 - Guide for Performing Arc-Flash Hazard Calculations

B. American National Standards Institute (ANSI):

1. ANSI C57.12.00 – Standard General Requirements for Liquid-Immersed Distribution, Power, and Regulating Transformers
2. ANSI C37.13 – Standard for Low Voltage AC Power Circuit Breakers Used in Enclosures
3. ANSI C37.010 – Standard Application Guide for AC High Voltage Circuit Breakers Rated on a Symmetrical Current Basis
4. ANSI C 37.41 – Standard Design Tests for High Voltage Fuses, Distribution Enclosed Single-Pole Air Switches, Fuse Disconnecting Switches and Accessories.

C. The National Fire Protection Association (NFPA)

1. NFPA 70 - National Electrical Code, latest edition
2. NFPA 70E – Standard for Electrical Safety in the Workplace

1.5 SHOP DRAWINGS, PRODUCT DATA, AND SAMPLES

A. Submit under provisions of Division 1.

B. Product data: For computer software program to be used for studies.

C. Product Certificates: For coordination-study and fault-current-study computer software programs, certifying compliance with IEEE 399.

D. Qualification Data: For coordination-study specialist.

E. Study shall be submitted for approval prior to receiving final approval of the electrical distribution equipment shop drawings and prior to release of equipment for manufacturer.

F. Report:

1. The results of the short-circuit; protective device coordination and arc flash hazard analysis studies shall be summarized in a final report. The report shall include the following sections:

    a. One-line diagram
    b. Descriptions, purpose, basis and scope of the study
    c. Tabulations of circuit breaker, fuse and other protective device ratings versus calculated short circuit duties
    d. Protective device time versus current coordination curves, tabulations of relay and circuit breaker trip unit settings, fuse selection
    e. Fault current calculations including a definition of terms and guide for interpretation of the computer printout
    f. Incident energy and flash protection boundary calculations
    g. Recommendations for system improvements, where needed
    h. Executive Summary.

1.6 QUALITY ASSURANCE

A. Studies shall use computer programs that are distributed nationally and are in wide use. Software algorithms shall comply with requirements of standards and guides specified in this section. Manual calculations are not acceptable.

B. Coordination-Study Specialist Qualifications: An organization experienced in the application of computer software used for studies, having performed successful studies of similar magnitude on electrical distribution systems using similar devices. The short-circuit protective device coordination and arc flash hazard analysis studies shall be conducted under the supervision and approval of a Registered Professional Electrical Engineer licensed in the State of Pennsylvania skilled in performing and interpreting the power system studies.

PART 2 - PRODUCTS

2.1 COMPUTER SOFTWARE DEVELOPERS

A. Provide computer software programs developed by one of the following:

1. EDSA Mycro Corporation
2. CYME International, Inc.
3. Electrical Systems Analysis, Inc.
4. ETAP Operation Technology Inc
5. SKM Systems Analysis Inc.

2.2 COMPUTER SOFTWARE PROGRAM REQUIREMENTS

A. Comply with IEEE 399.

B. Analytical features of fault-current-study computer software program shall include “mandatory, “very desirable”, and “desirable” features as listed in IEEE 399, Table 7-4.

C. Computer software program shall be capable of plotting and diagramming time-current-characteristic curves as part of its output. Computer software program shall report device settings and ratings of all overcurrent protective devices.

PART 3 - EXECUTION

3.1 EXAMINATION

A. Examine project overcurrent protective device submittals for compliance with electrical distribution system coordination requirements and other conditions affecting performance.

B. Proceed with coordination study only after relevant equipment submittals have been assembled. Overcurrent protective devices not submitted for approval with coordination study may not be used in study.

3.2 FAULT CURRENT STUDY

A. Source impedance shall be based on the Utility Company's fault current contribution.

B. Study electrical distribution system from normal and alternate power sources throughout electrical distribution system for the project and use approved computer software program to calculate values. Include studies of system-switching configurations and alternate operations that could result in maximum fault conditions.

C. Calculate momentary and interrupting duties on the basis of maximum available fault current.

D. Calculations to verify interrupting ratings of overcurrent protective devices shall comply with the following:

1. Low-Voltage Circuit Breakers: IEEE 1015 and IEEE C37.50.
2. Low-Voltage Fuses: IEEE C37.46.
3. Circuit Breakers: IEEE C37.13.

E. Study Report: Enter calculated X/R ratios and interrupting (5-cycle) fault currents on electrical distribution system diagram of the report. List other output values from computer analysis, including momentary (1/2-cycle), interrupting (5-cycle), and 30-cycle fault-current values for 3-phase, 2-phase and phase-to-ground faults.

F. Equipment Evaluation Report: Prepare a report on the adequacy of overcurrent protective devices and conductors by comparing fault-current ratings of these devices with calculated fault-current momentary and interrupting duties.

3.3 COORDINATION STUDY

A. Gather and tabulate the following input data to support coordination study:

B. Product Data for overcurrent protective devices specified in other Division 26 Sections and involved in overcurrent protective device coordination studies. Use equipment

designation tags that are consistent with electrical distribution system diagrams, overcurrent protective device submittals, input and output data, and recommended device settings.

1. Impedance of utility service entrance.
2. Electrical distribution system diagram showing the following:
3. Load current that is the basis for sizing continuous ratings of circuits for cables and equipment.
4. Circuit-breaker and fuse-current ratings and types.
5. Relays and associated power and current transformer ratings and ratios.
6. Transformer kilovolt amperes, primary and secondary voltages, connection type, impedance, and X/R ratios.
7. Cables. Indicate conduit material, sizes of conductors, conductor insulation, and length.
8. Data sheets to supplement electrical distribution system diagram, cross-referenced with tag numbers on diagram:

    a. Special load considerations, including starting inrush currents and frequent starting and stopping.
    b. Magnetic inrush current overload capabilities of transformers.
    c. Motor full-load current, locked rotor current, service factor, starting time, type of start, and thermal-damage curve.
    d. Ratings, types, and settings of utility company's overcurrent protective devices.
    e. Special overcurrent protective device settings or types stipulated by utility company.
    f. Time-current-characteristic curves of devices indicated to be coordinated.
    g. Manufacturer, frame size, interrupting rating in amperes rms symmetrical, ampere or current sensor rating, long-time adjustment range, short-time adjustment range, and instantaneous adjustment range for circuit breakers.
    h. Manufacturer and type, ampere-tap adjustment range, time-delay adjustment range, instantaneous attachment adjustment range, and current transformer ratio for overcurrent relays.
    i. Panelboards, switchboards, motor-control center ampacity, and interrupting rating in amperes rms symmetrical.

C. Perform coordination study and prepare a written report using the results of fault-current study and approved computer software program. Comply with IEEE 399.

D. Comply with NFPA 70 for overcurrent protection of circuit elements and devices.

E. Comply with IEEE 141 recommendations for fault currents and time intervals.

F. Transformer Primary Overcurrent Protective Devices:

1. Device shall not operate in response to the following:

    a. Self-cooled, full-load current or forced-air-cooled, full-load current, whichever is specified for that transformer.

b. Permissible transformer overloads according to IEEE C57.96 if required by unusual loading or emergency conditions.

2. Device shall protect transformer according to IEEE C57.12.00, for fault currents.

G. Motors served by voltages more than 600 V shall be protected according to IEEE 620.

H. Conductor Protection: Protect cables against damage from fault currents according to ICEA P-32-382, ICEA P-45-482, and conductor melting curves in IEEE 242. Verify adequacy of phase conductors at maximum three-phase bolted fault currents, equipment grounding conductors, and grounding electrode conductors at maximum ground-fault currents.

I. Coordination-Study Report: Prepare a written report indicating the following results of coordination study:

1. Tabular Format of Settings Selected for Overcurrent Protective Devices:

a. Device tag.
b. Relay-current transformer ratios; and tap, time-dial, and instantaneous-pickup values.
c. Circuit-breaker sensor rating; and long-time, short-time, and instantaneous settings.
d. Fuse-current rating and type.
e. Ground-fault relay-pickup and time-delay settings.

2. Coordination Curves: Prepared to determine settings of overcurrent protective devices to achieve selective coordination. Graphically illustrate that adequate time separation exists between series devices, including power utility company's upstream devices. Show the following specific information:

a. Device tag.
b. Voltage and current ratio for curves.
c. Three-phase and single-phase damage points for each transformer.
d. No damage, melting, and clearing curves for fuses.
e. Cable damage curves.
f. Transformer inrush points.
g. Maximum fault-current cutoff point.

3. Completed data sheets for setting of overcurrent protective devices.

3.4 ARC FLASH HAZARD ANALYSIS

A. The arc flash hazard analysis shall be performed according to the IEEE 1584 equations that are presented in NFPA70E-2004, Annex D.

B. When appropriate, the short circuit calculations and the clearing times of the phase overcurrent devices will be retrieved from the short-circuit and coordination study model. Alternative methods shall be presented in the proposal.

C. The flash protection boundary and the incident energy shall be calculated at all significant locations in the electrical distribution system (switchboards, switchgear, motor-control centers, panelboards, busway and splitters) where work could be performed on energized parts.

D. The Arc-Flash Hazard Analysis shall include all significant locations in 240 volt and 208 volt systems fed from transformers equal to or greater than 125 kVA.

E. Safe working distances shall be specified for calculated fault locations based upon the calculated arc flash boundary considering an incident energy of 1.2 cal/cm^2.

F. The Arc Flash Hazard analysis shall include calculations for maximum and minimum contributions of fault current magnitude. The minimum calculation shall assume that the utility contribution is at a minimum and shall assume a minimum motor load. Conversely, the maximum calculation shall assume a maximum contribution from the utility and shall assume motors to be operating under full-load conditions.

G. Arc flash computation shall include both line and load side of main breaker calculations, where necessary.

H. Arc Flash calculations shall be based on actual overcurrent protective device clearing time. Maximum clearing time will be capped at 2 seconds based on IEEE 1584-2002 section B.1.2.

3.5 FIELD ADJUSTMENT

A. Manufacturer's Field Service: Engage a factory-authorized service representative, of electrical distribution equipment being set and adjusted, to assist in setting of overcurrent protective devices within equipment.

B. Adjust relay and protective device settings according to the recommended settings table provided by the coordination study. Field adjustments to be completed by the engineering service division of the equipment manufacturer under the Startup and Acceptance Testing contract portion.

C. Make minor modifications to equipment as required to accomplish conformance with short circuit and protective device coordination studies.

D. Notify Owner in writing of any required major equipment modifications.

E. Following completion of all studies, acceptance testing and startup by the field engineering service division of the equipment manufacturer, a 2-year warranty shall be provided on all components manufactured by the engineering service parent manufacturing company.

3.6 ARC FLASH WARNING LABELS

A. The vendor shall provide a 3.5 in. x 5 in. thermal transfer type label of high adhesion polyester for each work location analyzed.

B. The label shall have an orange header with the wording, “WARNING, ARC FLASH HAZARD”, and shall include the following information:

1. Location designation
2. Nominal voltage
3. Flash protection boundary
4. Hazard risk category
5. Incident energy
6. Working distance
7. Engineering report number, revision number and issue date.

C. Labels shall be machine printed, with no field markings.

D. Arc flash labels shall be provided in the following manner and all labels shall be based on recommended overcurrent device settings.

1. For each 600, 480 and applicable 208 volt panelboards, one arc flash label shall be provided.
2. For each motor control center, one arc flash label shall be provided.
3. For each low voltage switchboard, one arc flash label shall be provided.
4. For each switchgear, one flash label shall be provided.
5. For medium voltage switches one arc flash label shall be provided

E. Labels shall be field installed by the engineering service division of the equipment manufacturer under the Startup and Acceptance Testing contract portion.

END OF SECTION 260573

SECTION 262213 - LOW VOLTAGE TRANSFORMERS

PART 1 - GENERAL

1.1 RELATED DOCUMENTS

A. Drawings and general provisions of the Contract, including General and Supplementary Conditions and Division 0 & 1 Specification Sections, apply to this Section.

1.2 SECTION INCLUDES

A. Dry type general purpose transformers.

1.3 RELATED SECTIONS

A. Section 260500 – Common Work Results for Electrical

B. Section 260526 - Grounding and Bonding for Electrical Systems

1.4 REFERENCES

A. NFPA 70 - National Electrical Code (NEC)

B. NEMA ST 20 - Dry-Type Transformers for General Applications

C. NEMA TP-1 – Dry-Type Energy Efficient Transformers

D. ANSI - Applicable standards and requirements.

E. U.S. Department of Energy 10 CFR Part 431 Energy Conservation Program: Energy Conservation Standards for Distribution Transformers; Final Rule, dated April 18, 2013. These efficiency standards shall take effect January 1, 2016. All transformers covered in the scope of this document and this specification, manufactured after December 31, 2015, shall be compliant with the new standard (NEMA Premium).

1.5 SUBMITTALS

A. Shop Drawings and Product Data: Submit under provisions of Division 1.

B. Submit Shop Drawings and/or manufacturer’s descriptive literature, operating instructions, maintenance and repair data.

PART 2 - PRODUCTS

2.1 ACCEPTABLE MANUFACTURERS

A. Eaton Cutler Hammer, Pittsburgh, PA.

B. Siemens.

C. Square-D Company, Palatine, IL

D. General Electric

2.2 EQUIPMENT - GENERAL

A. Transformers shall meet minimum rating of 10 CFR Part 431 as identified above unless noted otherwise.

B. Transformers shall be UL listed or labeled and shall have the following features:

1. Self-cooled by natural convection, isolating windings, indoor, dry type. Autotransformers shall not be accepted.
2. Ratings and winding connections shall be as shown on the drawings.
3. Ratings shown on the drawings are for continuous-duty without the use of cooling fans.
4. Class H insulation. Temperature rise shall not exceed 150° C above 40° C ambient, with limiting temperature of 220° C in accordance with NEMA standards for transformers 600 volts and below.
5. All terminations shall be rated for a minimum of 75° C.

C. Core and coil assemblies:

1. Windings shall be wound of high quality copper.
2. Rigidly braced to withstand the stresses caused by short circuit currents and rough handling during shipment.
3. Cores shall be grain oriented, non-aging, silicon steel.
4. Coils shall be continuous windings without splices except for taps.
5. Primary, secondary and tap connections shall be razed or pressure type.
6. Coil windings shall have end fillers or tie downs for maximum strength.
7. The core windings shall meet the following standard 10KV BIL for 600 volts and below ratings.

D. Certified sound levels determined in accordance with NEMA ST-20, that do not exceed the following:

Transformer Rating	Sound Level Rating
0 - 9 KVA	40 dB
10 - 50 KVA	45 dB
51 - 150 KVA	50 dB
151 - 300 KVA	55 dB
301 - 500 KVA	60 dB
501 - 1000 KVA	64 dB

E. Nominal impedance shall be as shown on the drawings. If not shown on the drawings, nominal impedance shall be not less than 4.0 percent.

F. All three-phase transformers shall have two, 2 $^1/_2$% full capacity taps above and two 2 $^1/_2$% full capacity taps below normal rated primary voltage.

G. Core assemblies shall be grounded to their enclosures by adequate flexible, ground straps.

H. Enclosures:

1. Not less than code gauge steel.
2. Temperature rise at hottest spot shall conform to NEMA Standards.
3. Ventilation openings shall prevent accidental access to live components.
4. Thoroughly clean and paint at the factory with manufacturer's prime coat and standard finish. Standard NEMA features and accessories including ground pad, lifting provisions and nameplate with the wiring diagram and sound level indicated on it.
5. Dimensions and configurations shall conform to the spaces designated for their installations.
6. Enclosures shall be NEMA-3R for outdoor use with the addition of weather shields. Front and rear covers shall be removable to provide access to terminal compartments.

PART 3 - EXECUTION

3.1 INSTALLATION

A. Install units plumb, level and rigid without distortion.

B. Installation shall be in accordance with the NFPA 70, and as shown on the drawings per manufacturers recommendations.

C. Install the transformers with adequate air circulation for removal of the heat produced by transformers.

D. Install transformers on 4” concrete housing pads.

E. Install transformers on vibration pads designed to suppress transformer noise and vibrations.

F. Use flexible metal conduit to contain the conductors from the transformer to the raceway system.

END OF SECTION 262213

This page intentionally left blank.

SECTION 262413 - SWITCHBOARDS

PART 1 - GENERAL

1.1 SUMMARY

A. Scope: Provide labor, material, equipment, related services, and supervision required, including, but not limited to, manufacturing, fabrication and configuration for low voltage switchboards (also identified as SWBDs) as required for the complete performance of the Work, as shown on the Drawings, as specified herein.

B. Note: Switchboard shall be supplied by the Owner and installed by the Contractor. Refer to the drawings for transport path space limitations.

C. Switchboard shall be designed for close coupling to an existing Square-D switchgear lineup. Main Circuit Breaker shall be close-couple wired to existing Square-D Sorgel Dry Transformer, Serial Number 984216-A1, Class AA, 750KVA, 4160-208Y/120V, 6.00 Percent Impedance, 150C Rise. Manufacturer’s date 09/1998.

D. Related Sections: Related sections include, but shall not be limited to, the following:

1. Drawings and general provisions of the Contract, including General and Supplementary Conditions and Division 01 Specification Sections, apply to this Section.
2. Applicable general requirements for electrical Work specified within Division 26 Specification Sections apply to this Section.
3. The following SWBD information is typically depicted on the Drawings: bus configuration, bus ratings, interrupting ratings, component size and type, power line and feeder connections, application specific control wiring, elevation and footprint, etc. Where not shown on or able to be derived from the Drawings, the minimum requirements specified herein shall be provided.

1.2 REFERENCES

A. General, Publications: The publications listed below form a part of this Specification to the extent referenced. The publications are referred to in the text by the basic designation only. The edition/revision of the referenced publications shall be the latest date as of the date of the Contract Documents, unless otherwise specified.

1. ASTM (ASTM):

    a. ASTM E 329, "Standard Specification for Agencies Engaged in the Testing and/or Inspection of Materials Used in Construction."

2. Federal Specifications (FS):

    a. FS W-C-375, "Circuit Breakers, Molded Case, Branch Circuit and Service."

3. Institute of Electrical and Electronics Engineers, Inc. (IEEE):

   a. ANSI/IEEE C57.13, "Standard Requirements for Instrument Transformers".

4. International Electrical Testing Association (NETA):

   a. NETA ATS, "Acceptance Testing Specifications for Electrical Power Distribution Equipment and Systems."

5. International Organization for Standardization (ISO):

   a. ISO 9001, "Quality Management Systems - Requirements."
   b. ISO 14001, “Environmental Management Systems – Requirements”

6. Military Standardization Documents (MIL):

   a. MIL-STD-220, "Method of Insertion Loss Measurement."

7. National Electrical Contractors Association (NECA):

   a. NECA 400, “Standard for Installing and Maintaining Switchboards"

8. National Electrical Manufacturers Association (NEMA):

   a. NEMA EI 21.1, "Instrument Transformers for Revenue Metering (110 kV BIL and Less).”
   b. NEMA KS 1, "Enclosed and Miscellaneous Distribution Equipment Switches (600 Volts Maximum)"
   c. NEMA PB 2, "Deadfront Distribution Switchboards."
   d. NEMA PB 2.1, "General Instructions for Proper Handling, Installation, Operation and Maintenance of Deadfront Distribution Switchboards Rated 600 Volts or Less."

9. National Fire Protection Association (NFPA):

   a. NFPA 70, "National Electrical Code" (NEC)
   b. NFPA 70B, “Electrical Equipment Maintenance”
   c. NFPA 70E, “Standard for Electrical Safety in the Workplace”

10. Underwriters Laboratories, Inc. (UL):

   a. UL 98, "Standard for Enclosed and Dead-Front Switches"
   b. UL 489, "Standard for Molded-Case Circuit Breakers and Circuit Breaker Enclosures."
   c. UL 891, "Standard for Dead-Front Switchboards"
   d. UL 943, "Standard for Ground-Fault Circuit Interrupters"
   e. UL 1283, “Standard for Safety for Electro-Magnetic Interference Filters"
   f. UL 1449, "Standard for Surge Protective Devices"

1.3 DEFINITIONS

A. Unless specifically defined within the Contract Documents, the words or acronyms contained within this specification shall be as defined within, or by the references listed within this specification, the Contract Documents, or, if not listed by either, by common industry practice.

1.4 SUBMITTALS

A. General: Submittals shall be in accordance with the requirements of Division 1 in addition to those specified herein.

1. Submit sufficient information to determine compliance with the Contract Documents. Identify submittal data with the specific equipment tags and/or service descriptions to which they pertain. Submittal data shall be clearly marked to identify the specific model numbers, options, and features of equipment and work proposed.
2. Deviations from the Contract Documents shall be indicated within the submittal. Each deviation shall reference the corresponding drawing or specification number, show the Contract Document requirement text and/or illustration, and shall be accompanied by a detailed written justification for the deviation.
3. Submit required product data and shop drawings specific to each product and accessory proposed. In addition, include the following information, including dimensions and manufacturer's technical data on features, performance, ratings and finishes:

    a. Each type of SWBD overcurrent protective device
    b. Surge Protective Devices (SPD)
    c. Ground Fault Protectors
    d. Additional accessories and components indicated herein.
    e. Indicate front and side enclosure elevations with overall dimensions, conduit entrance locations and requirements, nameplate legends, one-line diagrams, equipment schedule and switchboard instrument details.
    f. Submit mimic-bus diagram.

4. Wiring Diagrams: Submit wiring diagrams detailing power, signal, and control systems, clearly differentiating between manufacturer-installed wiring and field-installed wiring, and between components provided by the manufacturer and those provided by others.
5. Quality Control Submittals:

    a. Test Reports: Submit field quality control test reports.

B. Operation & Maintenance (O&M) manuals shall be provided in accordance with the minimum requirements specified in Division 1 and additional requirements specified herein.

1.5 QUALITY ASSURANCE

A. Manufacturer Qualifications: Manufacturer shall be a firm engaged in the manufacture of specified products of types and sizes required, and whose products have been in satisfactory use in similar service for a minimum of 20 years.

1. The manufacturer shall have a valid ISO 9001 certification and an applicable quality assurance system that is regularly reviewed and audited by a third-party registrar. Manufacturing, inspection, and testing procedures shall be developed and controlled under the guidelines of the quality assurance system.
2. The manufacturer or their representative shall have service, repair, and technical support services available 24 hours 7 days a week basis:
3. The manufacturer shall have the ISO 14001 Environment Certification and shall supply the Product Environmental Profile (P.E.P.) upon request of the Engineer.

B. Installer Qualifications: Installer shall be a firm that shall have a minimum of five years of successful installation experience with projects utilizing switchboards similar in type and scope to that required for this Project.

C. Inspecting and Testing Agency Qualifications: To qualify for acceptance, an independent inspecting and testing agency hired by the Contractor or manufacturer to test products shall demonstrate to the Architect/Engineer's satisfaction that they are qualified according to ASTM E 329 to conduct testing indicated.

D. All work performed and all materials used shall be in accordance with the National Electrical Code, and with applicable local regulations and ordinances. Equipment, assemblies and materials shall be listed and labeled by Underwriter's Laboratories or by a testing agency acceptable to authorities having jurisdiction and marked for intended use.

1.6 DELIVERY, STORAGE, AND HANDLING

A. Prior to delivery to the Project site, ensure that suitable storage space is available to store materials in a well-ventilated area protected from weather, moisture, soiling, extreme temperatures, humidity, and corrosive atmospheres. Materials shall be protected during delivery and storage and shall not exceed the manufacturer stated storage requirements. As a minimum, store indoors in clean, dry space with uniform temperature to prevent condensation. In addition, protect electronics from all forms of electrical and magnetic energy that could reasonably cause damage.

B. Deliver materials to the Project site in supplier's or manufacturer's original wrappings and containers, labeled with supplier's or manufacturer's name, material or product brand name, and equipment tag number or service name as identified within the Contract Documents.

C. Inspect and report any concealed damage or violation of delivery storage, and handling requirements to the Engineer.

1.7 WARRANTY

A. General: Refer to Division 1 Section "Closeout Procedures".

B. Surge Protective Devices: Warranty shall be provided by the equipment manufacturer and supported by their respective field services organization, for a period of five years, incorporating unlimited replacement of suppressor parts.

C. Additional Owner Rights: The warranty shall not deprive the Owner of other rights the Owner may have under other provisions of the Contract Documents and shall be in addition to and run concurrent with other warranties made by the Contractor under requirements of the Contract Documents.

1.8 SPECIAL TOOLS AND SPARE PARTS

A. The Supplier shall provide a recommended spare parts list with the following information provided as a minimum:

1. Contact information for the closest parts stocking location to the Owner.
2. Critical spare parts shall be identified as those parts being associated with long lead times and/or those being critical to the unit's operation.
3. Maintenance spares shall be identified as being those parts required to regularly perform scheduled maintenance on the furnished equipment. These spares shall include, but shall not be limited to, consumable spares that are required to be exchanged during scheduled maintenance periods.

B. Spare parts shall be provided for each type and size of unit installed. At a minimum, the following shall be provided:

1. Provide the minimum spare parts recommended by the manufacturer.
2. Provide [1] set of each type of power and control fuse installed within equipment
3. Provide [2] indicating pilot lights, if not LED type, of each color and type installed

C. Any manufacturer specific special tool, not normally found in an electrician’s toolbox, required to remove and install recommended or furnished spare parts shall be furnished. At a minimum the following shall be provided:

1. If available from manufacture, provide PC-based configuration software tool and a minimum of [one] communication interface cable for each type of cable required to connect a PC-based computer to the devices specified herein for configuration and programming.
2. Electronic configuration files, in a media format acceptable by the Owner (e.g. CD, USB stick, etc.), updated to an as-installed and commissioned state.

D. Spare parts shall be properly marked and packaged for long term storage. Printed circuit boards shall be provided in separate anti-static containers.

PART 2 - PRODUCTS

2.1 MANUFACTURERS

A. Basis-of-Design Product: Subject to compliance with requirements, provide Square D QED-2 Switchboard by Schneider Electric by Schneider Electric.

2.2 General Requirements

A. The following SWBD information is typically depicted on the Drawings: bus configuration, bus ratings, interrupting ratings, component size and type, power line and feeder connections, application specific control wiring, elevation and footprint, etc. Where not shown on or able to be derived from the Drawings, the minimum requirements specified herein shall be provided.

B. Front Accessible Switchboard: I-Line type, group-mounted plug-on branches 1200 amperes and less, with sections front and rear aligned.

C. Nominal System Voltage: Nominal AC system voltage shall be 208/120 volts. DC systems shall be rated up to 250V.

D. Main Bus Continuous: Provide 2500 ampere rating.

E. Short Circuit Current Rating: 42 kA

F. Enclosure: Provide steel enclosure, in compliance with UL 891, NEMA Type 1.

G. Enclosure Finish: Provide factory-applied finish in manufacturer's paint over a rust-inhibiting primer on treated metal surface. Paint finish shall be medium gray in color, ANSI #49.

H. Barriers: Provide barriers between adjacent switchboard sections.

I. Insulation and isolation: Provide taped bus for through bus.

J. Front Covers and Doors:

1. Front covers shall be screw removable with a single tool.

K. Pull Box on Top of Switchboard:

1. Provide adequate ventilation to maintain temperature in pull box within same limits as switchboard.
2. Removable covers shall form top, front, and sides.
3. Bottom shall be insulating, fire-resistive material with separate holes for cable drops into switchboard.
4. Lace cables using industry-approved methods.

L. Buses and Connections: Three phase, four wire, unless otherwise indicated. Provide hard-drawn plated copper of 98 percent conductivity.

1. Group-Mounted Feeder Vertical Bus Stack:

a. Bus stack shall be capable of mounting feeder breakers with different frame sizes and number of poles across from one another on the bus stack.
b. Non-conducting surface films shall be removed during circuit breaker installation by a wiping action of the circuit breaker jaws.

c. The design of the circuit breaker jaws and bus stack shall create blow-on forces under fault conditions.
d. Bolted lap joint connections for feeder breakers shall not be allowed for group-mounted feeders.

2. Ground Bus: Size per current NEC and UL 891 Tables 28.1 and 28.2, hard-drawn copper of 98 percent conductivity, equipped with pressure connectors for feeder and branch circuit ground conductors. For busway feeders, extend insulated equipment grounding cable to busway ground connection and support cable at intervals in vertical run.
3. Bus Composition: Tin plated copper. Plating shall be applied continuously to bus work. The switchboard bussing shall be of sufficient cross-sectional area to meet UL 891 temperature rise requirements. The phase and neutral through-bus shall have an ampacity as shown on the Drawings. For four-wire systems, the neutral shall be of equivalent ampacity as the phase bus bar. Tapered bus is not permitted. Full provisions for the addition of future sections shall be provided. Bussing shall include, but shall not be limited to, necessary hardware to accommodate splicing for future additions.
4. Isolation Barrier Access Provisions: Allows for inspection access to check bus bolt torque values.

M. Future Devices: Equip compartments with mounting brackets, supports, bus connections, and appurtenances at full rating of circuit breaker compartment.

2.3 SURGE PROTECTIVE DEVICES (SPD)

A. Surge protective devices shall be listed and components shall be recognized in accordance with UL 1449 to include Section 37.3 highest fault current category. Surge protective devices shall be UL 1283 listed.

B. Surge protective devices shall be installed by, and shipped from, the electrical distribution equipment manufacturer’s factory.

C. Provide surge current diversion paths for all modes of protection; L-N, L-G and N-G in WYE systems.

D. Surge protective devices shall be modular in design. Each mode, including N-G, shall be fused with a 200 kA IR UL-classified surge-rated fuse and incorporating a thermal cutout device.

E. Audible diagnostic monitoring shall be by way of audible alarm. Alarm shall activate upon a fault condition. Provide an alarm on/off switch to silence alarm. Provide an alarm push-to-test switch.

F. If a dedicated breaker for the surge protective device is not provided, the surge protective device shall include an UL-recognized disconnect switch.

G. Meet or exceed the following criteria:

1. Minimum surge current capability (single pulse rated) per phase shall be 240 kA.

2. UL 1449 suppression voltage rating, voltage L-N, L-G, N-G, shall be 480Y/277 volts; 600 volts.

H. EMI/RFI filtering shall be minimum -50 dB at 100 kHz with insertion ratio of 50:1 using MIL-STD-220 methodology.

I. Provide with one set of NO/NC dry contacts.

J. Accessories shall include but shall not be limited to, six-digit transient counter set to total transient surges that deviate from the sine wave envelope by more than 125 volts.

2.4 OVERCURRENT PROTECTIVE DEVICES

A. Breaker Type:

1. Thermal magnetic/basic electronic circuit breakers.
2. Electronic trip, standard and advanced.
3. Current-limiting circuit breakers.
4. GFCI circuit breakers (single-pole and two-pole configurations with 5 mA trip sensitivity).

B. Molded Case Circuit Breaker Features and Accessories: Standard frame sizes, trip ratings, and number of poles.

1. Lugs: Suitable for number, size, trip ratings, and conductor material.
2. Application Listing: Appropriate for application; Type SWD for switching fluorescent lighting loads; Type HACR for heating, air-conditioning, and refrigerating equipment.
3. Ground Fault Protection: Integral to circuit breaker with adjustable pickup and time delay settings, push-to-test feature, and ground fault indicator.
4. Undervoltage Trip: Set to operate at 35 to 75 percent of rated voltage with field-adjustable 0.1 second to 0.6 second time delay.
5. Zone Selective Interlocking: Integral with electronic trip unit; for interlocking ground fault protection function.
6. Any circuit breaker over 1200A shall be electronic trip and shall be equipped with ERMS, an acceptable means of arc flash reduction as per the 2014 National Electric Code.
7. Provide adjustable magnetic trip on all breakers sized from 100 amperes to 400 amperes.
8. Provide adjustable electronic trip units with cause of trip indicator targets on all circuit breakers 400 amperes and larger.

C. Enclosed, Insulated Case Circuit Breaker (MCB): Fully rated, encased power circuit breaker with interrupting capacity rating to meet available fault current.

1. Mounting: Fixed circuit breaker mounting.
2. Closing: Two-step, stored energy closing.
3. Trip Units: Microprocessor-based trip units with interchangeable rating plug, LED trip indicators, and the following field-adjustable settings:

    a. Instantaneous trip.

b. Long-time and short-time pickup levels.
c. Long-time and short-time time adjustments with I2t response.
d. Ground fault pickup level, time delay, and I2t response.

4. Remote: Remote trip indication and control.
5. Communication Capability: See Section
6. Zone Selective Interlocking: Integral with electronic trip unit; for interlocking ground fault protection function.
7. Any circuit breaker over 1200A shall be electronic trip and shall be equipped with ERMS, an acceptable means of arc flash reduction as per the 2014 National Electric Code.
8. Circuit breaker shall be Square-D MasterPact MTZ 100% Rated.

2.5 CONTROL POWER

A. Control Circuits: 120 volts, supplied through secondary disconnecting devices from control power transformer.

B. Control Wiring: Factory-installed, with bundling, lacing, and protection included. Provide flexible conductors for No. 8 AWG and smaller, for conductors across hinges, and for conductors for interconnections between shipping units.

2.6 POWER Metering

A. Provide a power meter for each application shown on drawings as follows:

1. LV Mains: The metering device used to monitor the low voltage mains for network management, energy cost allocation, power quality analysis, asset management, operational efficiency, and compliance reporting, shall be as follows: a Power Quality Meter as specified in Section 26 27 13.16 Power Quality Meters.

    a. Provide the following specified product and manufacturer without exception, unless approved as a substitute by addendum to the Contract Documents prior to the bid date: PowerLogic Circuit Monitor PM5563 Meter by Schneider Electric.

2. Separate low voltage HMI and display shall be mounted on the same door as the Main Circuit Breaker.
3. I/O and Ethernet communications card shall be provided as necessary.

B. Instrument Transformers: NEMA EI 21.1, ANSI/IEEE C57.13, and the following:

1. Potential Transformers: Secondary voltage rating of 120 volts and NEMA accuracy class of 0.3 with burdens of W, X, and Y.
2. Current Transformers: Ratios shall be as indicated with accuracy class and burden suitable for connected relays, meters, and instruments.
3. Control Power Transformers: Dry type, mounted in separate compartments for units larger than 3 kV.
4. Current Transformers for Neutral and Ground Fault Current Sensing: Connect secondaries to ground overcurrent relays to provide selective tripping of main

and tie circuit breaker. Coordinate with feeder circuit breaker ground fault protection.

2.7 MARKINGS AND LABELING

A. All identification and warning labels and nameplates exterior to the SWBD shall be resistant to their intended installation environment.

B. Each SWBD and feeder breaker shall be provided with an engraved nameplate identifying the project specific equipment tag and service description.

C. Warning labels and nameplates shall be present at access locations to advise personnel of possible hazards. The SWBD shall be marked in accordance with UL, NFPA 70 NEC, NFPA 70E, and other applicable standards.

D. Mimic Bus: Provide an anodized aluminum or plastic engraved plaque. Arrange in single-line diagram format, using symbols and letter designations consistent with final mimic bus diagram. Produce a concise visual presentation of principal switchboard components and connections.

PART 3 - EXECUTION

3.1 GENERAL

A. In addition to the requirements specified herein, execution shall be in accordance with the requirements of Specification Section 26 05 00 and Drawings.

B. Examine equipment exterior and interior prior to installation. Report any damage and do not install any equipment that is structurally, moisture, or mildew damaged.

C. Verification of Conditions: Examine areas and conditions under which the work is to be installed, and notify the Contractor in writing, with a copy to the Owner and the Engineer, of any conditions detrimental to the proper and timely completion of the work. Do not proceed with the work until unsatisfactory conditions have been corrected.

1. Check that concrete pads are level and free of irregularities.
2. Installation space is enclosed and weatherproof.
3. Any wet-work located in or in close proximity to switchboard installation location is completed and nominally dry.
4. Work above ceilings is complete.

D. Beginning of the work shall indicate acceptance of the areas and conditions as satisfactory by the Installer.

E. Install equipment in accordance with reviewed product data, final shop drawings, manufacturer’s written instructions and recommendations, and as indicated on the Drawings.

F. Install nameplates for switchboard and each feeder/branch device.

G. Functional testing, commissioning, and first parameter adjusting shall be carried out by a factory trained manufacturer's representative field service engineer. Test and adjust controls and safeties. Replace damaged or malfunctioning controls and equipment. Report to the Engineer any discrepancies or issues with the installation.

H. Provide final protection and maintain conditions in a manner acceptable to the manufacturer that shall help ensure that the equipment is without damage at time of Substantial Completion.

END OF SECTION 262413

This page intentionally left blank.

SECTION 262716 - ELECTRICAL CABINETS AND ENCLOSURES

PART 1 - GENERAL

1.1 RELATED DOCUMENTS

A. Drawings and general provisions of the Contract, including General and Supplementary Conditions and Division 0 & 1 Specification Sections, apply to this Section.

1.2 SECTION INCLUDES

A. Hinged cover enclosures.

B. Cabinets.

1.3 RELATED SECTIONS

A. Division 26 Section “Hangers and Supports for Electrical Systems”

1.4 REFERENCES

A. NEMA 250 - Enclosures for Electrical Equipment (1000 Volts Maximum)

B. NEMA ICS 4 - Terminal Blocks for Industrial Control Equipment and Systems

C. ANSI/NFPA 70 - National Electrical Code

1.5 SUBMITTALS

A. Submit under provisions of Division 1.

B. Product Data: Provide manufacturer's standard data for enclosures and cabinets.

C. Manufacturer's Instructions: Indicate application conditions and limitations of use stipulated by Product testing agency specified under Regulatory Requirements. Include instructions for storage, handling, protection, examination, preparation, installation, and starting of Product.

PART 2 - PRODUCTS

2.1 ACCEPTABLE MANUFACTURERS

A. Hoffman.

B. Austin.

C. B-Line.

D. APX

2.2 HINGED COVER ENCLOSURES

A. Construction: NEMA 250, Type to suit conditions and location, steel enclosure.

B. Covers: Continuous hinge, held closed by flush latch operable by key.

C. Provide interior metal panel for mounting terminal blocks and electrical components; finish with white enamel.

D. Enclosure Finish: Manufacturer's standard enamel.

2.3 CABINETS

A. Boxes: Galvanized steel.

B. Box Size: As indicated on Drawings or required.

C. Fronts: Steel, surface type with concealed trim clamps, concealed hinge, and flush lock keyed to match branch circuit panelboard. Finish with gray baked enamel.

D. Knockouts: None.

E. Provide metal barriers to separate compartments containing control wiring operating at less than 50 volts from power wiring.

PART 3 - EXECUTION

3.1 EXAMINATION

A. Verify conditions under provisions of Division 1.

B. Verify that surfaces are ready to receive Work.

3.2 INSTALLATION

A. Install Products in accordance with manufacturer's instructions.

B. Install enclosures and boxes plumb. Anchor securely to wall and structural supports at each corner.

C. Install cabinet fronts plumb.

END OF SECTION 262716

SECTION 262816 - ENCLOSED SWITCHES AND CIRCUIT BREAKERS

PART 1 - GENERAL

1.1 RELATED DOCUMENTS

A. Drawings and general provisions of the Contract, including General and Supplementary Conditions and Division 0 & 1 Specification Sections, apply to this Section.

1.2 SECTION INCLUDES

A. Safety switches.

B. Enclosed Circuit Breakers

1.3 RELATED SECTIONS

A. Section 26 05 53 – Identification for Electrical Systems

1.4 REFERENCES

A. UL 98 - Enclosed Switches

1. UL 198.2 - High-Interrupting Capacity Fuses, Current Limiting Type UL 198.
2. UL 198 Class R. Fuses
3. UL 977 - Fused Power-Circuit Devices

B. National Electrical Code (NEC)

1. NEMA KS 1 - Enclosed Switches
2. NEMA KS 2-Bolted Pressure Contact Switches
3. NEMA-Classification of Standard Types of Nonventilated Enclosures for Electrical Controllers

C. NECA (National Electrical Contractors Association) "Standard of Installation"

D. NEMA AB 1 - Molded Case Circuit Breakers
SUBMITTALS

E. Shop Drawings and Product Data: Submit in accordance with Division 1.

F. Submit manufacturer's descriptive literature, operating instructions and maintenance and repair data.

PART 2 - PRODUCTS

2.1 ACCEPTABLE MANUFACTURERS

A. Eaton Cutler Hammer, Pittsburgh, PA

B. Siemens.

C. Square-D Company, Palatine, IL.

D. General Electric

2.2 LOW VOLTAGE FUSIBLE SWITCHES RATED 600 AMPERES AND LESS

A. Quick-make, quick-break type in accordance with UL98, NEMA KS1, NEC and as shown on the drawings.

B. Shall be capable of accepting UL and NEMA standard fuses as shown on the drawings. Where nonfused switches are shown on the drawings for use as disconnects, the switches shall be the nonfused type.

C. Shall have the following features:

1. Switch mechanism shall be the quick-make, quick-break type.
2. Copper blades, visible in the OFF position.
3. An arc chute for each pole.
4. External operating handle shall indicate ON and OFF position and shall have lock-open padlocking provisions.
5. Mechanical interlock shall permit opening of the door only when the switch is in the OFF position, defeatable by a special tool to permit inspection.
6. Fuse mounting for the size and type of fuses shown on the drawings. Furnish switches completely fused.
7. Solid neutral for each switch being installed in a circuit that includes a neutral conductor.

    a. Enclosures:

        1) NEMA - Type 1 indoors.
        2) NEMA - Type 3R outdoors or as noted.

    b. Where the types of switch enclosures are not shown, they shall be the NEMA types that are most suitable for the environmental conditions where the switches are being installed.

D. Shall be heavy duty, Type HD, and horsepower rated as required.

E. Terminations shall be 75 degree C minimum.

2.3 FUSES

A. Fuses for all safety switches and all other fusible devices shall be current limiting with pure silver short circuit elements, "O"-ring seals, non-renewable, cartridge dual element type capable of carrying 500% indicated rating for a minimum of 10 seconds, shall have an Underwriters' Laboratories listed interrupting capacity of 200,000 RMS amperes and shall have standard National Electrical Code dimensions. Fuses shall be Fusetron RK5 type manufactured by Bussman Manufacturing Company.

B. Furnish a complete set of spare fuses for each switch being installed. Provide additional sets of spare fuses to constitute not less than two complete sets for the type, size and rating of each set installed. Deliver the fuses to the Owner prior to the final inspection.

2.4 ENCLOSED CIRCUIT BREAKERS

A. Enclosed circuit breaker: NEMA AB 1, with interrupting capacity to meet available fault currents. Provide thermal magnetic circuit breakers with inverse time-current element for low-level overloads and instantaneous magnetic trip element for short circuits. Provide adjustable magnetic trip setting for circuit-breaker fame sizes 100-400 amp. Provide adjustable electronic trip units for circuit-breaker frame sizes 400 amp and larger. Enclosure shall be NEMA AB 1 and NEMA KS 1 to meet environmental conditions of installed location, NEMA - Type 1 indoors, NEMA - Type 3R outdoors or as noted. Minimum integrated short circuit rating: 22,000 amperes rms symmetrical for 240 volt circuit breakers; 65,000 amperes RMS symmetrical for 480 volt circuit breakers, or as indicated.

B. Terminations shall be 75 degree C minimum.

PART 3 - EXECUTION

3.1 INSTALLATION

A. Install safety switches and enclosed circuit breakers as required by NFPA 70 and in accordance with the manufacturer’s recommendation.

B. Install pressure sensitive labels within the switch door, indicating fuse size and type installed therein.

C. Pressure sensitive tape shall be $^{3}/_{8}$”, red with white letters.

D. Provide engraved plastic nameplates under the provisions of Section 26 05 53 “Identification for Electrical Systems”.

END OF SECTION 262816

This page intentionally left blank.

SECTION 280500 - COMMON WORK RESULTS FOR ELECTRONIC SAFETY AND SECURITY SYSTEMS

PART 1 - GENERAL

1.1 RELATED DOCUMENTS

A. Drawings and general provisions of the Contract, including General and Supplementary Conditions and Division 0 & 1 Specification Sections, apply to this Section.

1.2 SUMMARY

A. Section Includes:

B. Sleeves for raceways and cables.

C. Sleeve seals.

D. Grout.

E. Common electronic safety and security installation requirements.

1.3 SUBMITTALS

A. Product Data: For sleeve seals.

PART 2 - PRODUCTS

2.1 SLEEVES FOR RACEWAYS AND CABLES

A. Steel Pipe Sleeves: ASTM A 53/A 53M, Type E, Grade B, Schedule 40, galvanized steel, plain ends.

2.2 GROUT

A. Nonmetallic, Shrinkage-Resistant Grout: ASTM C 1107, factory-packaged, nonmetallic aggregate grout, noncorrosive, nonstaining, mixed with water to consistency suitable for application and a 30-minute working time.

PART 3 - EXECUTION

3.1 COMMON REQUIREMENTS FOR ELECTRONIC SAFETY AND SECURITY INSTALLATION

A. Comply with NECA 1.

B. Measure indicated mounting heights to bottom of unit for suspended items and to center of unit for wall-mounting items.

C. Headroom Maintenance: If mounting heights or other location criteria are not indicated, arrange and install components and equipment to provide maximum possible headroom consistent with these requirements.

D. Equipment: Install to facilitate service, maintenance, and repair or replacement of components of both electronic safety and security equipment and other nearby installations. Connect in such a way as to facilitate future disconnecting with minimum interference with other items in the vicinity.

E. Right of Way: Give to piping systems installed at a required slope.

3.2 SLEEVE INSTALLATION FOR ELECTRONIC SAFETY AND SECURITY PENETRATIONS

A. Electronic safety and security penetrations occur when raceways, pathways, cables, wireways, or cable trays penetrate concrete slabs, concrete or masonry walls, or fire-rated floor and wall assemblies.

B. Concrete Slabs and Walls: Install sleeves for penetrations unless core-drilled holes or formed openings are used. Install sleeves during erection of slabs and walls.

C. Use pipe sleeves unless penetration arrangement requires rectangular sleeved opening.

D. Fire-Rated Assemblies: Install sleeves for penetrations of fire-rated floor and wall assemblies unless openings compatible with firestop system used are fabricated during construction of floor or wall.

E. Cut sleeves to length for mounting flush with both surfaces of walls.

F. Extend sleeves installed in floors 2 inches above finished floor level.

G. Size pipe sleeves to provide 1/4-inch annular clear space between sleeve and raceway or cable, unless indicated otherwise.

H. Seal space outside of sleeves with grout for penetrations of concrete and masonry

1. Promptly pack grout solidly between sleeve and wall so no voids remain. Tool exposed surfaces smooth; protect grout while curing.

I. Interior Penetrations of Non-Fire-Rated Walls and Floors: Seal annular space between sleeve and raceway or cable, using joint sealant appropriate for size, depth, and location of joint. Comply with requirements in Division 07 Section "Joint Sealants.".

J. Fire-Rated-Assembly Penetrations: Maintain indicated fire rating of walls, partitions, ceilings, and floors at raceway and cable penetrations. Install sleeves and seal raceway and cable penetration sleeves with firestop materials. Comply with requirements in Division 07 Section "Penetration Firestopping."

K. Roof-Penetration Sleeves: Seal penetration of individual raceways and cables with flexible boot-type flashing units applied in coordination with roofing work.

L. Aboveground, Exterior-Wall Penetrations: Seal penetrations using steel pipe sleeves and mechanical sleeve seals. Select sleeve size to allow for 1-inch annular clear space between pipe and sleeve for installing mechanical sleeve seals.

M. Underground, Exterior-Wall Penetrations: Install cast-iron pipe sleeves. Size sleeves to allow for 1-inch annular clear space between raceway or cable and sleeve for installing mechanical sleeve seals.

3.3 SLEEVE-SEAL INSTALLATION

A. Install to seal exterior wall penetrations.

B. Use type and number of sealing elements recommended by manufacturer for raceway or cable material and size. Position raceway or cable in center of sleeve. Assemble mechanical sleeve seals and install in annular space between raceway or cable and sleeve. Tighten bolts against pressure plates that cause sealing elements to expand and make watertight seal.

3.4 FIRESTOPPING

A. Apply firestopping to penetrations of fire-rated floor and wall assemblies for electronic safety and security installations to restore original fire-resistance rating of assembly. Firestopping materials and installation requirements are specified in Division 07 Section "Penetration Firestopping."

END OF SECTION 280500

This page intentionally left blank.

SECTION 280513 - CONDUCTORS AND CABLES FOR ELECTRONIC SAFETY AND SECURITY SYSTEMS

PART 1 - GENERAL

1.1 RELATED DOCUMENTS

A. Drawings and general provisions of the Contract, including General and Supplementary Conditions and Division 0 & 1 Specification Sections, apply to this Section.

1.2 SUMMARY

A. Section Includes:

1. Low-voltage control cabling.
2. Control-circuit conductors.
3. Fire alarm wire and cable.
4. Identification products.

B. Contractor to coordinate with owner/security supplier for specific cabling required.

1.3 SUBMITTALS

A. Product Data: For each type of product indicated.

B. Shop Drawings: Cable tray layout, showing cable tray route to scale, with relationship between the tray and adjacent structural, electrical, and mechanical elements.

C. Qualification Data: For qualified layout technician, installation supervisor, and field inspector.

D. Source quality-control reports.

E. Field quality-control reports.

F. Maintenance data.

1.4 QUALITY ASSURANCE

A. Surface-Burning Characteristics: As determined by testing identical products according to ASTM E 84 by a qualified testing agency. Identify products with appropriate markings of applicable testing agency.

1. Flame-Spread Index: 25 or less.
2. Smoke-Developed Index: 50 or less.

B. Electrical Components, Devices, and Accessories: Listed and labeled as defined in NFPA 70, by a qualified testing agency, and marked for intended location and application.

PART 2 - PRODUCTS

2.1 PATHWAYS

A. Support of Open Cabling: NRTL labeled for support of cabling, designed to prevent degradation of cable performance and pinch points that could damage cable.

1. Support brackets with cable tie slots for fastening cable ties to brackets.
2. Lacing bars, spools, J-hooks, and D-rings.
3. Straps and other devices.

B. Conduit and Boxes: Comply with requirements in Division 26 Section "Boxes." Flexible metal conduit shall not be used.

1. Outlet boxes shall be no smaller than 2 inches wide, 3 inches high, and 2-1/2 inches deep.

2.2 LOW-VOLTAGE CONTROL CABLE

A. Paired Lock Cable: NFPA 70, Type CMG.

1. 1 pair, twisted, No. 16 AWG, stranded (19x29) tinned copper conductors.
2. PVC insulation.
3. Unshielded.
4. PVC jacket.
5. Flame Resistance: Comply with UL 1581.

B. Plenum-Type, Paired Lock Cable: NFPA 70, Type CMP.

1. 1 pair, twisted, No. 16 AWG, stranded (19x29) tinned copper conductors.
2. PVC insulation.
3. Unshielded.
4. PVC jacket.
5. Flame Resistance: Comply with NFPA 262.

C. Paired Lock Cable: NFPA 70, Type CMG.

1. 1 pair, twisted, No. 18 AWG, stranded (19x30) tinned copper conductors.
2. PVC insulation.
3. Unshielded.
4. PVC jacket.
5. Flame Resistance: Comply with UL 1581.

D. Plenum-Type, Paired Lock Cable: NFPA 70, Type CMP.

1. 1 pair, twisted, No. 18 AWG, stranded (19x30) tinned copper conductors.
2. Fluorinated ethylene propylene insulation.
3. Unshielded.
4. Plastic jacket.
5. Flame Resistance: NFPA 262, Flame Test.

2.3 CONTROL-CIRCUIT CONDUCTORS

A. Class 1 Control Circuits: Stranded copper, Type THHN-THWN, in raceway complying with UL 83.

B. Class 2 Control Circuits: Stranded copper, Type THHN-THWN, in raceway power-limited tray cable, in cable tray complying with UL 83.

C. Class 3 Remote-Control and Signal Circuits: Stranded copper, Type TW or TF, complying with UL 83.

2.4 FIRE ALARM WIRE AND CABLE

A. Manufacturers: Subject to compliance with requirements, available manufacturers offering products that may be incorporated into the Work include, but are not limited to, the following:

1. Comtran Corp.
2. Draka USA.
3. Genesis Cable Products; Honeywell International, Inc.
4. Rockbestos-Suprenant Cable Corporation.
5. West Penn Wire/CDT; a division of Cable Design Technologies.

B. General Wire and Cable Requirements: NRTL listed and labeled as complying with NFPA 70, Article 760.

C. Signaling Line Circuits: Twisted, shielded pair, not less than No. 18 AWG size as recommended by system manufacturer.

1. Circuit Integrity Cable: Twisted shielded pair, NFPA 70, Article 760, Classification CI, for power-limited fire alarm signal service Type FPL. NRTL listed and labeled as complying with UL 1424 and UL 2196 for a 2-hour rating.

D. Non-Power-Limited Circuits: Solid-copper conductors with 600-V rated, 75 deg C, color-coded insulation.

1. Low-Voltage Circuits: No. 16 AWG, minimum.
2. Line-Voltage Circuits: No. 12 AWG, minimum.
3. Multiconductor Armored Cable: NFPA 70, Type MC, copper conductors, Type TFN/THHN conductor insulation, copper drain wire, copper armor with outer jacket with red identifier stripe, NTRL listed for fire alarm and cable tray installation, plenum rated, and complying with requirements in UL 2196 for a 2-hour rating.

2.5 IDENTIFICATION PRODUCTS

A. Manufacturers: Subject to compliance with requirements, available manufacturers offering products that may be incorporated into the Work include, but are not limited to, the following:

1. Brady Corporation

2. HellermannTyton.
3. Kroy LLC.
4. Panduit Corp.

B. Comply with UL 969 for a system of labeling materials, including label stocks, laminating adhesives, and inks used by label printers.

C. Comply with requirements in Division 26 Section "Identification for Electrical Systems."

2.6 SOURCE QUALITY CONTROL

A. Testing Agency: Engage a qualified testing agency to evaluate cables.

B. Cable will be considered defective if it does not pass tests and inspections.

C. Prepare test and inspection reports.

PART 3 - EXECUTION

3.1 INSTALLATION OF PATHWAYS

A. Cable Trays: Comply with NEMA VE 2 and TIA/EIA-569-A-7.

B. Comply with TIA/EIA-569-A for pull-box sizing and length of conduit and number of bends between pull points.

C. Comply with requirements in Division 26 for installation of conduits and wireways.

D. Install manufactured conduit sweeps and long-radius elbows whenever possible.

E. Pathway Installation in Equipment Rooms:

1. Position conduit ends adjacent to a corner on backboard where a single piece of plywood is installed or in the corner of room where multiple sheets of plywood are installed around perimeter walls of room.
2. Install cable trays to route cables if conduits cannot be located in these positions.
3. Secure conduits to backboard when entering room from overhead.
4. Extend conduits 3 inches above finished floor.
5. Install metal conduits with grounding bushings and connect with grounding conductor to grounding system.

F. Backboards: Install backboards with 96-inch dimension vertical aff. Butt adjacent sheets tightly and form smooth gap-free corners and joints.

3.2 INSTALLATION OF CONDUCTORS AND CABLES

A. Comply with NECA 1.

B. General Requirements for Cabling:

1. Terminate all conductors; no cable shall contain unterminated elements. Make terminations only at indicated outlets or terminals.
2. Cables may not be spliced. Secure and support cables at intervals not exceeding 30 inches and not more than 6 inches from cabinets, boxes, fittings, outlets, and terminals.
3. Bundle, lace, and train conductors to terminal points without exceeding manufacturer's limitations on bending radii. Install lacing bars and distribution spools.
4. Do not install bruised, kinked, scored, deformed, or abraded cable. Do not splice cable between termination, tap, or junction points. Remove and discard cable if damaged during installation and replace it with new cable.
5. Cold-Weather Installation: Bring cable to room temperature before dereeling. Heat lamps shall not be used for heating.
6. Pulling Cable: Do not exceed manufacturer's instructions as to allowable pulling tension. Monitor cable pull tensions.

3.3 FIRE ALARM WIRING INSTALLATION

A. Comply with NECA 1 and NFPA 72.

B. Wiring Method: Install wiring in metal raceway according to Division 26.

1. Install plenum cable in environmental air spaces, including plenum ceilings.
2. Fire alarm circuits and equipment control wiring associated with the fire alarm system shall be installed in a dedicated raceway system. This system shall not be used for any other wire or cable.

C. Wiring Method:

1. Cables and raceways used for fire alarm circuits, and equipment control wiring associated with the fire alarm system, may not contain any other wire or cable.
2. Fire-Rated Cables: Use of 2-hour, fire-rated fire alarm cables, NFPA 70, Types MI and CI, is not permitted.
3. Signaling Line Circuits: Power-limited fire alarm cables shall not be installed in the same cable or raceway as signaling line circuits.

D. Wiring within Enclosures: Separate power-limited and non-power-limited conductors as recommended by manufacturer. Install conductors parallel with or at right angles to sides and back of the enclosure. Bundle, lace, and train conductors to terminal points with no excess. Connect conductors that are terminated, spliced, or interrupted in any enclosure associated with the fire alarm system to terminal blocks. Mark each terminal according to the system's wiring diagrams. Make all connections with approved crimp-on terminal spade lugs, pressure-type terminal blocks, or plug connectors.

E. Cable Taps: Use numbered terminal strips in junction, pull, and outlet boxes, cabinets, or equipment enclosures where circuit connections are made.

F. Color-Coding: Color-code fire alarm conductors differently from the normal building power wiring. Use one color-code for alarm circuit wiring and another for supervisory circuits. Color-code audible alarm-indicating circuits differently from alarm-initiating

circuits. Use different colors for visible alarm-indicating devices. Paint fire alarm system junction boxes and covers red.

G. Risers: Install at least two vertical cable risers to serve the fire alarm system. Separate risers in close proximity to each other with a minimum one-hour-rated wall, so the loss of one riser does not prevent the receipt or transmission of signals from other floors or zones.

H. Wiring to Remote Alarm Transmitting Device: 1-inch conduit between the fire alarm control panel and the transmitter. Install number of conductors and electrical supervision for connecting wiring as needed to suit monitoring function.

3.4 CONTROL-CIRCUIT CONDUCTORS

A. Minimum Conductor Sizes:

1. Class 1 remote-control and signal circuits, No. 14 AWG.
2. Class 2 low-energy, remote-control and signal circuits, No. 16 AWG.
3. Class 3 low-energy, remote-control, alarm and signal circuits, No. 12 AWG.

3.5 CONNECTIONS

A. Comply with requirements in Division 28 Section "Fire Detection and Alarm" for connecting, terminating, and identifying wires and cables.

3.6 FIRESTOPPING

A. Comply with requirements in Division 07 Penetration Fire Stopping

B. For low-voltage wiring and cabling, comply with requirements in Division 26 Section "Grounding and Bonding for Electrical Systems."

3.7 IDENTIFICATION

A. Comply with requirements for identification specified in Division 26 Section "Identification for Electrical Systems."

3.8 FIELD QUALITY CONTROL

A. Tests and Inspections:

1. Visually inspect cable jacket materials for UL or third-party certification markings. Inspect cabling terminations to confirm color-coding.
2. Visually inspect cable placement, cable termination, grounding, and bonding.

B. Document data for each measurement. Print data for submittals in a summary report that is formatted via raw data or transfer the data from the instrument to the computer, save as text files, print, and submit.

C. Prepare test and inspection reports.

END OF SECTION 280513

This page intentionally left blank.

SECTION 280528 - PATHWAYS FOR ELECTRONIC SAFETY AND SECURITY SYSTEMS

PART 1 - GENERAL

1.1 RELATED DOCUMENTS

A. Drawings and general provisions of the Contract, including General and Supplementary Conditions and Division 0 & 1 Specification Sections, apply to this Section.

1.2 SECTION INCLUDES

A. Pathways for Electronic Safety and Security Systems.

1.3 RELATED SECTIONS

A. Section 260533 – Conduit

B. Section 260532 – Boxes

C. Section 260553 – Identification for Electrical Systems

1.4 REQUIREMENTS OF REGULATORY AGENCIES

A. Conform to National Electrical Code and to requirements of applicable inspection authority

PART 2 - PRODUCTS

2.1 COMPONENTS

A. Conduit: Refer to Section 260533 - Conduit, for requirements.

B. Boxes: Refer to Section 260532 - Boxes, for requirements.

PART 3 - EXECUTION

3.1 INSTALLATION

A. The Contractor shall furnish and install complete conduit system as indicated on the drawings.

B. An empty conduit 1” minimum size or as noted on the plans shall serve each single electronic safety and security box, unless otherwise indicated. Conduit to extend from outlet or device location and extend to electrical room or location noted on plans. Terminate conduit with insulated end bushing.

C. Pull boxes shall be installed by contractor where required by the Owner.

D. A 12 gauge 200 pound test galvanized fishwire with 12" of free wire at each end shall be provided in each conduit.

E. Contractor shall coordinate outlet box size to accommodate outlet and cover.

END OF SECTION 280528

SECTION 311000 - SITE CLEARING

PART 1 - GENERAL

1.1 SUMMARY

A. Section Includes:

1. Stripping and stockpiling topsoil.
2. Removing above- and below-grade site improvements.
3. Disconnecting, capping, or sealing site utilities.
4. Temporary erosion and sedimentation control.

1.2 PREINSTALLATION MEETINGS

A. Preinstallation Conference: Conduct conference at Project site.

1.3 MATERIAL OWNERSHIP

A. Except for materials indicated to be stockpiled or otherwise remain Owner's property, cleared materials shall become Contractor's property and shall be removed from Project site.

1.4 FIELD CONDITIONS

A. Traffic: Minimize interference with adjoining roads, streets, walks, and other adjacent occupied or used facilities during site-clearing operations.

1. Do not close or obstruct streets, walks, or other adjacent occupied or used facilities without permission from Owner and authorities having jurisdiction.
2. Provide alternate routes around closed or obstructed trafficways if required by Owner or authorities having jurisdiction.

B. Salvageable Improvements: Carefully remove items indicated to be salvaged and store on Owner's premises where indicated.

C. Utility Locator Service: Notify utility locator service for area where Project is located before site clearing.

D. Do not commence site clearing operations until temporary erosion- and sedimentation-control and plant-protection measures are in place.

PART 2 - PRODUCTS

2.1 MATERIALS

A. Satisfactory Soil Material: Requirements for satisfactory soil material are specified in Section 312000 "Earth Moving."

1. Obtain approved borrow soil material off-site when satisfactory soil material is not available on-site.

PART 3 - EXECUTION

3.1 PREPARATION

A. Protect and maintain benchmarks and survey control points from disturbance during construction.

B. Protect existing site improvements to remain from damage during construction.

1. Restore damaged improvements to their original condition, as acceptable to Owner.

3.2 TEMPORARY EROSION AND SEDIMENTATION CONTROL

A. Provide temporary erosion- and sedimentation-control measures to prevent soil erosion and discharge of soil-bearing water runoff or airborne dust to adjacent properties and walkways, according to erosion- and sedimentation-control Drawings and requirements of authorities having jurisdiction.

B. Verify that flows of water redirected from construction areas or generated by construction activity do not enter or cross protection zones.

C. Inspect, maintain, and repair erosion- and sedimentation-control measures during construction until permanent vegetation has been established.

D. Remove erosion and sedimentation controls and restore and stabilize areas disturbed during removal.

3.3 EXISTING UTILITIES

A. Locate, identify, disconnect, and seal or cap utilities indicated to be removed or abandoned in place.

1. Arrange with utility companies to shut off indicated utilities.

B. Interrupting Existing Utilities: Do not interrupt utilities serving facilities occupied by Owner or others, unless permitted under the following conditions and then only after arranging to provide temporary utility services according to requirements indicated:

1. Notify Architect not less than two days in advance of proposed utility interruptions.
2. Do not proceed with utility interruptions without Architect's written permission.

C. Removal of underground utilities is included in earthwork sections; in applicable fire suppression, plumbing, HVAC, electrical, communications, electronic safety and security, and utilities sections; and in Section 024116 "Structure Demolition" and Section 024119 "Selective Demolition."

3.4 SITE IMPROVEMENTS

A. Remove existing above- and below-grade improvements as indicated and necessary to facilitate new construction.

3.5 DISPOSAL OF SURPLUS AND WASTE MATERIALS

A. Remove surplus soil material, unsuitable topsoil, obstructions, demolished materials, and waste materials including trash and debris, and legally dispose of them off Owner's property.

B. Separate recyclable materials produced during site clearing from other nonrecyclable materials. Store or stockpile without intermixing with other materials and transport them to recycling facilities. Do not interfere with other Project work.

END OF SECTION 311000

This page intentionally left blank.

SECTION 312000 - EARTH MOVING

PART 1 - GENERAL

1.1 SUMMARY

A. Section Includes:

1. Excavating and filling for rough grading the Site.
2. Preparing subgrades for slabs-on-grade, walks, pavements and turf and grasses.
3. Excavating and backfilling for buildings and structures.
4. Drainage course for concrete slabs-on-grade.
5. Subbase course for concrete walks and pavements.
6. Subbase course and base course for asphalt paving.
7. Excavating and backfilling trenches for utilities and pits for buried utility structures.

1.2 DEFINITIONS

A. Backfill: Soil material used to fill an excavation.

1. Initial Backfill: Backfill placed beside and over pipe in a trench, including haunches to support sides of pipe.
2. Final Backfill: Backfill placed over initial backfill to fill a trench.

B. Base Course: Aggregate layer placed between the subbase course and hot-mix asphalt paving.

C. Bedding Course: Aggregate layer placed over the excavated subgrade in a trench before laying pipe.

D. Borrow Soil: Satisfactory soil imported from off-site for use as fill or backfill.

E. Drainage Course: Aggregate layer supporting the slab-on-grade that also minimizes upward capillary flow of pore water.

F. Excavation: Removal of material encountered above subgrade elevations and to lines and dimensions indicated.

1. Authorized Additional Excavation: Excavation below subgrade elevations or beyond indicated lines and dimensions as directed by Architect. Authorized additional excavation and replacement material will be paid for according to Contract provisions for changes in the Work.
2. Unauthorized Excavation: Excavation below subgrade elevations or beyond indicated lines and dimensions without direction by Architect. Unauthorized excavation, as well as remedial work directed by Architect, shall be without additional compensation.

G. Fill: Soil materials used to raise existing grades.

H. Structures: Buildings, footings, foundations, retaining walls, slabs, tanks, curbs, mechanical and electrical appurtenances, or other man-made stationary features constructed above or below the ground surface.

I. Subbase Course: Aggregate layer placed between the subgrade and base course for hot-mix asphalt pavement, or aggregate layer placed between the subgrade and a cement concrete pavement or a cement concrete or hot-mix asphalt walk.

J. Subgrade: Uppermost surface of an excavation or the top surface of a fill or backfill immediately below subbase, drainage fill, drainage course, or topsoil materials.

K. Utilities: On-site underground pipes, conduits, ducts, and cables as well as underground services within buildings.

1.3 PREINSTALLATION MEETINGS

A. Preinstallation Conference: Conduct preexcavation conference at Project site.

1.4 INFORMATIONAL SUBMITTALS

A. Material test reports.

1.5 FIELD CONDITIONS

A. Utility Locator Service: Notify utility locator service for area where Project is located before beginning earth-moving operations.

B. Do not commence earth-moving operations until plant-protection measures specified in Section 015639 "Temporary Tree and Plant Protection" are in place.

PART 2 - PRODUCTS

2.1 SOIL MATERIALS

A. General: Provide borrow soil materials when sufficient satisfactory soil materials are not available from excavations.

B. Satisfactory Soils: Soil Classification Groups A-1, A-2-4, A-2-5, and A-3 according to AASHTO M 145, or a combination of these groups; free of rock or gravel larger than 3 inches (75 mm) in any dimension, debris, waste, frozen materials, vegetation, and other deleterious matter.

C. Unsatisfactory Soils: Soil Classification Groups A-2-6, A-2-7, A-4, A-5, A-6, and A-7 according to AASHTO M 145], or a combination of these groups.

1. Unsatisfactory soils also include satisfactory soils not maintained within 2 percent of optimum moisture content at time of compaction.

D. Subbase Material: Naturally or artificially graded mixture of natural or crushed gravel, crushed stone, and natural or crushed sand; ASTM D2940/D2940M; with at least 90

percent passing a 1-1/2-inch (37.5-mm) sieve and not more than 12 percent passing a No. 200 (0.075-mm) sieve.

E. Base Course: Naturally or artificially graded mixture of natural or crushed gravel, crushed stone, and natural or crushed sand; ASTM D2940/D2940M; with at least 95 percent passing a 1-1/2-inch (37.5-mm) sieve and not more than 8 percent passing a No. 200 (0.075-mm) sieve.

F. Engineered Fill: Naturally or artificially graded mixture of natural or crushed gravel, crushed stone, and natural or crushed sand; ASTM D2940/D2940M; with at least 90 percent passing a 1-1/2-inch (37.5-mm) sieve and not more than 12 percent passing a No. 200 (0.075-mm) sieve.

G. Bedding Course: Naturally or artificially graded mixture of natural or crushed gravel, crushed stone, and natural or crushed sand; ASTM D2940/D2940M; except with 100 percent passing a 1-inch (25-mm) sieve and not more than 8 percent passing a No. 200 (0.075-mm) sieve.

H. Drainage Course: Narrowly graded mixture of crushed stone or crushed or uncrushed gravel; ASTM D448; coarse-aggregate grading Size 57; with 100 percent passing a 1-1/2-inch (37.5-mm) sieve and zero to 5 percent passing a No. 8 (2.36-mm) sieve.

2.2 ACCESSORIES

A. Warning Tape: Acid- and alkali-resistant, polyethylene film warning tape manufactured for marking and identifying underground utilities, 6 inches (150 mm) wide and 4 mils (0.1 mm) thick, continuously inscribed with a description of the utility; colored to comply with local practice or requirements of authorities having jurisdiction.

B. Detectable Warning Tape: Acid- and alkali-resistant, polyethylene film warning tape manufactured for marking and identifying underground utilities, a minimum of 6 inches (150 mm) wide and 4 mils (0.1 mm) thick, continuously inscribed with a description of the utility, with metallic core encased in a protective jacket for corrosion protection, detectable by metal detector when tape is buried up to 30 inches (750 mm) deep; colored to comply with local practice or requirements of authorities having jurisdiction.

PART 3 - EXECUTION

3.1 PREPARATION

A. Protect structures, utilities, sidewalks, pavements, and other facilities from damage caused by settlement, lateral movement, undermining, washout, and other hazards created by earth-moving operations.

B. Protect and maintain erosion and sedimentation controls during earth-moving operations.

C. Protect subgrades and foundation soils from freezing temperatures and frost. Remove temporary protection before placing subsequent materials.

3.2 EXCAVATION, GENERAL

A. Unclassified Excavation: Excavate to subgrade elevations regardless of the character of surface and subsurface conditions encountered. Unclassified excavated materials may include rock, soil materials, and obstructions. No changes in the Contract Sum or the Contract Time will be authorized for rock excavation or removal of obstructions.

1. If excavated materials intended for fill and backfill include unsatisfactory soil materials and rock, replace with satisfactory soil materials.

3.3 EXCAVATION FOR STRUCTURES

A. Excavate to indicated elevations and dimensions within a tolerance of plus or minus 1 inch (25 mm). If applicable, extend excavations a sufficient distance from structures for placing and removing concrete formwork, for installing services and other construction, and for inspections.

1. Excavations for Footings and Foundations: Do not disturb bottom of excavation. Excavate by hand to final grade just before placing concrete reinforcement. Trim bottoms to required lines and grades to leave solid base to receive other work.
2. Pile Foundations: Stop excavations 6 to 12 inches (150 to 300 mm) above bottom of pile cap before piles are placed. After piles have been driven, remove loose and displaced material. Excavate to final grade, leaving solid base to receive concrete pile caps.
3. Excavation for Underground Tanks, Basins, and Mechanical or Electrical Utility Structures: Excavate to elevations and dimensions indicated within a tolerance of plus or minus 1 inch (25 mm). Do not disturb bottom of excavations intended as bearing surfaces.

B. Excavations at Edges of Tree- and Plant-Protection Zones:

1. Excavate by hand or with an air spade to indicated lines, cross sections, elevations, and subgrades. If excavating by hand, use narrow-tine spading forks to comb soil and expose roots. Do not break, tear, or chop exposed roots. Do not use mechanical equipment that rips, tears, or pulls roots.
2. Cut and protect roots according to requirements in Section 015639 "Temporary Tree and Plant Protection."

3.4 EXCAVATION FOR WALKS AND PAVEMENTS

A. Excavate surfaces under walks and pavements to indicated lines, cross sections, elevations, and subgrades.

3.5 EXCAVATION FOR UTILITY TRENCHES

A. Excavate trenches to indicated gradients, lines, depths, and elevations.

B. Excavate trenches to uniform widths to provide the following clearance on each side of pipe or conduit. Excavate trench walls vertically from trench bottom to 12 inches (300 mm) higher than top of pipe or conduit unless otherwise indicated.

1. Clearance: 12 inches (300 mm) each side of pipe or conduit and as indicated.

C. Trench Bottoms: Excavate and shape trench bottoms to provide uniform bearing and support of pipes and conduit. Shape subgrade to provide continuous support for bells, joints, and barrels of pipes and for joints, fittings, and bodies of conduits. Remove projecting stones and sharp objects along trench subgrade.

1. Excavate trenches 6 inches (150 mm) deeper than elevation required in rock or other unyielding bearing material to allow for bedding course.

3.6 SUBGRADE INSPECTION

A. Proof-roll subgrade below the building slabs and pavements with a pneumatic-tired dump truck to identify soft pockets and areas of excess yielding. Do not proof-roll wet or saturated subgrades.

B. Reconstruct subgrades damaged by freezing temperatures, frost, rain, accumulated water, or construction activities, as directed by Architect, without additional compensation.

3.7 UNAUTHORIZED EXCAVATION

A. Fill unauthorized excavation under foundations or wall footings by extending bottom elevation of concrete foundation or footing to excavation bottom, without altering top elevation. Lean concrete fill, with 28-day compressive strength of 2500 psi (17.2 MPa), may be used when approved by Architect.

1. Fill unauthorized excavations under other construction, pipe, or conduit as directed by Architect.

3.8 STORAGE OF SOIL MATERIALS

A. Stockpile borrow soil materials and excavated satisfactory soil materials without intermixing. Place, grade, and shape stockpiles to drain surface water. Cover to prevent windblown dust.

1. Stockpile soil materials away from edge of excavations. Do not store within drip line of remaining trees.

3.9 UTILITY TRENCH BACKFILL

A. Place backfill on subgrades free of mud, frost, snow, or ice.

B. Place and compact bedding course on trench bottoms and where indicated. Shape bedding course to provide continuous support for bells, joints, and barrels of pipes and for joints, fittings, and bodies of conduits.

C. Trenches under Footings: Backfill trenches excavated under footings and within 18 inches (450 mm) of bottom of footings with satisfactory soil; fill with concrete to elevation of bottom of footings. Concrete is specified in Section 033000 "Cast-in-Place Concrete."

D. Trenches under Roadways: Provide 4-inch- (100-mm-) thick, concrete-base slab support for piping or conduit less than 30 inches (750 mm) below surface of roadways. After installing and testing, completely encase piping or conduit in a minimum of 4 inches (100 mm) of concrete before backfilling or placing roadway subbase course. Concrete is specified in Section 033000 "Cast-in-Place Concrete."

E. Initial Backfill: Place and compact initial backfill of subbase material, free of particles larger than 1 inch (25 mm) in any dimension, to a height of 12 inches (300 mm) over the pipe or conduit.

1. Carefully compact initial backfill under pipe haunches and compact evenly up on both sides and along the full length of piping or conduit to avoid damage or displacement of piping or conduit. Coordinate backfilling with utilities testing.

F. Final Backfill: Place and compact final backfill of satisfactory soil to final subgrade elevation.

G. Warning Tape: Install warning tape directly above utilities, 12 inches (300 mm) below finished grade, except 6 inches (150 mm) below subgrade under pavements and slabs.

3.10 SOIL FILL

A. Plow, scarify, bench, or break up sloped surfaces steeper than 1 vertical to 4 horizontal so fill material will bond with existing material.

B. Place and compact fill material in layers to required elevations as follows:

1. Under grass and planted areas, use satisfactory soil material.
2. Under walks and pavements, use satisfactory soil material.
3. Under steps and ramps, use engineered fill.
4. Under building slabs, use engineered fill.
5. Under footings and foundations, use engineered fill.

3.11 SOIL MOISTURE CONTROL

A. Uniformly moisten or aerate subgrade and each subsequent fill or backfill soil layer before compaction to within 2 percent of optimum moisture content.

1. Do not place backfill or fill soil material on surfaces that are muddy, frozen, or contain frost or ice.
2. Remove and replace, or scarify and air dry, otherwise satisfactory soil material that exceeds optimum moisture content by 2 percent and is too wet to compact to specified dry unit weight.

3.12 COMPACTION OF SOIL BACKFILLS AND FILLS

A. Place backfill and fill soil materials in layers not more than 8 inches (200 mm) in loose depth for material compacted by heavy compaction equipment and not more than 4 inches (100 mm) in loose depth for material compacted by hand-operated tampers.

B. Place backfill and fill soil materials evenly on all sides of structures to required elevations and uniformly along the full length of each structure.

C. Compact soil materials to not less than the following percentages of maximum dry unit weight according to ASTM D698.

1. Under structures, building slabs, steps, and pavements, scarify and recompact top 12 inches (300 mm) of existing subgrade and each layer of backfill or fill soil material at 95 percent.
2. Under walkways, scarify and recompact top 6 inches (150 mm) below subgrade and compact each layer of backfill or fill soil material at 92 percent.
3. Under turf or unpaved areas, scarify and recompact top 6 inches (150 mm) below subgrade and compact each layer of backfill or fill soil material at 85 percent.
4. For utility trenches, compact each layer of initial and final backfill soil material at 85 percent.

3.13 GRADING

A. General: Uniformly grade areas to a smooth surface, free of irregular surface changes. Comply with compaction requirements and grade to cross sections, lines, and elevations indicated.

B. Site Rough Grading: Slope grades to direct water away from buildings and to prevent ponding. Finish subgrades to elevations required to achieve indicated finish elevations, within the following subgrade tolerances:

1. Turf or Unpaved Areas: Plus or minus 1 inch (25 mm).
2. Walks: Plus or minus 1 inch (25 mm).
3. Pavements: Plus or minus 1/2 inch (13 mm).

C. Grading inside Building Lines: Finish subgrade to a tolerance of 1/2 inch (13 mm) when tested with a 10-foot (3-m) straightedge.

3.14 SUBBASE AND BASE COURSES UNDER PAVEMENTS AND WALKS

A. Place subbase course and base course on subgrades free of mud, frost, snow, or ice.

B. On prepared subgrade, place subbase course and base course under pavements and walks as follows:

1. Shape subbase course and base course to required crown elevations and cross-slope grades.
2. Place subbase course and base course that exceeds 6 inches (150 mm) in compacted thickness in layers of equal thickness, with no compacted layer more than 6 inches (150 mm) thick or less than 3 inches (75 mm) thick.

3. Compact subbase course and base course at optimum moisture content to required grades, lines, cross sections, and thickness to not less than 95 percent of maximum dry unit weight according to ASTM D698.

3.15 DRAINAGE COURSE UNDER CONCRETE SLABS-ON-GRADE

A. Place drainage course on subgrades free of mud, frost, snow, or ice.

B. On prepared subgrade, place and compact drainage course under cast-in-place concrete slabs-on-grade as follows:

1. Place drainage course that exceeds 6 inches (150 mm) in compacted thickness in layers of equal thickness, with no compacted layer more than 6 inches (150 mm) thick or less than 3 inches (75 mm) thick.
2. Compact each layer of drainage course to required cross sections and thicknesses to not less than 95 percent of maximum dry unit weight according to ASTM D698.

3.16 FIELD QUALITY CONTROL

A. Special Inspections: Owner will engage a qualified special inspector to perform inspections.

B. Testing Agency: Owner will engage a qualified geotechnical engineering testing agency to perform tests and inspections.

C. Allow testing agency to inspect and test subgrades and each fill or backfill layer. Proceed with subsequent earth moving only after test results for previously completed work comply with requirements.

D. Footing Subgrade: At footing subgrades, at least one test of each soil stratum will be performed to verify design bearing capacities. Subsequent verification and approval of other footing subgrades may be based on a visual comparison of subgrade with tested subgrade when approved by Architect.

E. When testing agency reports that subgrades, fills, or backfills have not achieved degree of compaction specified, scarify and moisten or aerate, or remove and replace soil materials to depth required; recompact and retest until specified compaction is obtained.

3.17 PROTECTION

A. Protecting Graded Areas: Protect newly graded areas from traffic, freezing, and erosion. Keep free of trash and debris.

B. Repair and reestablish grades to specified tolerances where completed or partially completed surfaces become eroded, rutted, settled, or where they lose compaction due to subsequent construction operations or weather conditions.

C. Where settling occurs before Project correction period elapses, remove finished surfacing, backfill with additional soil material, compact, and reconstruct surfacing.

1. Restore appearance, quality, and condition of finished surfacing to match adjacent work, and eliminate evidence of restoration to greatest extent possible.

3.18 DISPOSAL OF SURPLUS AND WASTE MATERIALS

A. Remove surplus satisfactory soil and waste materials, including unsatisfactory soil, trash, and debris, and legally dispose of them off Owner's property.

END OF SECTION 312000

This page intentionally left blank.

SECTION 312319 – DEWATERING

PART 1 - GENERAL

1.1 SUMMARY

A. Section includes construction dewatering.

1.2 PREINSTALLATION MEETINGS

A. Preinstallation Conference: Conduct conference at Project site.

1.3 FIELD CONDITIONS

A. Survey Work: Engage a qualified land surveyor or professional engineer to survey adjacent existing buildings, structures, and site improvements; establish exact elevations at fixed points to act as benchmarks. Clearly identify benchmarks and record existing elevations.

PART 2 - PRODUCTS

2.1 PERFORMANCE REQUIREMENTS

A. Dewatering Performance: Design, furnish, install, test, operate, monitor, and maintain dewatering system of sufficient scope, size, and capacity to control hydrostatic pressures and to lower, control, remove, and dispose of ground water and permit excavation and construction to proceed on dry, stable subgrades.

PART 3 - EXECUTION

3.1 PREPARATION

A. Provide temporary grading to facilitate dewatering and control of surface water.

B. Protect and maintain temporary erosion and sedimentation controls, which are specified in Section 311000 "Site Clearing," during dewatering operations.

3.2 INSTALLATION

A. Install dewatering system utilizing wells, well points, or similar methods complete with pump equipment, standby power and pumps, filter material gradation, valves, appurtenances, water disposal, and surface-water controls.

1. Space well points or wells at intervals required to provide sufficient dewatering.
2. Use filters or other means to prevent pumping of fine sands or silts from the subsurface.

B. Place dewatering system into operation to lower water to specified levels before excavating below ground-water level.

C. Provide standby equipment on-site, installed and available for immediate operation, to maintain dewatering on continuous basis if any part of system becomes inadequate or fails.

3.3 OPERATION

A. Operate system continuously until drains, sewers, and structures have been constructed and fill materials have been placed or until dewatering is no longer required.

B. Operate system to lower and control ground water to permit excavation, construction of structures, and placement of fill materials on dry subgrades. Drain water-bearing strata above and below bottom of foundations, drains, sewers, and other excavations.

1. Do not permit open-sump pumping that leads to loss of fines, soil piping, subgrade softening, and slope instability.
2. Reduce hydrostatic head in water-bearing strata below subgrade elevations of foundations, drains, sewers, and other excavations.
3. Maintain piezometric water level a minimum of 24 inches (600 mm) below bottom of excavation.

C. Remove dewatering system from Project site on completion of dewatering. Plug or fill well holes with sand or cut off and cap wells a minimum of 36 inches (900 mm) below overlying construction.

3.4 FIELD QUALITY CONTROL

A. Survey-Work Benchmarks: Resurvey benchmarks regularly during dewatering and maintain an accurate log of surveyed elevations for comparison with original elevations. Promptly notify Architect if changes in elevations occur or if cracks, sags, or other damage is evident in adjacent construction.

END OF SECTION 312319

SECTION 315000 - EXCAVATION SUPPORT AND PROTECTION

PART 1 - GENERAL

1.1 SUMMARY

A. Section includes temporary excavation support and protection systems.

1.2 PREINSTALLATION MEETINGS

A. Preinstallation Conference: Conduct conference at Project site.

1.3 ACTION SUBMITTALS

A. Shop Drawings: For excavation support and protection system, prepared by or under the supervision of a qualified professional engineer.

B. Delegated-Design Submittal: For excavation support and protection systems, including analysis data signed and sealed by the qualified professional engineer responsible for their preparation.

1.4 INFORMATIONAL SUBMITTALS

A. Qualification Data: For the following:

1. Professional Engineer: Experience with providing delegated-design engineering services of the type indicated, including documentation that engineer is licensed in the jurisdiction in which Project is located.

B. Contractor Calculations: For excavation support and protection system. Include analysis data signed and sealed by the qualified professional engineer responsible for their preparation.

C. Existing Conditions: Using photographs, show existing conditions of adjacent construction and site improvements that might be misconstrued as damage caused by inadequate performance of excavation support and protection systems. Submit before Work begins.

1.5 CLOSEOUT SUBMITTALS

A. Record Drawings: Identify locations and depths of capped utilities, abandoned-in-place support and protection systems, and other subsurface structural, electrical, or mechanical conditions.

1.6 FIELD CONDITIONS

A. Interruption of Existing Utilities: Do not interrupt any utility-serving facilities occupied by Owner or others unless permitted under the following conditions and then only after arranging to provide temporary utility according to requirements indicated:

1. Notify Owner no fewer than two days in advance of proposed interruption of utility.
2. Do not proceed with interruption of utility without Owner's written permission.

B. Survey Work: Engage a qualified land surveyor or professional engineer to survey adjacent existing buildings, structures, and site improvements; establish exact elevations at fixed points to act as benchmarks. Clearly identify benchmarks and record existing elevations.

PART 2 - PRODUCTS

2.1 PERFORMANCE REQUIREMENTS

A. Delegated Design: Engage a qualified professional engineer, as defined in Section 014000 "Quality Requirements," to design excavation support and protection systems to resist all lateral loading and surcharge, including but not limited to, retained soil, groundwater pressure, adjacent building loads, adjacent traffic loads, construction traffic loads, material stockpile loads, and seismic loads, based on the following:

1. Compliance with OSHA Standards and interpretations, 29 CFR 1926, Subpart P.
2. Compliance with AASHTO Standard Specification for Highway Bridges or AASHTO LRFD Bridge Design Specification, Customary U.S. Units.
3. Compliance with requirements of authorities having jurisdiction.
4. Compliance with utility company requirements.
5. Compliance with railroad requirements.

2.2 MATERIALS

A. Provide materials that are either new or in serviceable condition.

B. Structural Steel: ASTM A36/A36M, ASTM A690/A690M, or ASTM A992/A992M.

C. Wood Lagging: Lumber, mixed hardwood, nominal rough thickness of size and strength required for application.

D. Shotcrete: Comply with Section 033713 "Shotcrete" for shotcrete materials and mixes, reinforcement, and shotcrete application.

E. Cast-in-Place Concrete: ACI 301, of compressive strength required for application.

F. Reinforcing Bars: ASTM A615/A615M, Grade 60 (Grade 420), deformed.

G. Tiebacks: Steel bars, ASTM A722/A722M.

H. Tiebacks: Steel strand, ASTM A416/A416M.

PART 3 - EXECUTION

3.1 INSTALLATION - GENERAL

A. Locate excavation support and protection systems clear of permanent construction, so that construction and finishing of other work is not impeded.

B. Install excavation support and protection systems to ensure minimum interference with roads, streets, walks, and other adjacent occupied and used facilities.

1. Do not close or obstruct streets, walks, or other adjacent occupied or used facilities without permission from Owner and authorities having jurisdiction.
2. Provide alternate routes around closed or obstructed traffic ways if required by authorities having jurisdiction.

C. Install excavation support and protection systems without damaging existing buildings, structures, and site improvements adjacent to excavation.

3.2 TIEBACKS

A. Drill, install, grout, and tension tiebacks.

B. Test load-carrying capacity of each tieback and replace and retest deficient tiebacks.

1. Have test loading observed by a qualified professional engineer responsible for design of excavation support and protection system.

C. Maintain tiebacks in place until permanent construction is able to withstand lateral earth and hydrostatic pressures.

3.3 BRACING

A. Locate bracing to clear columns, floor framing construction, and other permanent work. If necessary to move brace, install new bracing before removing original brace.

1. Do not place bracing where it will be cast into or included in permanent concrete work unless otherwise approved by Architect.
2. Install internal bracing if required to prevent spreading or distortion of braced frames.
3. Maintain bracing until structural elements are supported by other bracing or until permanent construction is able to withstand lateral earth and hydrostatic pressures.

3.4 MAINTENANCE

A. Monitor and maintain excavation support and protection system.

B. Prevent surface water from entering excavations by grading, dikes, or other means.

C. Continuously monitor vibrations, settlements, and movements to ensure stability of excavations and constructed slopes and to ensure that damage to permanent structures is prevented.

3.5 FIELD QUALITY CONTROL

A. Survey-Work Benchmarks: Resurvey benchmarks regularly during installation of excavation support and protection systems, excavation progress, and for as long as excavation remains open.

1. Maintain an accurate log of surveyed elevations and positions for comparison with original elevations and positions.
2. Promptly notify Architect if changes in elevations or positions occur or if cracks, sags, or other damage is evident in adjacent construction.

B. Promptly correct detected bulges, breakage, or other evidence of movement to ensure that excavation support and protection system remains stable.

C. Promptly repair damages to adjacent facilities caused by installation or faulty performance of excavation support and protection systems.

3.6 REMOVAL AND REPAIRS

A. Remove excavation support and protection systems when construction has progressed sufficiently to support excavation and earth and hydrostatic pressures.

1. Remove in stages to avoid disturbing underlying soils and rock or damaging structures, pavements, facilities, and utilities.
2. Remove excavation support and protection systems to a minimum depth of 48 inches below overlying construction and abandon remainder.
3. Fill voids immediately with approved backfill compacted to density specified in Section 312000 "Earth Moving."
4. Repair or replace, as approved by Architect, adjacent work damaged or displaced by removing excavation support and protection systems.

B. Leave excavation support and protection systems permanently in place.

END OF SECTION 315000

Mead & Hunt